REV	ECN NO	DESRIPTION	DESIGN	APPROVAL	DATE
A1	NEW	Replace frame			2020.06.12

ROHS

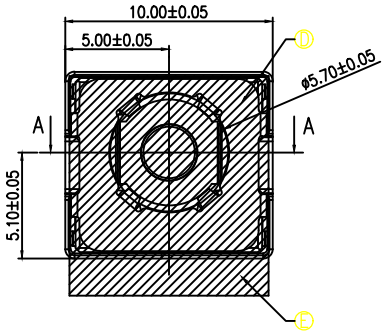

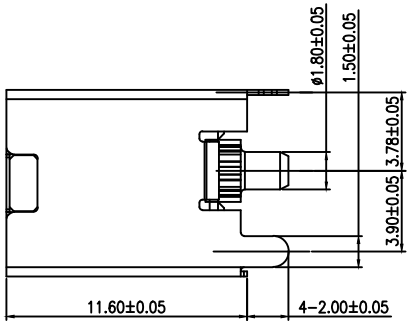

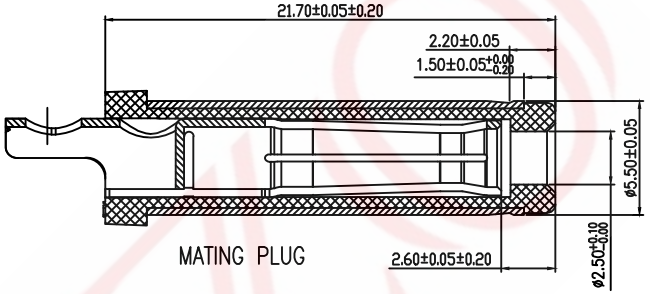

MATING PLUG

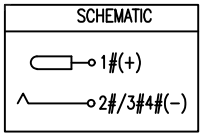

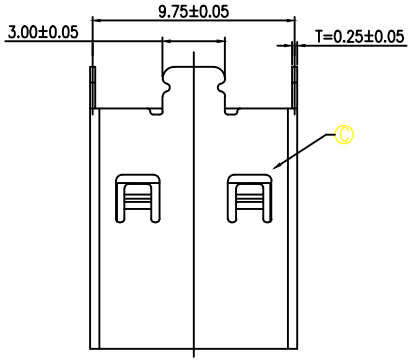

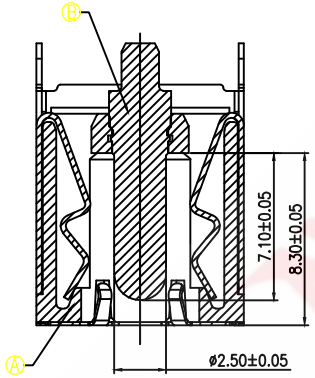

SECTION A-A

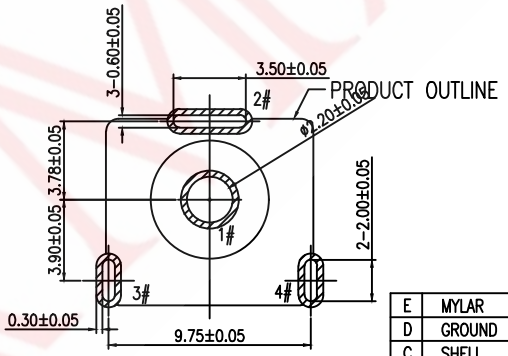

RECOMMENDED PCB LAYOUT

TOP VIEW TOLERANCE:±0.05

SPECIFICATION:

1. RATING: DC 20V 20A
2. CONTACT RESISTANCE:
   30mΩ MAX.(INITIAL)
   50mΩ MAX.(FINAL)
3. INSULATION RESISTANCE: 100 MΩ MIN.
4. WITHSTAND VOLTAGE: 500 VAC
5. INSERTION FORCE: 3N~30N
6. EXTRACTION FORCE: 3N~30N
7. DURABILITY: 5,000 CYCLES

9C L 4 116 B E G A

- Model Definition
- Mould Number: MX1074
- Needle Diameter: 2.5mm
- Fixing Method: Without Fixed Column
- Interface Method: Conventional Flared Opening
- Overall Length: 11.6mm
- Pin Position: 4 Pins
- Mounting Method: Vertical (DIP)
- Product Series: DC Power Jacks

NO.	DESCRIPTION	MATERIAL	REMARKS	QTY
E	MYLAR			1
D	GROUND	SUS 304		1
C	SHELL	COPPER ALLOY	Ni 40u"MIN.	1
B	CENTER PIN	BRASS	GOLD FLASH/Ni 40u" MIN.	1
A	HOUSING	HIGH TEMP.THERMOPLASTIC	BLACK	1

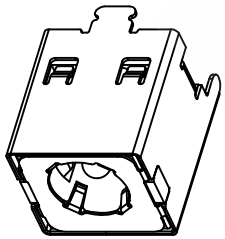

3D VIEW

DESIGN	WANGGUIFA	2018.06.12	
CHECKED	ZHENGUILAN	2018.06.12	
APPROVED	LILIANJIANG	2018.06.14	

GENERAL TOLERANCE	
⩾0~2<	±0.15
⩾2~5<	±0.25
⩾0~2<	±0.15
⩾5	±0.35

FIRST VIEW

SCALE	1:1	UNIT	mm

The copyright belongs to samzo parts [China] Co., Ltd. please use the material after samzo parts agree to authorize. The final right of interpretation belongs to samzo parts.
WWW.KKK-JP.COM

SAMZO COMPONENTS

Electronic switch and connector manufacturer

TITLE:: 20A大电流 立式插件

DWG NO: 9CL4116-A1074

PART NO: 9CL4-55251074

MODEL NO: 9CL4116BEGA

NAME: DC JACK