Jul.1.2024 Copyright 2024 HIROSE ELECTRIC CO., LTD. All Rights Reserved.
In case of consideration for using Automotive equipment / device which demand high reliability, kindly contact our sales window correspondents.

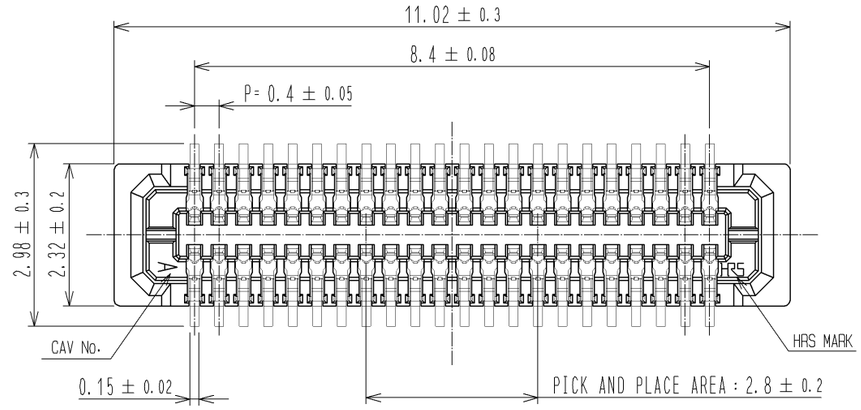

◈ RECOMMENDED PCB LAYOUT
(MOUNTING SURFACE SIDE)

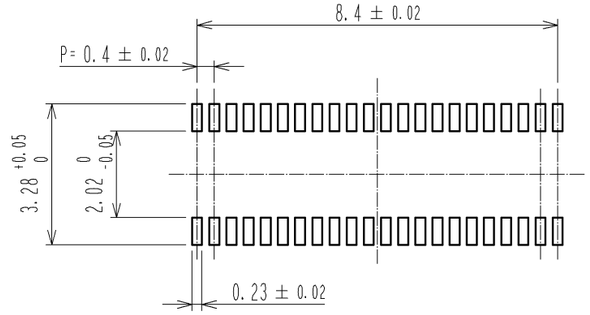

◈ RECOMMENDED METAL MASK DIMENSIONS
METAL MASK THICNESS : 0.12mm

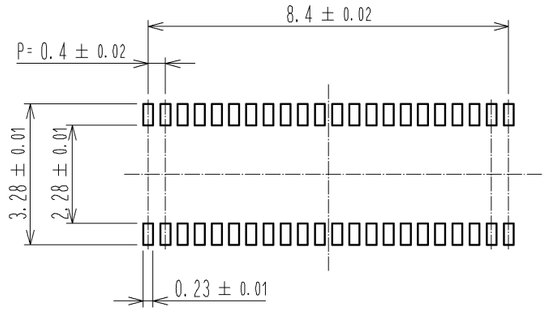

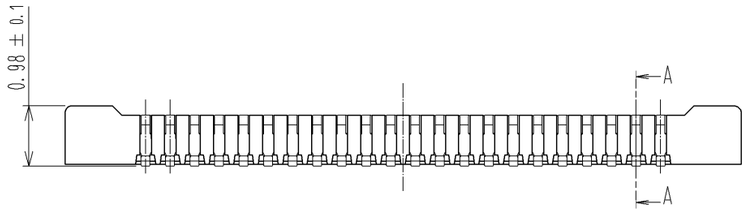

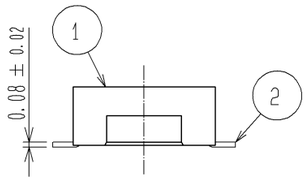

◈ RECOMMENDED METAL MASK DIMENSIONS
METAL MASK THICNESS : 0.1mm

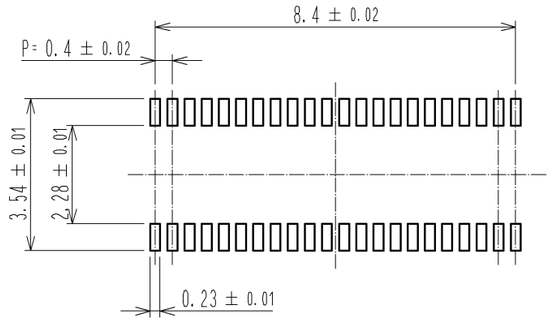

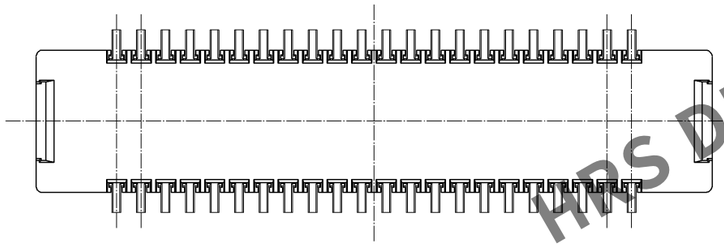

HRS DRAWING FOR REFERENCE

NOTE 1. ALL LEADS CO-PLANARITY SHALL BE 0.1 mm MAX.
2 CONTACT PLATING SPECIFICATIONS.
CONTACT AREA : GOLD 0.05μm MIN
SMT LEAD : GOLD 0.05μm MIN
UNDER PLATING : NICKEL 1μm MIN
(SURFACE : SEALING)

A-A (FREE SIZE)

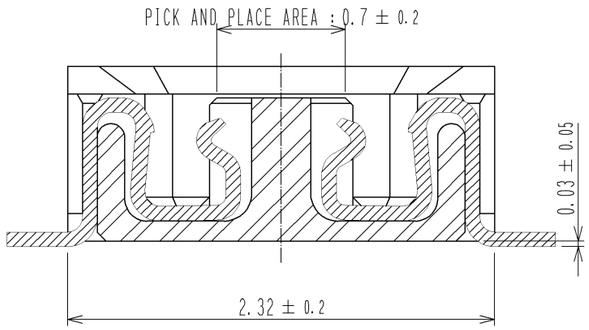

ENGAGEMENT FIGURE (FREE SIZE)

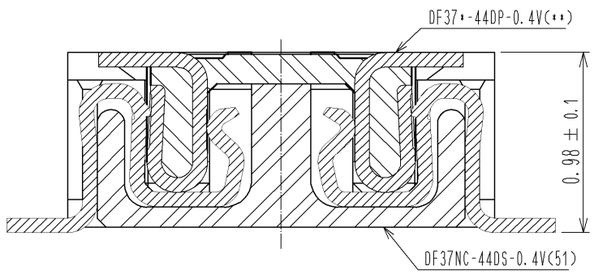

NO.	MATERIAL	FINISH , REMARKS	NO.	MATERIAL	FINISH , REMARKS
3	PS	CLEAR, EMBOSSED CARRIER TAPE	6	PS	CLEAR, REINFORCING COLLAR
2	PHOSPHOR BRONZE	2	5	PS	BLACK, PLASTIC REEL
1	LCP	BLACK, UL94V-0	4	POLYESTER	CLEAR, COVER TAPE

UNITS mm	SCALE FREE	COUNT	DESCRIPTION OF REVISIONS	DESIGNED	CHECKED	DATE

HRS HIROSE ELECTRIC CO., LTD.

APPROVED	: KH. IKEDA	12.10.03	DRAWING NO.	EDC3-336266-01
CHECED	: TS. MIYAZAKI	12.10.03	PART NO.	DF37NC-44DS-0.4V(51)
DESIGNED	: RT. SHIMIZU	12.09.27	CODE NO.	CL684-3324-1-51
DRAWN	: RT. SHIMIZU	12.09.27		1/2

FORM HC0011-5-7

Jul.1.2024 Copyright 2024 HIROSE ELECTRIC CO., LTD. All Rights Reserved.
In case of consideration for using Automotive equipment / device which demand high reliability, kindly contact our sales window correspondents.

EMBOSSED CARRIER TAPE PACKAGING (FREE SIZE)

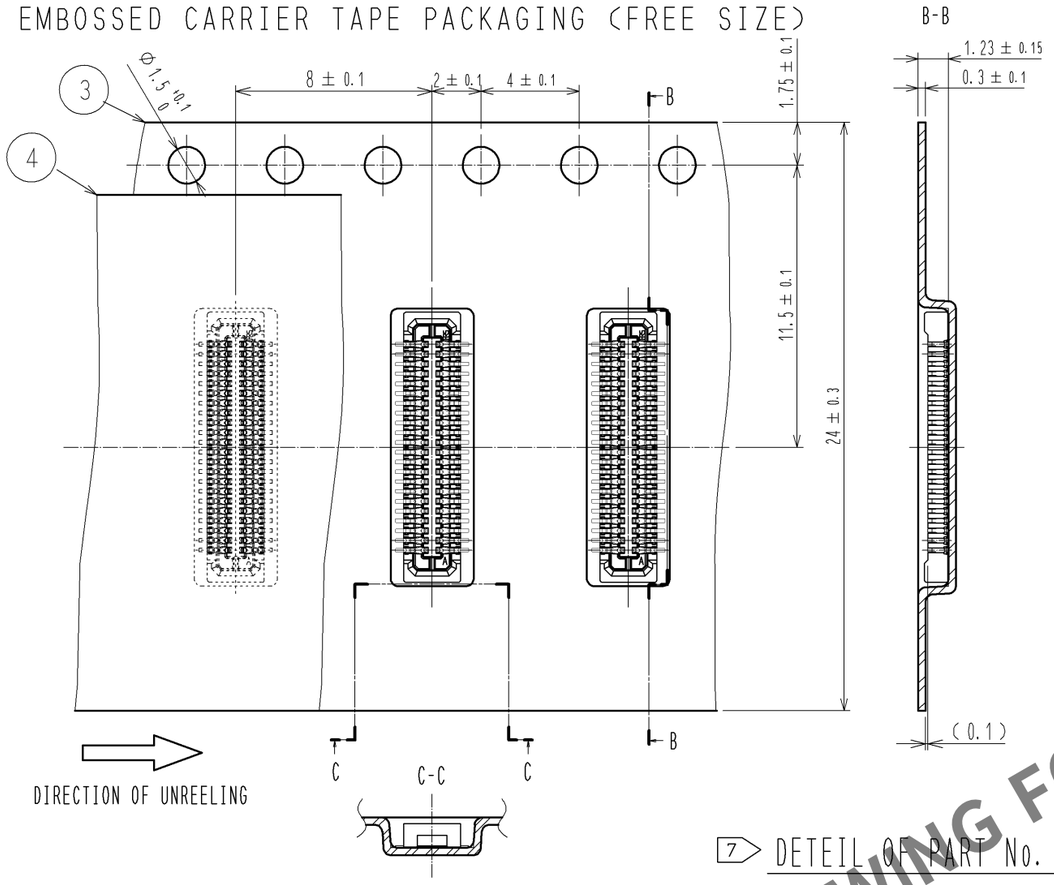

3 RECOMMENDED REFLOW TEMPERATURE PLOFILE USING LEAD-FREE SOLDER PASTE.

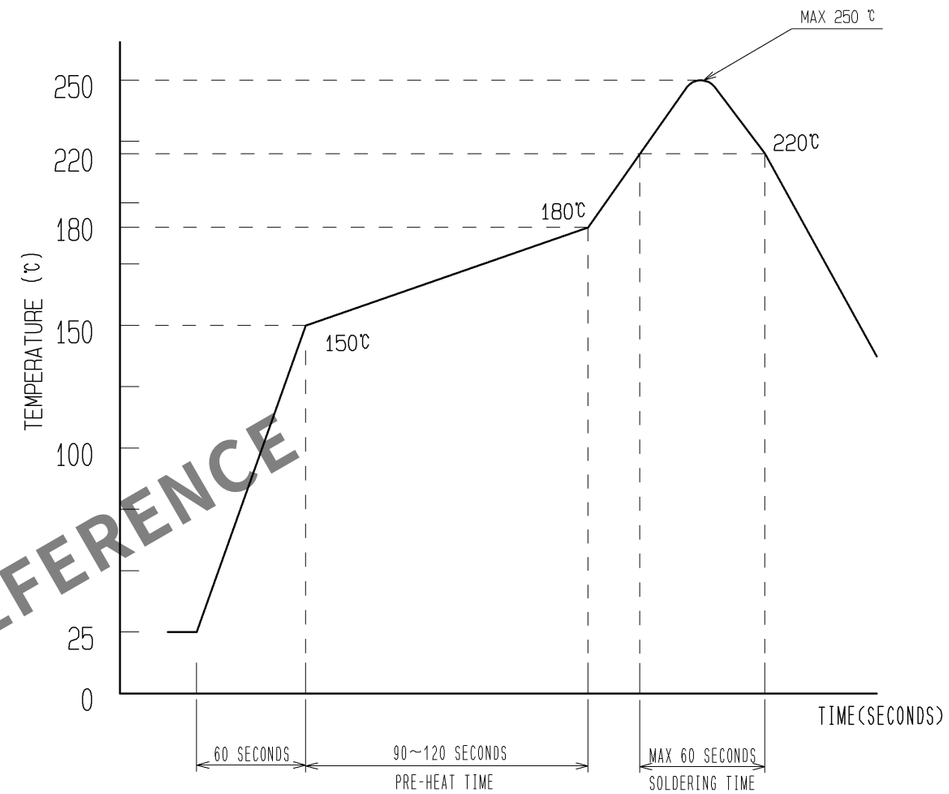

1) REFLOW TIME
REFLOW METHOD: IR REFLOW
NUMBER OF REFLOW CYCLES: 2 CYCLES MAX.
DURATION ABOVE 220 ℃, 60 SEC. MAX.
(PEAK TEMPERATURE: 250℃ MAX.)

2) PRE-HEAT TIME
PRE-HEAT TEMPERATURE(MIN) :150 ℃
PRE-HEAT TEMPERATURE(MAX) :180 ℃
PRE-HEAT TIME : 90~120 sec.

7 DETEIL OF PART No. LABEL

SUPPLIER
QUANTITY
PART NO.
CODE NO.
DATE OF MANUFACTURED

製造年月日	年　月　日
製品コード	CL684-3324-1-51
製品名	DF37NC-44DS-0.4V(51)
数量	8000個
納入者	ヒロセ電機(株)

STYLE AND DIMENSION OF REEL (FREE SIZE)

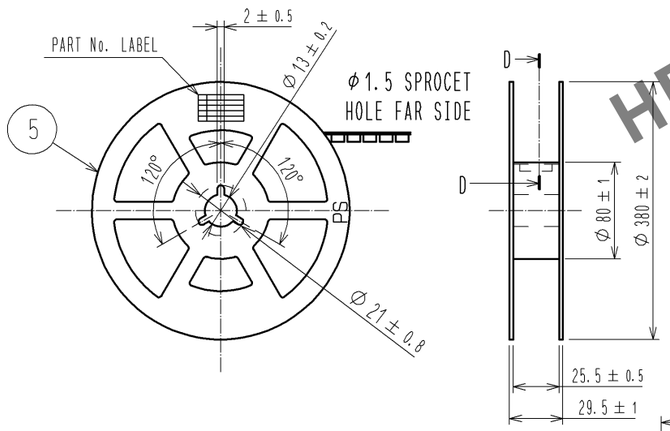

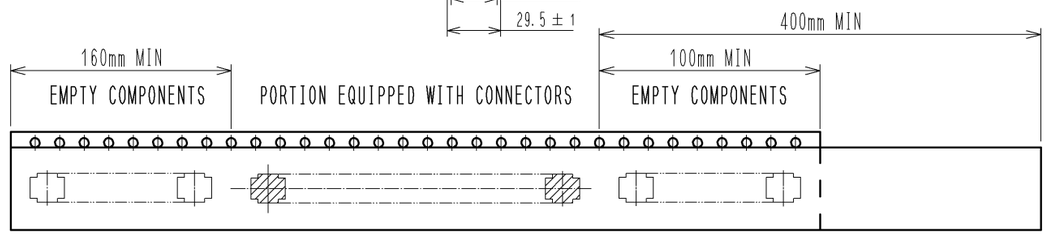

6 TAPING(FREE)

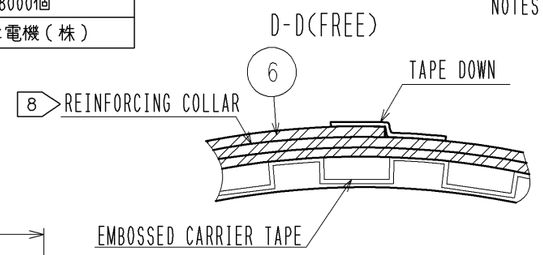

NOTES 3 THIS TEMPERATURE PROFILE IS PER THE CONDITIONS SHOWN ABOVE. ADDITIONAL FACTORS. SUCH AS SOLDER PASTE TYPE. PCB SIZE AND OTHER MOUNTED COMPONENTS COULD AFFECT THE PROFILE. THEREFORE. A THOROUGH EVALUATION OF MOUNTING CONDITION IS REQUIRED PRIOR TO PRODUCTION. TEMPERATURE IS MEASURED AT CONTACT LEAD.

4. PER REEL 8000 CONNECTORS.
5. THE DIMENSIONS IN PARENTHESES ARE FOR REFERENCE.

6 REFER TO JIS C 0806-3 OR IEC 60286-3
(PACKING OF COMPONENTS FOR AUTOMATIC HANDLING)

7 DETAIL OF PART NO. LABEL IS WRITTEN IN JAPANESE.

8 AFTER FINISHING THE REELING. COVER THE SURFACE WITH 2 METERS OF REINFORCING COLLAR AND THE DOWN AT THE END.

HRS DRAWING FOR REFERENCE

HRS	
DRAWING NO.	EDC3-336266-01
PART NO.	DF37NC-44DS-0.4V(51)
CODE NO.	CL684-3324-1-51 △ 2/2