INDEX

PAGE TITLE	PAGE
TITLE BLOCK	1
REVISION BLOCK	2
PART BLOCK	3
KPC BLOCK	4
COMPONENT TABLE	5
NOTES	6
NOTES	7
WIRE DRESS PACKAGING DIMENSIONS	8
LOCATION AND PACKAGING DIMENSIONS REFERENCING INTERFACE DATUMS B & C	9
LOCATION AND PACKAGING DIMENSIONS REFERENCING INTERFACE DATUM A	10
KEY ID REF - WIRE DRESS OPTION 0	11
KEY ID REF - WIRE DRESS OPTION 9	12
CIRCUIT CONFIGURATIONS	13
CIRCUIT CONFIGURATIONS	14
COMPONENT CONNECTOR INTERFACE	15
COMPONENT CONNECTOR INTERFACE	16
COMPONENT CONNECTOR INTERFACE	17
COMPONENT CONNECTOR INTERFACE	18
COMPONENT CONNECTOR INTERFACE	19
COMPONENT CONNECTOR INTERFACE	20
COMPONENT CONNECTOR INTERFACE	21
COMPONENT CONNECTOR INTERFACE	22

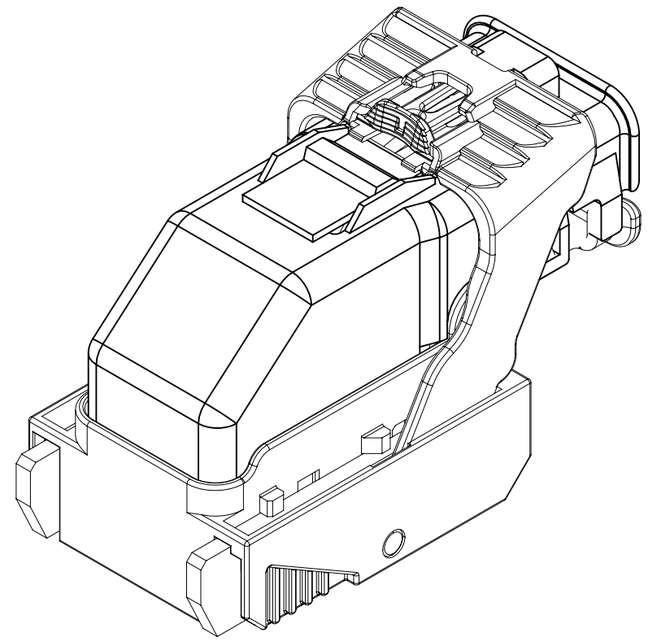

ISO VIEW

GM

THIS DOCUMENT IS IN ACCORDANCE WITH ASME Y14.5M-1994 AS AMENDED BY THE GM GLOBAL DIMENSIONING AND TOLERANCING ADDENDUM - 2004.

UG

CHANGE RESTRICTED
NO MANUAL CHANGES

DO NOT SCALE

METRIC

DIMENSIONS SHOWN IN MILLIMETERS UNLESS OTHERWISE SPECIFIED

REFERENCE
12H (MOLEX AUTOMOTIVE)

		DATE
DRAFTER	D. KOEHLER	28AP15
APVD1	M.R. OOSTERINK	29AP15
APVD2	J. SWARTZ	29AP15
APVD3	G. FLECK	08MY15
APVD4		
APVD5		

DRAWING NAME
HARNESS CONN ASM-SEALED
18/49/56 CKTS, MX123

DRAWING NUMBER
12642694

DWG STATUS		
ST	REV	PDI
R	001	

PAGE NUMBER
1 OF 22

PAGE	DWG STATUS					REVISION HISTORY	AUTH	DR	CK	ENG
	DATE	ST	REV	CHG	PDI					
	08MY15	R	001			RELEASED TO PRODUCTION AT DLS A	CRMRJD	DFK	MRO	GF

GM	PAGE TITLE REVISION BLOCK		DRAWING NUMBER 12642694	DWG STATUS ST: R REV: 001 PDI:		PAGE NUMBER 2 OF 22	

HIERARCHY /QUANTITY	DWG ITM	DWG RLTN SHIP	PART NUMBER	P-A ITM	DLS	ST	REV	PDI	NMCI	MASS (KG)	PART NAME	NOTES
	30	RD	12582679			C	006			0.009	WIRE HARNESS COVER	18/49/56 WAY
	29	RD	AVA77143			C	002			0.041	HARN CONN ASM 56 CKT	KEY M OPTION 9
	28	RD	AVA77193			C	002			0.041	HARN CONN ASM 56 CKT	KEY L OPTION 9
	27	RD	AVA77192			C	002			0.041	HARN CONN ASM 56 CKT	KEY K OPTION 9
	26	RD	12615659			C	004			0.041	HARN CONN ASM 56 CKT	KEY J OPTION 9
	25	RD	12603601			C	003			0.041	HARN CONN ASM 56 CKT	KEY H OPTION 9
	24	RD	12603600			C	004			0.041	HARN CONN ASM 56 CKT	KEY G OPTION 9
	23	RD	AVA77168			C	004			0.041	HARN CONN ASM 56 CKT	KEY M OPTION 0
	22	RD	AVA77167			C	004			0.041	HARN CONN ASM 56 CKT	KEY L OPTION 0
	21	RD	AVA77166			C	003			0.041	HARN CONN ASM 56 CKT	KEY K OPTION 0
	20	RD	12615658			C	004			0.041	HARN CONN ASM 56 CKT	KEY J OPTION 0
	19	RD	12582681			C	004			0.041	HARN CONN ASM 56 CKT	KEY H OPTION 0
	18	RD	12582680			2	008			0.041	HARN CONN ASM 56 CKT	KEY G OPTION 0
	17	RD	12615665			C	004			0.040	HARN CONN ASM 49 CKT	KEY F OPTION 9
	16	RD	12615664			C	004			0.040	HARN CONN ASM 49 CKT	KEY E OPTION 9
	15	RD	12615663			C	004			0.040	HARN CONN ASM 49 CKT	KEY D OPTION 9
	14	RD	12666121			C	003			0.040	HARN CONN ASM 49 CKT	KEY C OPTION 9
	13	RD	12650787			C	001			0.040	HARN CONN ASM 49 CKT	KEY B OPTION 9
	12	RD	12666119			C	003			0.040	HARN CONN ASM 49 CKT	KEY A OPTION 9
	11	RD	12615662			C	003			0.040	HARN CONN ASM 49 CKT	KEY F OPTION 0
	10	RD	12615661			C	003			0.040	HARN CONN ASM 49 CKT	KEY E OPTION 0
	09	RD	12615660			C	004			0.040	HARN CONN ASM 49 CKT	KEY D OPTION 0
	08	RD	12666120			C	003			0.040	HARN CONN ASM 49 CKT	KEY C OPTION 0
	07	RD	12650786			C	001			0.040	HARN CONN ASM 49 CKT	KEY B OPTION 0
	06	RD	12666118			C	002			0.040	HARN CONN ASM 49 CKT	KEY A OPTION 0
	05	RD	12644159			C	003			0.044	HARN CONN ASM 18 CKT	KEY H OPTION 9
	04	RD	12644157			C	003			0.044	HARN CONN ASM 18 CKT	KEY G OPTION 9
	03	RD	12644158			C	003			0.044	HARN CONN ASM 18 CKT	KEY H OPTION 0
	02	RD	12644156			C	003			0.044	HARN CONN ASM 18 CKT	KEY G OPTION 0
	01	RD	12642694		A	2	001			1.285	HARNESS CONN ASM-SEALED 18/49/56CKTS,MX123	
											DRAWING	

PARTS SHOWN ON DRAWING

	PAGE TITLE	DRAWING NUMBER	DWG STATUS			PAGE NUMBER
GM	PART BLOCK	12642694	ST	REV	PDI	3 OF 22
			R	001		

KEY PRODUCT CHARACTERISTICS
(IN ACCORDANCE WITH QN 1805 OR ON 1050)

▽ SAFETY/COMPLIANCE	TOTAL ON DRAWING	5
◇ FIT/FUNCTION	LAST NO. USED	5

NO	TYPE	DESCRIPTION	RATIONALE	PAGE/ZONE
1	F/F	32.68	IMPROVE CONNECTOR SYSTEM MATING	16
2	F/F	29.00	INSURE PROPER RELEASE OF LEVER	16
3	F/F	15.25	INSURE FINAL MATE POSITION	17
5	F/F	POSITIONAL TOLERANCE (2 PLACES)	INSURE CONNECTOR SYSTEM MATIBILITY	20

					APPLICABLE COMPONENTS					
Line	MFG.	MFG. P/N	GM P/N	Effective Date	DESCRIPTION	Key Option	Wire Dress Option	Key Config.	Color	Status
1	Molex	34575-0003	12582679	02JN03	WIRE HARNESS COVER	N/A	NA	N/A	BLACK	AVAILABLE
2	Molex	34576-0103	12666118	31JL15	HARN CONN ASM 49 CKT	A	0	1458	BLACK	ACTIVE
3	Molex	34576-0203	12650786	T.B.D.	HARN CONN ASM 49 CKT	B	0	1468	ST GRAY	NOT ACTIVE
4	Molex	34576-0303	12666120	31JL15	HARN CONN ASM 49 CKT	C	0	2467	BLUE	ACTIVE
5	Molex	34576-0403	12615660	T.B.D.	HARN CONN ASM 49 CKT	D	0	2367	BROWN	NOT ACTIVE
6	Molex	34576-0503	12615661	T.B.D.	HARN CONN ASM 49 CKT	E	0	2468	GREEN	NOT ACTIVE
7	Molex	34576-0603	12615662	T.B.D.	HARN CONN ASM 49 CKT	F	0	1357	NATURAL	NOT ACTIVE
8	Molex	34576-0703	12582680	11JN04	HARN CONN ASM 56 CKT	G	0	1358	BLUE	AVAILABLE
9	Molex	34576-0803	12582681	11JN04	HARN CONN ASM 56 CKT	H	0	2458	ST GRAY	AVAILABLE
10	Molex	34576-0903	12615658	T.B.D.	HARN CONN ASM 56 CKT	J	0	2457	BLACK	NOT ACTIVE
11	Molex	34576-1003	AVA77166	T.B.D.	HARN CONN ASM 56 CKT	K	0	2357	BROWN	NOT ACTIVE
12	Molex	34576-1103	AVA77167	T.B.D.	HARN CONN ASM 56 CKT	L	0	2368	GREEN	NOT ACTIVE
13	Molex	34576-1203	AVA77168	T.B.D.	HARN CONN ASM 56 CKT	M	0	2358	NATURAL	NOT ACTIVE
14	Molex	34576-1303	12666119	31JL15	HARN CONN ASM 49 CKT	A	9	1458	BLACK	ACTIVE
15	Molex	34576-1403	12650787	T.B.D.	HARN CONN ASM 49 CKT	B	9	1468	ST GRAY	NOT ACTIVE
16	Molex	34576-1503	12666121	31JL15	HARN CONN ASM 49 CKT	C	9	2467	BLUE	ACTIVE
17	Molex	34576-1603	12615663	T.B.D.	HARN CONN ASM 49 CKT	D	9	2367	BROWN	NOT ACTIVE
18	Molex	34576-1703	12615664	T.B.D.	HARN CONN ASM 49 CKT	E	9	2468	GREEN	NOT ACTIVE
19	Molex	34576-1803	12615665	T.B.D.	HARN CONN ASM 49 CKT	F	9	1357	NATURAL	NOT ACTIVE
20	Molex	34576-1903	12603600	11JN04	HARN CONN ASM 56 CKT	G	9	1358	BLUE	AVAILABLE
21	Molex	34576-2003	12603601	T.B.D.	HARN CONN ASM 56 CKT	H	9	2458	ST GRAY	NOT ACTIVE
22	Molex	34576-2103	12615659	T.B.D.	HARN CONN ASM 56 CKT	J	9	2457	BLACK	NOT ACTIVE
23	Molex	34576-2203	AVA77192	T.B.D.	HARN CONN ASM 56 CKT	K	9	2357	BROWN	NOT ACTIVE
24	Molex	34576-2303	AVA77193	T.B.D.	HARN CONN ASM 56 CKT	L	9	2368	GREEN	NOT ACTIVE
25	Molex	34576-2403	AVA77143	T.B.D.	HARN CONN ASM 56 CKT	M	9	2358	NATURAL	NOT ACTIVE
26	Molex	34851-0007	12644156	31AU15	HARN CONN ASM 18 CKT	G	0	1358	BLUE	ACTIVE
27	Molex	34851-0008	12644158	31AU15	HARN CONN ASM 18 CKT	H	0	2458	ST GRAY	ACTIVE
28	Molex	34851-0019	12644157	31AU15	HARN CONN ASM 18 CKT	G	9	1358	BLUE	ACTIVE
29	Molex	34851-0020	12644159	31AU15	HARN CONN ASM 18 CKT	H	9	2458	ST GRAY	ACTIVE
30	Molex	34736-2002	12642697	01AU10	MX64 RCPT TERM Ag 18/20 GAGE B (RIGHT PAYOFF)	N/A	N/A	N/A	N/A	AVAILABLE
31	Molex	34736-2001	12642696	01AU10	MX64 RCPT TERM Ag 22 GAGE B (RIGHT PAYOFF)	N/A	N/A	N/A	N/A	AVAILABLE
32	Molex	34586-0001	T.B.D.	11JN04	MX123 0.64MM GROMMET PLUG	N/A	N/A	N/A	NATURAL	AVAILABLE
33	Yazaki	7116-4150-02	12588066	02JN03	2.8mm YESC SEALED FEMALE TERMINAL TIN 20/22 GAGE (CABLE RANGE 0.30mm-0.60mm)	N/A	N/A	N/A	N/A	NOT ACTIVE
34	Yazaki	7116-4151-02	12588067	02JN03	2.8mm YESC SEALED FEMALE TERMINAL TIN 16/18 GAGE (CABLE RANGE 0.75mm-1.40mm)	N/A	N/A	N/A	N/A	NOT ACTIVE
35	Yazaki	7116-4152-02	12582685	02JN03	2.8mm YESC SEALED FEMALE TERMINAL TIN 14 GAGE (CABLE RANGE 1.50mm-2.50mm)	N/A	N/A	N/A	N/A	AVAILABLE
36	Yazaki	7158-3111-60	12588068	02JN03	2.8mm CABLE SEAL (wire O.D. range 1.20mm-1.90mm)	N/A	N/A	N/A	GREEN	NOT ACTIVE
37	Yazaki	7158-3112-70	12588069	02JN03	2.8mm CABLE SEAL (wire O.D. range 1.80mm-2.30mm)	N/A	N/A	N/A	YELLOW	NOT ACTIVE
38	Yazaki	7158-3113-40	12582686	02JN03	2.8mm CABLE SEAL (wire O.D. range 2.18mm-3.00mm)	N/A	N/A	N/A	WHITE	AVAILABLE
39	Yazaki	7158-3114-90	T.B.D.	02JN03	2.8mm YESC CAVITY PLUG	N/A	N/A	N/A	BLUE	AVAILABLE
40	FCI	33140138	12646399	10JA14	6.35mm APEX RCPT TERM Sn/Ag GRIP CODE-10 (6mm2) - Greased	N/A	N/A	N/A	N/A	AVAILABLE
41	FCI	33140135	12654556	10JA14	6.35mm APEX RCPT TERM Sn/Ag GRIP CODE-TBD (1mm2) - Greased	N/A	N/A	N/A	N/A	AVAILABLE
42	QSR	A-0549C	12646688	01SE14	6.35mm CABLE SEAL (FOR 6.0mm2 WIRE SIZE - 3.6 TO 4.2mm INSULATION OD)	N/A	N/A	N/A	WHITE	AVAILABLE
43	QSR	A-0549B	12654557	01SE14	6.35mm CABLE SEAL (FOR 0.75-1.25mm2 WIRE SIZE - 1.8 TO 2.3mm INSULATION OD)	N/A	N/A	N/A	BLUE	AVAILABLE
44	Molex	63811-4200	XX019825	02JN03	MX64 TERM HAND CRIMP TOOL	N/A	N/A	N/A	N/A	AVAILABLE
45	Molex	63813-1400	XX019826	02JN03	MX64 TERM SERVICE TOOL	N/A	N/A	N/A	N/A	AVAILABLE
46	Molex	63865-8000	XX019827	02JN03	MX64 CRIMP APPLICATOR with TOOL KIT 18/20 GAGE PAYOFF DIRECTION D (left payoff) (contact Molex for payoff detail)	N/A	N/A	N/A	N/A	AVAILABLE
47	Molex	63865-8070	XX019828	02JN03	MX64 APPLICATOR TOOL KIT 18/20 GAGE	N/A	N/A	N/A	N/A	AVAILABLE
48	Molex	63865-8100	XX019829	02JN03	MX64 CRIMP APPLICATOR with TOOL KIT 22 GAGE PAYOFF DIRECTION D (left payoff) (contact Molex for payoff detail)	N/A	N/A	N/A	N/A	AVAILABLE
49	Molex	63865-8170	XX019830	02JN03	MX64 APPLICATOR TOOL KIT 22 GAGE	N/A	N/A	N/A	N/A	AVAILABLE
50	SPX	J35616-64	T.B.D.	02JN03	0.64mm PROBE TOOL (for rcpt)	N/A	N/A	N/A	N/A	AVAILABLE
51	SPX	J35616-64A	T.B.D.	02JN03	0.64mm PROBE TOOL WITH EXT (for rcpt)	N/A	N/A	N/A	N/A	AVAILABLE
52	SPX	J35616-65	T.B.D.	02JN03	0.64mm PROBE TOOL WITH EXT (for pin)	N/A	N/A	N/A	N/A	AVAILABLE
53	SPX	J35616-4A	T.B.D.	02JN03	2.8mm PROBE TOOL (for rcpt)	N/A	N/A	N/A	N/A	AVAILABLE
54	YAZAKI	X39899-J374	12094430	02JN03	2.8mm TERM SERVICE TOOL	N/A	N/A	N/A	N/A	AVAILABLE
55	TQI	7000-1001	N/A	01FE15	18CKT PASS THROUGH ADAPTERS	N/A	N/A	N/A	BLACK	AVAILABLE
56	TQI	7000-1004	N/A	01FE15	49CKT PASS THROUGH ADAPTERS	N/A	N/A	N/A	BLACK	AVAILABLE
57	TQI	79917-0060	N/A	02JA08	56CKT PASS THROUGH ADAPTERS	N/A	N/A	N/A	BLACK	AVAILABLE
58	Molex	63813-1500	J-38125-217	01SE14	6.35mm APEX TERM SERVICE TOOL	N/A	N/A	N/A	N/A	AVAILABLE

* MX123 WIRE HARNESS COVER MATES TO ANY 18/49/56 CKT MX123 HARN CONN ASSY SHOWN ON THIS TABLE

NOTES: UNLESS OTHERWISE SPECIFIED

1. MATERIAL FOR INTERFACE:

A. RESIN:
   1. 30% G.F. PBT; 20% MAX. (BY WEIGHT) REGRIND.
   2. MATING CONNECTOR INTERFACE PART COLOR MUST BE SAME AS MATCHING KEYED HARNESS CONNECTOR ASSEMBLY.
   3. MUST BE VALIDATED FOR INDIVIDUAL DEVICE APPLICATION REQUIREMENTS.

B. 0.64MM PINS:
   1. BASE MATERIAL: COPPER ALLOY; CONDUCTIVITY >= 28% IACS AT 20°C; TENSILE STRENGTH >= 635 N/mm²;SURFACE ROUGHNESS R_a 6 MAX.
   2. PLATING FINISH: SILVER (Ag). PLATING TO BE 1.9-3.3 um ELECTRODEPOSITED SEMI-BRIGHT SILVER OVER 1.25-2.25 um DUCTILE SULPHAMATE NICKEL PER NOTE 1(D).
   3. ANTI-TARNISH: SYNTHETIC HYDROCARBON CONTACT SURFACE FINISH OR EQUIVALENT APPLIED WITHOUT VOID TO CONTACT AREA (MIN 3.7mm FROM PIN TIP).

C. 2.8MM BLADE:
   1. BASE MATERIAL: COPPER ALLOY; CONDUCTIVITY>= 28% IACS AT 20°C; TENSILE STRENGTH >= 350 N/mm²; SURFACE ROUGHNESS R_a 6 MAX.
   2. PLATING FINISH: TIN. PLATING TO BE 2.5-5.0 um ELECTRODEPOSITED TIN, MATTE FINISH OVER 1.25-2.5um DUCTILE SULPHAMATE NICKEL PER NOTE 1(D).

D. 6.3MM BLADE:
   1. BASE MATERIAL: COPPER ALLOY; CONDUCTIVITY>= 50% IACS AT 20°C;
   2. PLATING FINISH: SILVER (Ag) PLATING TO BE 1.9-3.3 um ELECTRODEPOSITED SEMI-BRIGHT SILVER, OVER 1.25-2.5um DUCTILE SULPHAMATE NICKEL PER NOTE 1(D) WITH ENVIRONMENTAL BARRIER
      OR
      TIN/SILVER (ELECTRO-DEPOSITED), UNDERPLATE 0.5-2.0 um NICKEL OR COPPER.
      TOP PLATING: 1.0-3.0 um (SILVER RANGE 3.75-X.XX NO ANTI-TARNISH COATING REQUIRED).

E. PLATING REQUIREMENTS:

   1. SILVER PLATING
      a. 99.5% PURE SEMI-BRIGHT WITH NO ORGANIC BRIGHTNERS OR CHROMATES.

   2. NICKEL PLATING
      a. ELECTRODEPOSITED DUCTILE SULFAMATE NICKEL WITH A NON-BRIGHTENED FINISH. NO ORGANIC OR BRIGHTENING AGENTS SHALL BE ALLOWED.
      b. SHALL ONLY BE USED AS AN UNDERLYING PLATING AND MAY NOT BE USED AS AN ELECTRICAL CONTACT SURFACE PLATING.
      c. SHALL BE NODULE FREE WHEN VIEWED AT 10X MAGNIFICATION IN MEASURED IN CONTACT SURFACE AREA PLUS 0.5MM PERIMETER AROUND THE CONTACT SURFACE AREA.
      d. ALL PLATINGS SHALL HAVE A 1.0% MAXIMUM BY WEIGHT IMPURITIES. IMPURITIES ARE DEFINED AS ALL ELEMENTS NOT THE PRIMARY PLATING OR HARDENING AGENT IF APPLICABLE, AS DETERMINED BY WET CHEMICAL ANALYSIS OR AUGER METHOD. NO SINGLE IMPURITY SHALL EXCEED 0.1% MAXIMUM BY WEIGHT.

   3. TESTING
      a. THICKNESS TO BE MEASURED IN CONTACT SURFACE AREA PLUS 0.5MM PERIMETER AROUND THE CONTACT SURFACE AREA AS DESIGNATED IN THE DRAWING. THICKNESS SHALL BE DETERMINED BY METHOD OF X-RAY (XRF).
      b. PLATING ADHESION SHALL BE TESTED BY A BEND TEST FOR ALL METALS. THE TEST SAMPLE SHALL BE BENT 90 DEGREES TO DETERMINE DEPOSIT ADHESION. TESTING SHALL BE COMPLETED IN ACCORDANCE WITH ASTM SPEC B571.

2. DESIGN - GENERAL:

A. THIS IS A 100% CAD GENERATED PART. THE CAD MATHEMATICAL DATA IS THE MASTER FOR THIS PART. WHERE DIMENSIONS ARE SPECIFIED ON THE DRAWING, THE DRAWING IS THE AUTHORITY FOR DIMENSIONAL VALUES. FOR DIMENSIONAL OR ANY INFORMATION NOT SHOWN ON THIS DRAWING, ANALYZE THE CAD MODEL.
B. DIMENSIONS OBTAINED FROM THE DIGITAL MODEL ARE BASIC:
   1. FOR RELATIONSHIPS BETWEEN FEATURES WHEN ESTABLISHED BY GEOMETRIC TOLERANCES.
   2. FOR THE FORM OF A FEATURE WHEN CONTROLLED BY A PROFILE TOLERANCE.
   3. FOR THE SIZE, FORM AND/OR RELATIONSHIP BETWEEN FIXED DATUM TARGETS.
C. DIMENSIONS OBTAINED FROM THE DIGITAL MODEL ARE ROUNDED TO TWO DECIMAL PLACES (PER IEEE/ASTM SI 10-2002)
D. VIEWS AND SECTIONS ON THIS DRAWING ARE IN ACCORDANCE WITH GM DCS SECTION C3.
E. THE DIGITAL MODEL MUST CORRESPOND TO THE RELEASE LEVEL SHOWN IN THE PART BLOCK ON THIS DOCUMENT.
F. TOLERANCES:
   1. LINEAR 0.X ± 0.30
              0.XX ± 0.10
              0.XXX ± 0.10
   2. ANGULAR X° ± 3°
   3. ⌓ | 1.0 | A | B | C
G. MINIMUM WALL THICKNESS REQUIRED: 1.3mm.
H. CORNERS SHOWN AS SHARP TO BE R 0.2 MAX.
J. LETTERING SHALL BE 0.15 MAX RAISED IN 0.20 MAX RECESS PAD. THIS INCLUDES MATERIAL CODE, RECYCLING CODE, CAVITY ID AND DATE CODE.
K-1. PARTS MUST BE FREE OF DISCOLORATION, SALT RESIDUE AND OTHER IMPERFECTIONS THAT AFFECT FIT OR FUNCTION.
K-2. SCRATCHES OR DENTS NOT TO EXCEED 0.013mm IN DEPTH.
L. FOLLOWING PRODUCTION CODES TO BE PERMANENTLY MARKED & HUMAN READABLE TO A LETTER HEIGHT OF 1.5 ±0.5MM X 0.3 MAX DEEP
   1. MATERIAL #: XXXXX-XXXX
   2. DATE CODE: JJJY (JULIAN DAY, LAST DIGIT OF YEAR)
   3. INSPECTION MACHINE CODE + SERIAL #: X_XXXXX

3. DESIGN - MANUFACTURING:

A. DRAFT TO BE WITHIN TOLERANCE.
B. ALLOWABLE FLASH MAX 0.2 HIGH X MAX 0.13 THICK.
C. ALLOWABLE PARTING LINE MISMATCH 0.2 MAX.
D. EJECTOR PINS MARK TO BE FLUSH TO 0.25 MAX DEPRESSED.
E. ALLOWABLE GATE VESTIGE FLUSH TO 0.25 MAX PROTRUSION.
F. NO EXTERNAL MOLD RELEASE AGENT ALLOWED DURING MANUFACTURING.
G. STEEL THAT FORMS THE INDICATED SURFACE MUST BE POLISHED WITH A DIAMOND FINISH (SPI A-2) OVER THE FULL PERIPHERY OF THE TOOL. SURFACE MUST HAVE NO MISMATCH.
H. ANY PROCESS LUBRICANT REMAINING ON THE TERMINAL MUST NOT VARNISH OR DEGRADE IT'S ELECTRICAL PERFORMANCE UP TO A MAXIMUM CLASS AMBIENT TEMPERATURE PER SAE USCAR-2 FOR 1008 HOURS. PROCESS LUBRICANTS SHOULD BE APPROVED BY THE RESPONSIBLE ENGINEER.
J. OPTIONAL FEATURES PROVIDED FOR AUTOMATION.
K. PART MUST BE FREE FROM BURRS AND SHARP EDGES, WHICH MIGHT BE DETRIMENTAL TO SATISFACTORY ASSEMBLY, SAFE HANDLING OR FUNCTION OF PART.
L. PARTS AS DELIVERED TO ASSEMBLY SHALL BE CLEAN AND FREE OF DEBRIS, RESIDUAL ABRASIVE MATERIAL AND CORROSION PRODUCTS ADVERESLY AFFECTING FUNCTION OR APPEARENCE.
M. RESTRICTED AND REPORTABLE SUBSTANCES FOR PARTS PER GMW3059.

NOTES: UNLESS OTHERWISE SPECIFIED

4. SYSTEM REQUIREMENTS:

   A. HARNESS CONNECTOR IS COMPATIBLE WITH THE FOLLOWING WIRE SIZE NO'S:
      SAE 14AWG, MEETING SAE J1128
      SAE 18AWG, MEETING SAE J1128, MAX O.D. OF 2.06 MM
      SAE 20AWG, MEETING SAE J1128
      SAE 22AWG, MEETING SAE J1128, MIN O.D. OF 1.47 MM
      ISO 6mm², FLR2X-A/T-125 PER GM 15626 (FEB 2008)

   B. CABLE TIE SPECIFICATIONS:
      1. CABLE TIE:
         TENSILE RATING: 220N / (50lbs) MIN
         TIE LENGTH: 186mm MIN
         TIE WIDTH: 4.75mm MAX
         MATERIAL: NYLON
      2. INSTALLATION:
         CABLE TIE TENSION: 190N MIN
      3. DRESSED WIRE BUNDLE PACKAGING: SEE FIG. 1

   C. WHEN MATED WITH COMPONENT CONNECTOR INTERFACE AND/OR DRESS COVER, HARNESS CONNECTOR SYSTEM CONFORMS TO THE FOLLOWING:
      1. SAE/USCAR-2, REV: 3 APRIL, 2001; CLASS 3
      2. FIELD CORRELATED LIFE TEST, SAE/USCAR-20, NOV. 2001
      3. GMW #3191 AUGUST 22, 2000 (DRAFT); TEMPERATURE CLASS 3 (145°C), SEALING CLASS 1 (HIGH PRESSURE SPRAY), VIBRATION CLASS 2 (ON BODY)
      4. TPA USER FORCES (FULLY POPULATED WITH TERMINALS)
         a. REMOVAL FROM LOCK TO PRE-SET: <=120N

   D. WIRE SPECIFICATIONS:
      1. WIRE SURFACE MUST BE FREE OF SCRATCHES, GROOVES OR DENTS WHERE FUNCTIONAL

5. TERMINAL CURRENT RATINGS:

   ALL TESTING DONE IN ACCORDANCE WITH USCAR-2 REV5 SECTION 5.3

   A. MX64 RCPT TERM
      1. MX64 RCPT TERM Ag 18/20 GAGE CRIMPED TO SAE WIRE SIZE NO.18 AND MATED TO MX123 0.64MM PIN: 11.3 AMPS
      2. MX64 RCPT TERM Ag 22 GAGE CRIMPED TO SAE WIRE SIZE NO.22 AND MATED TO MX123 0.64MM PIN:8.5 AMPS

WIRE	CURRENT RATING			
	23 deg.C	85 deg.C	105 deg.C	125 deg.C
18AWG	11.3A	11.3A	9.5A	6.6A
20AWG	10.0A	10.0A	8.3A	5.7A
22AWG	8.6A	8.6A	7.1A	5.0A

   B. 2.8MM RCPT TERM
      1. 2.8MM RCPT TERM TIN 14 GAGE CRIMPED TO SAE WIRE SIZE NO.14 AND MATED TO MX123 2.8MM BLADE: 25.6 AMPS

   C. 6.3MM RCPT TERM - FCI APEX
      1. 6.3MM RCPT TERM TIN/SILVER CRIMPED TO 6.0MM² WIRE AND MATED TO MOLEX 6.3MM² BLADE (Sn/Ag PLATED):36A AT 125°C

6. CONTACT MOLEX AUTOMOTIVE FOR AVAILABLE CUSTOM PATTERNS OF CAVITIES OPEN FOR CIRCUITS

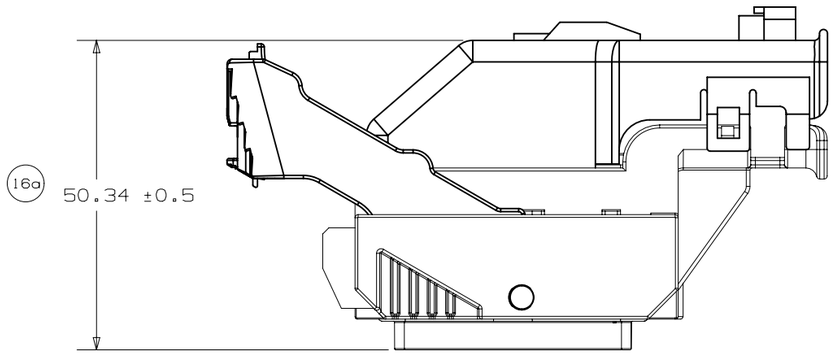

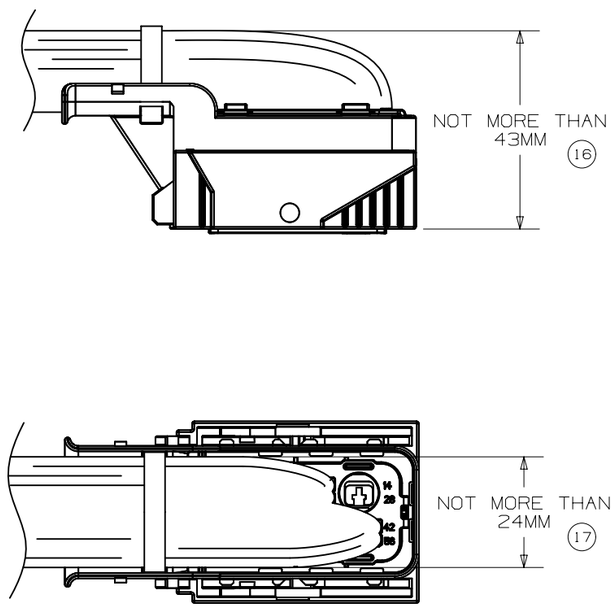

Fig. 1

	GM	PAGE TITLE WIRE DRESS PACKAGING DIMENSIONS		DRAWING NUMBER 12642694	DWG STATUS ST: R	REV: 001	PDI:	PAGE NUMBER 8 OF 22

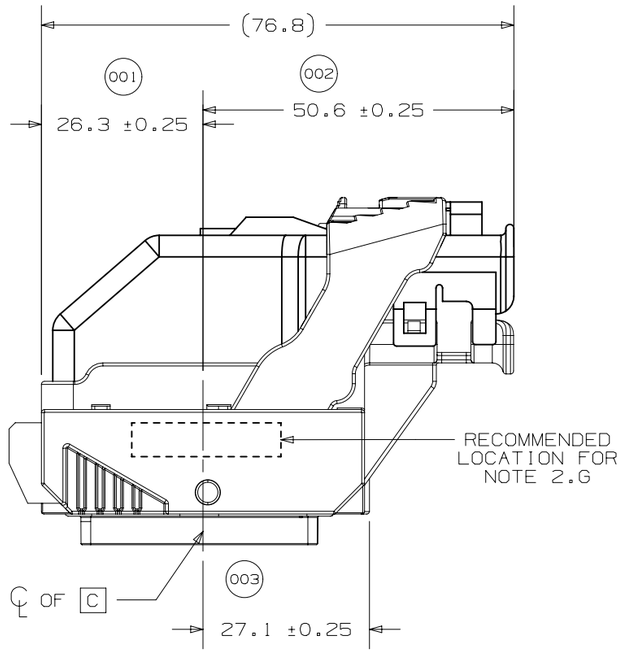

WIRE DRESS OPTION 0 SHOWN

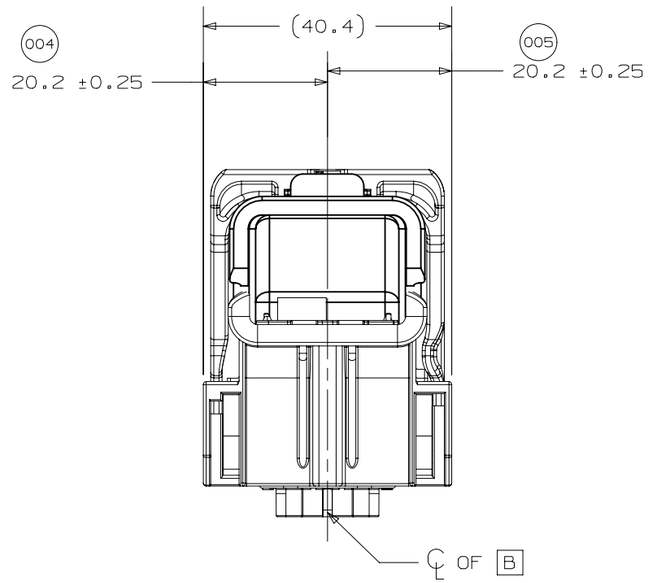

WIRE DRESS OPTION 0 SHOWN

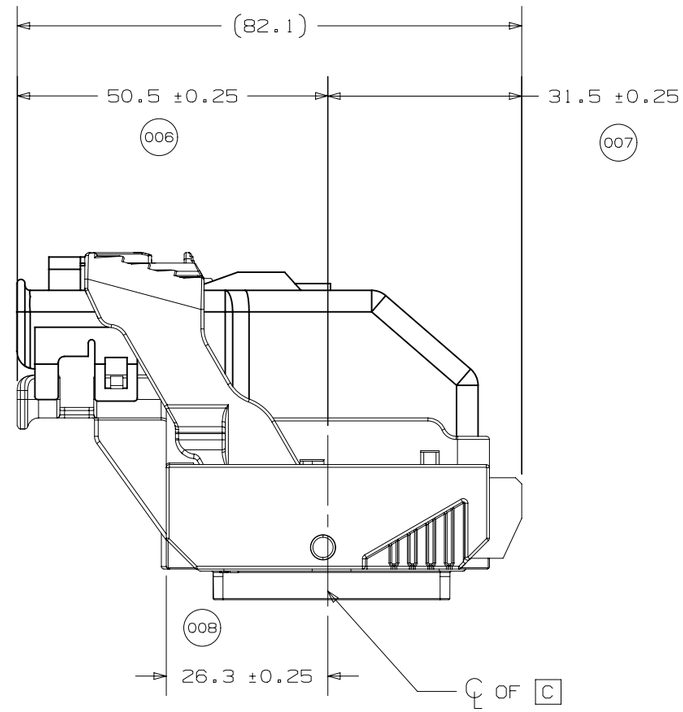

WIRE DRESS OPTION 9 SHOWN

GM	PAGE TITLE LOCATION AND PACKAGING DIMENSIONS REFERENCING INTERFACE DATUMS B & C		DRAWING NUMBER 12642694	DWG STATUS			PAGE NUMBER
				ST	REV	PDI	
				R	001		9 OF 22

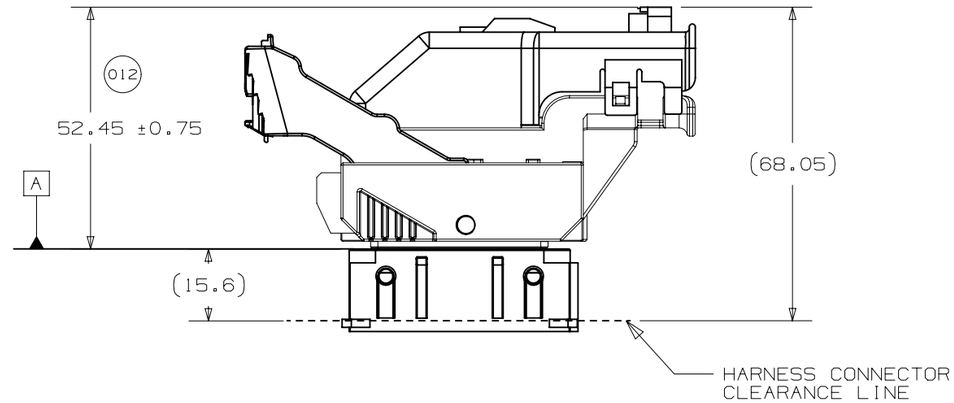

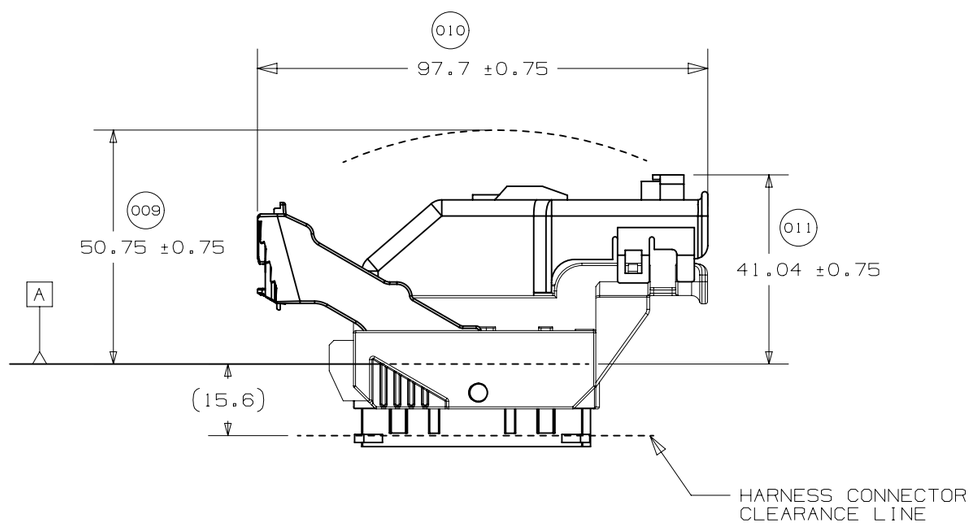

HARNESS CONNECTOR ASSEMBLY
IN PRE-LOCK POSITION

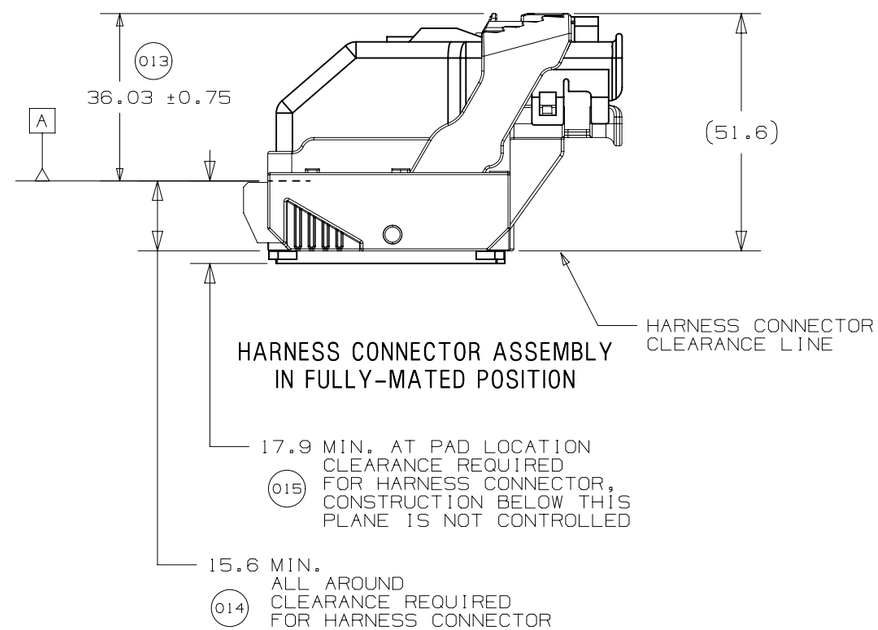

HARNESS CONNECTOR ASSEMBLY
IN FULLY-MATED POSITION

GM	PAGE TITLE LOCATION AND PACKAGING DIMENSIONS REFERENCING INTERFACE DATUM A		DRAWING NUMBER 12642694	DWG STATUS			PAGE NUMBER
				ST	REV	PDI	
				R	001		10 OF 22

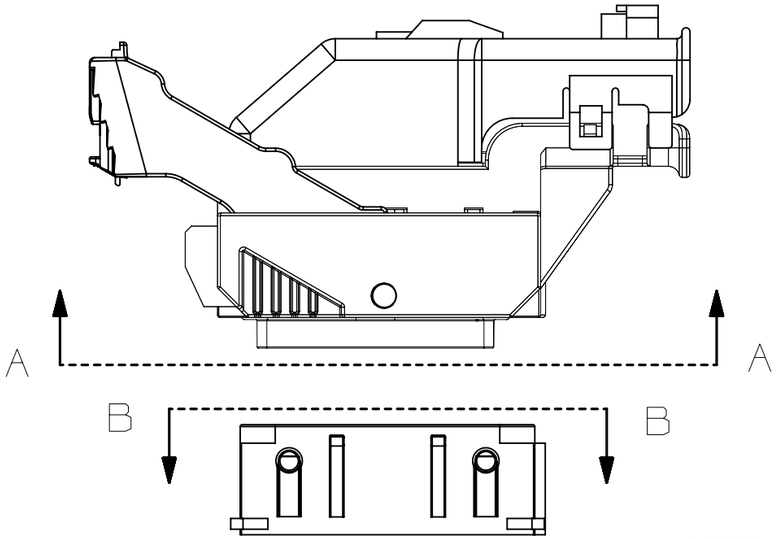

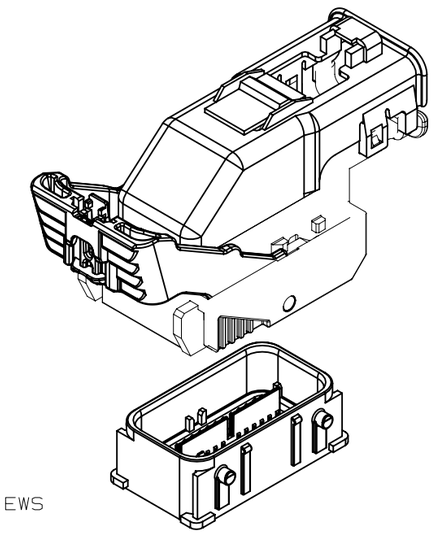

NOTE: REFERENCE THE COMPONENT TABLE
FOR KEY OPTIONS AND CONFIGURATIONS

INTERFACE SIDE SHOWN IN ALL SECTION VIEWS

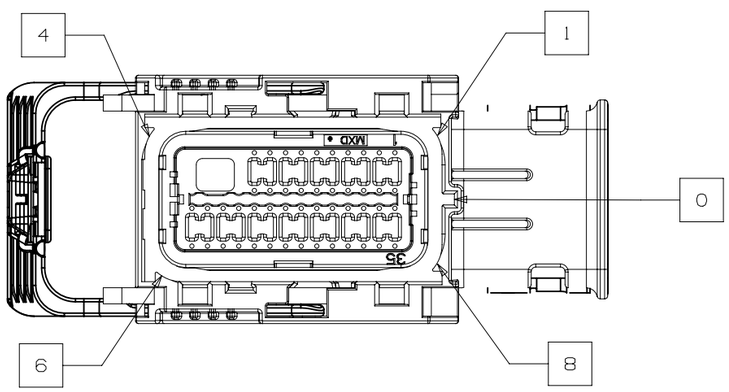

SECTION A-A
KEY OPTION B SHOWN

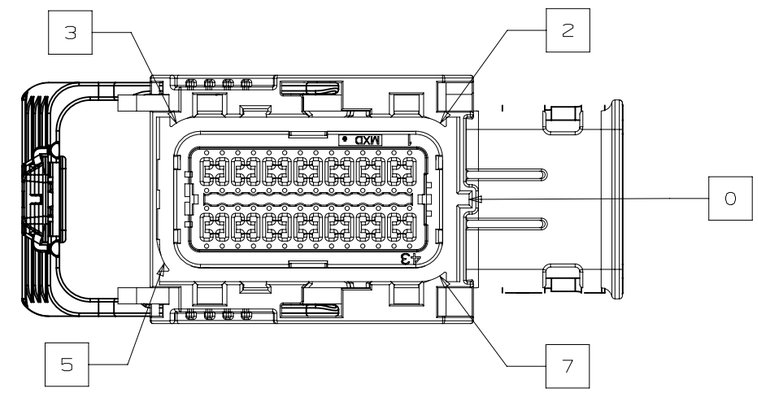

SECTION A-A
KEY OPTION K SHOWN

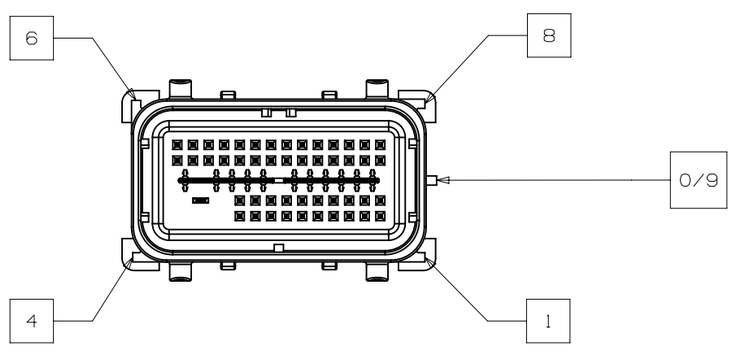

SECTION B-B
KEY OPTION B SHOWN

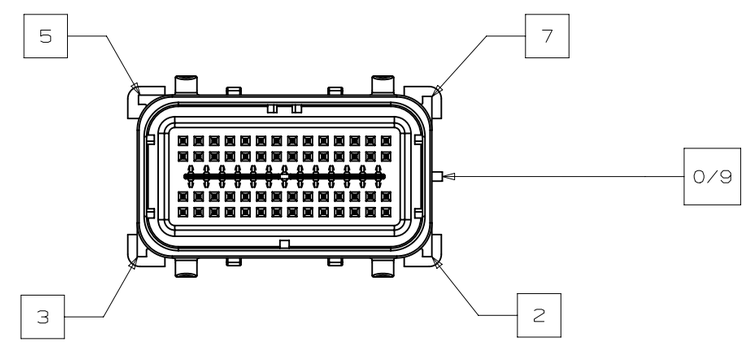

SECTION B-B
KEY OPTION K SHOWN

GM	PAGE TITLE KEY ID REF - WIRE DRESS OPTION 0		DRAWING NUMBER 12642694	DWG STATUS			PAGE NUMBER
				ST	REV	PDI	
				R	001		11 OF 22

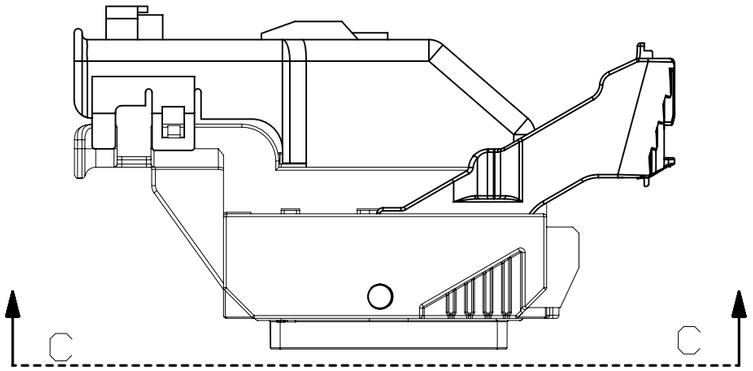

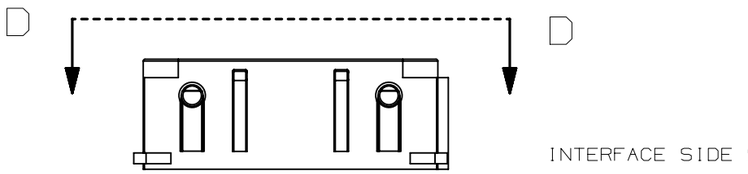

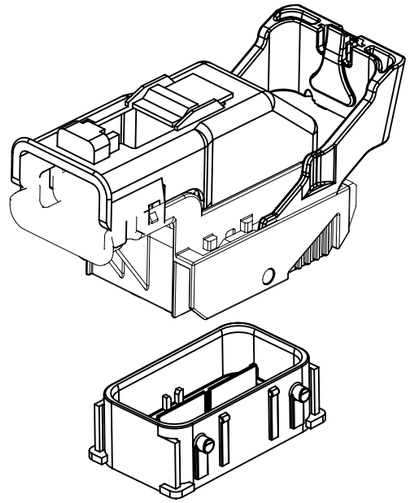

NOTE: REFERENCE THE COMPONENT TABLE
FOR KEY OPTIONS AND CONFIGURATIONS

INTERFACE SIDE SHOWN ON ALL SECTION VIEWS

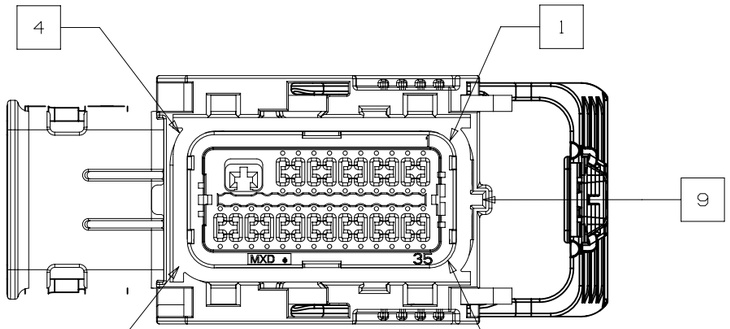

SECTION C-C
KEY OPTION B SHOWN

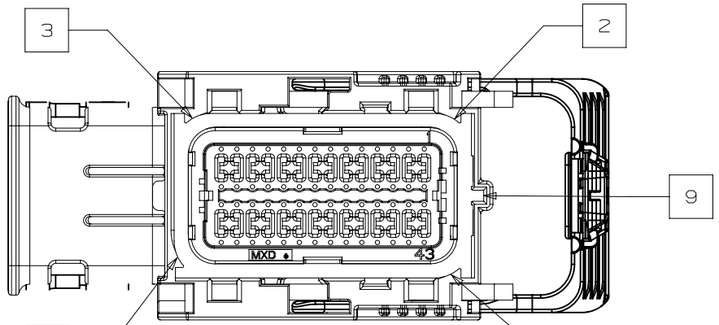

SECTION C-C
KEY OPTION K SHOWN

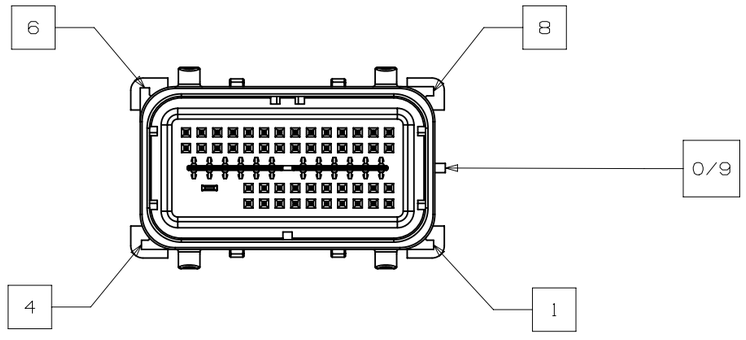

SECTION D-D
KEY OPTION B SHOWN

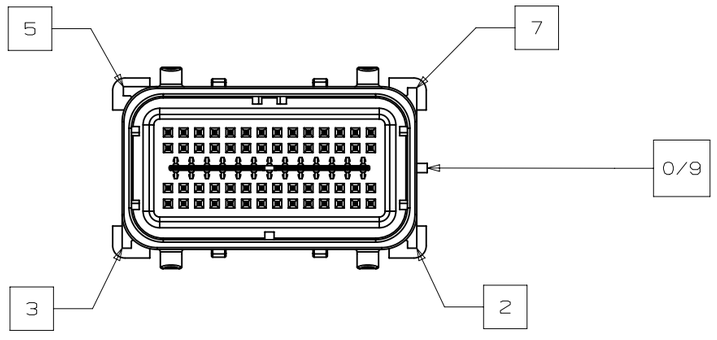

SECTION D-D
KEY OPTION K SHOWN

GM	PAGE TITLE KEY ID REF - WIRE DRESS OPTION 9		DRAWING NUMBER 12642694	DWG STATUS ST: R	REV: 001	PDI:	PAGE NUMBER 12 OF 22

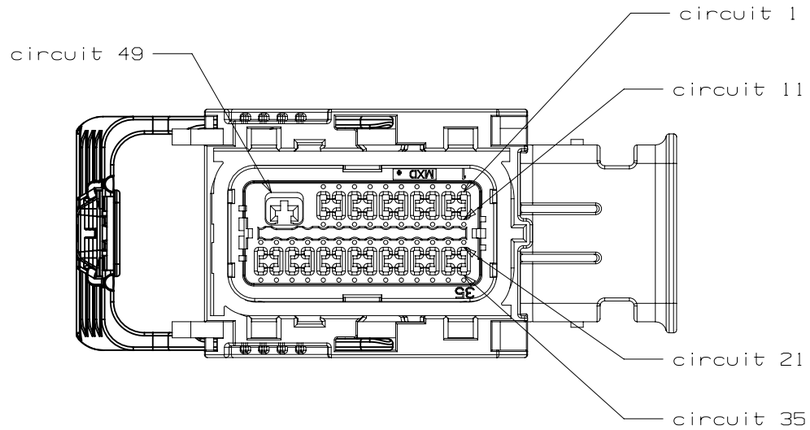

49 CKT HARNESS CONNECTOR ASSEMBLY
WIRE DRESS OPTION 0

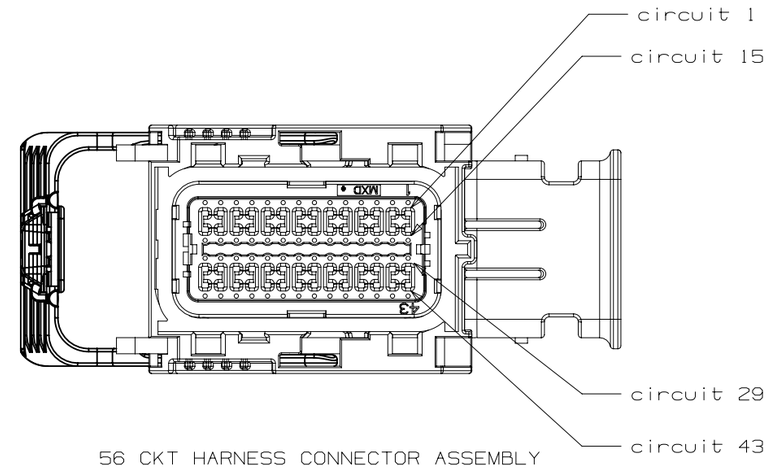

56 CKT HARNESS CONNECTOR ASSEMBLY
WIRE DRESS OPTION 0

INTERFACE SIDE SHOWN ON ALL VIEWS

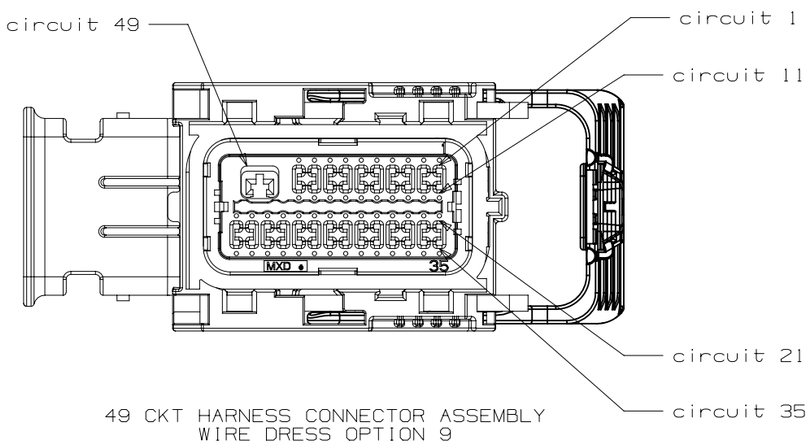

49 CKT HARNESS CONNECTOR ASSEMBLY
WIRE DRESS OPTION 9

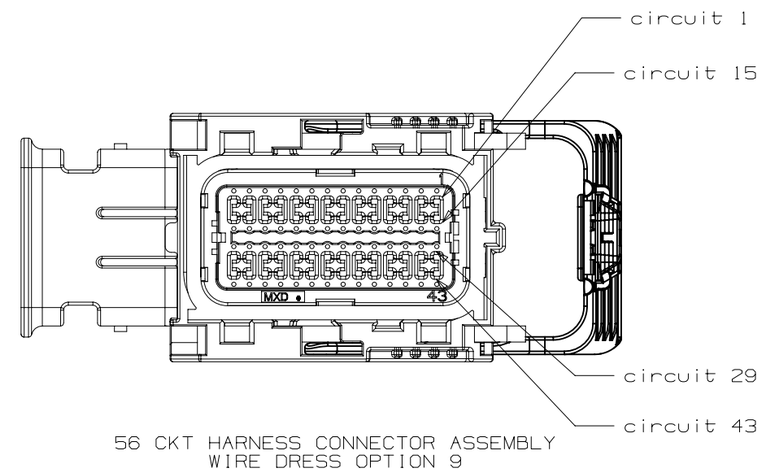

56 CKT HARNESS CONNECTOR ASSEMBLY
WIRE DRESS OPTION 9

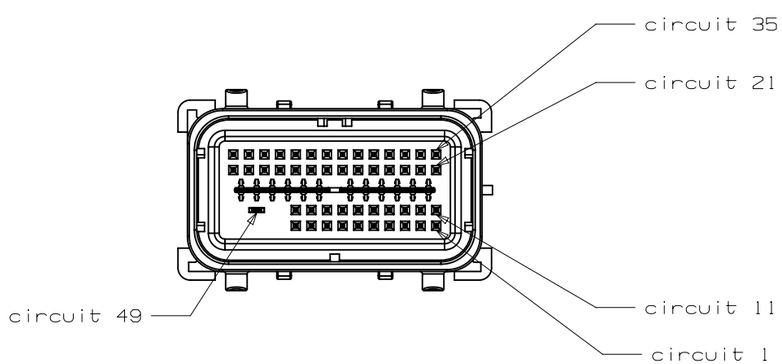

49 CKT COMPONENT CONNECTOR INTERFACE

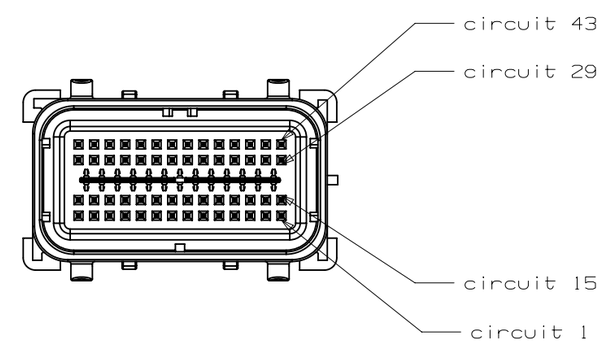

56 CKT COMPONENT CONNECTOR INTERFACE

	PAGE TITLE	DRAWING NUMBER	DWG STATUS			PAGE NUMBER
GM	CIRCUIT CONFIGURATIONS	12642694	ST	REV	PDI	13 OF 22
			R	001		

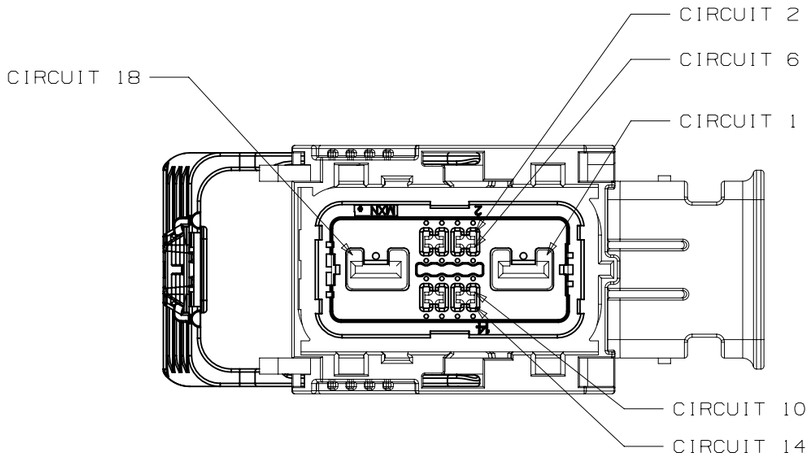

18 CKT HARNESS CONNECTOR ASSEMBLY
WIRE DRESS OPTION 0

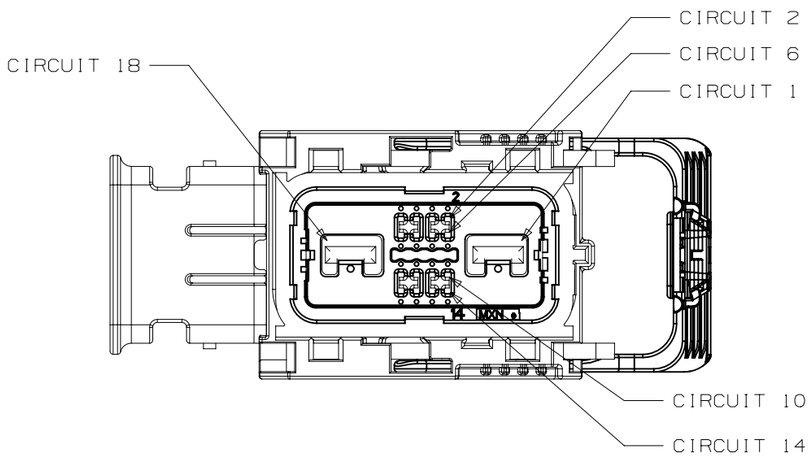

18 CKT HARNESS CONNECTOR ASSEMBLY
WIRE DRESS OPTION 9

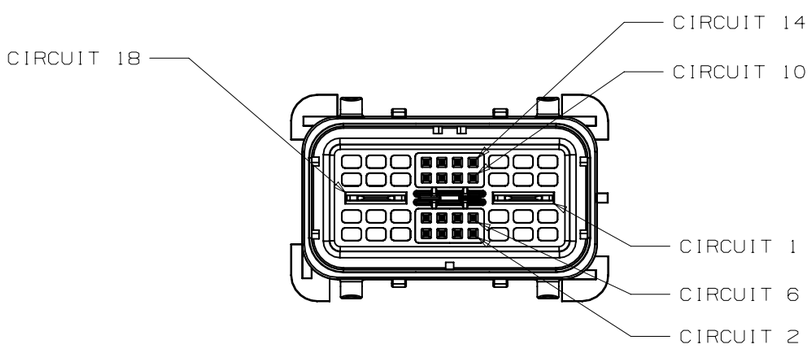

18 CKT COMPONENT CONNECTOR INTERFACE

INTERFACE SIDE SHOWN ON ALL VIEWS

	PAGE TITLE		DRAWING NUMBER	DWG STATUS			PAGE NUMBER
GM	CIRCUIT CONFIGURATIONS		12642694	ST	REV	PDI	14 OF 22
				R	001		

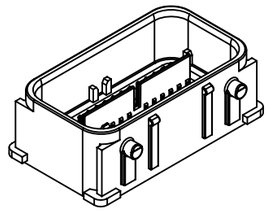

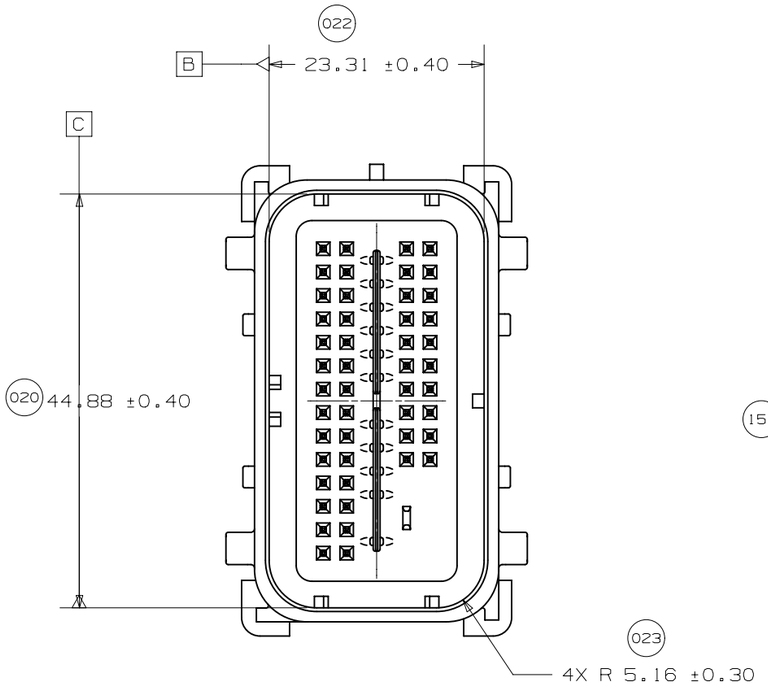

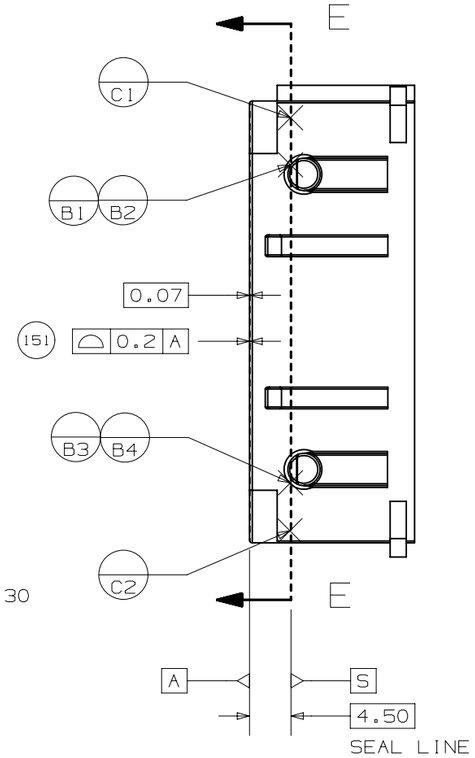

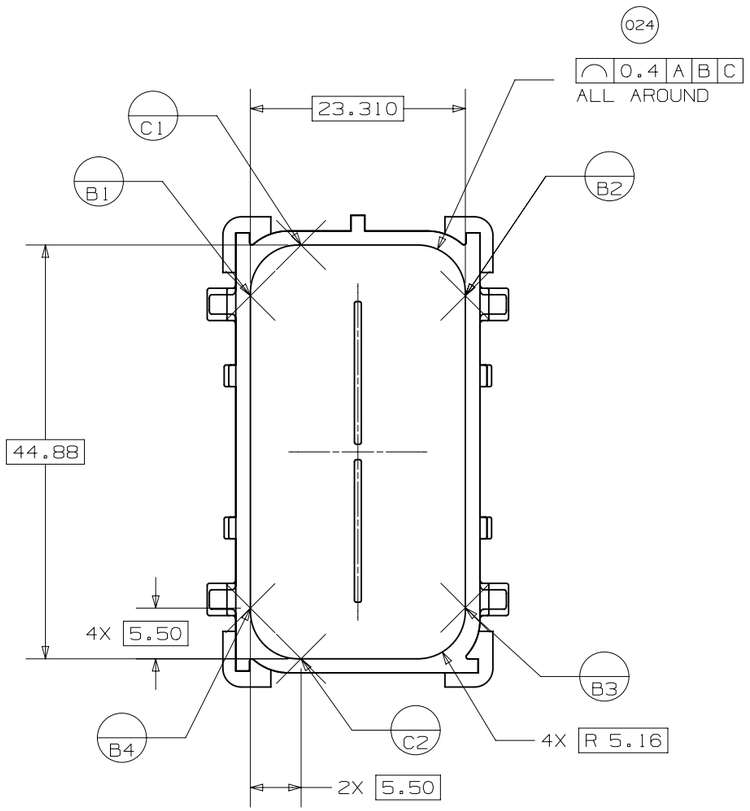

SECTION E-E
(AT SEAL LINE)

UNLESS SPECIFIED, TOLERANCE OF THE DEVICE INTERFACE TO BE 0.13 A B C

GM	PAGE TITLE COMPONENT CONNECTOR INTERFACE		DRAWING NUMBER 12642694	DWG STATUS			PAGE NUMBER
				ST	REV	PDI	
				R	001		15 OF 22

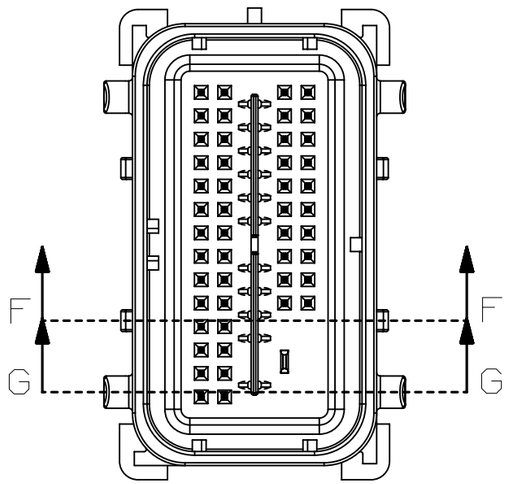

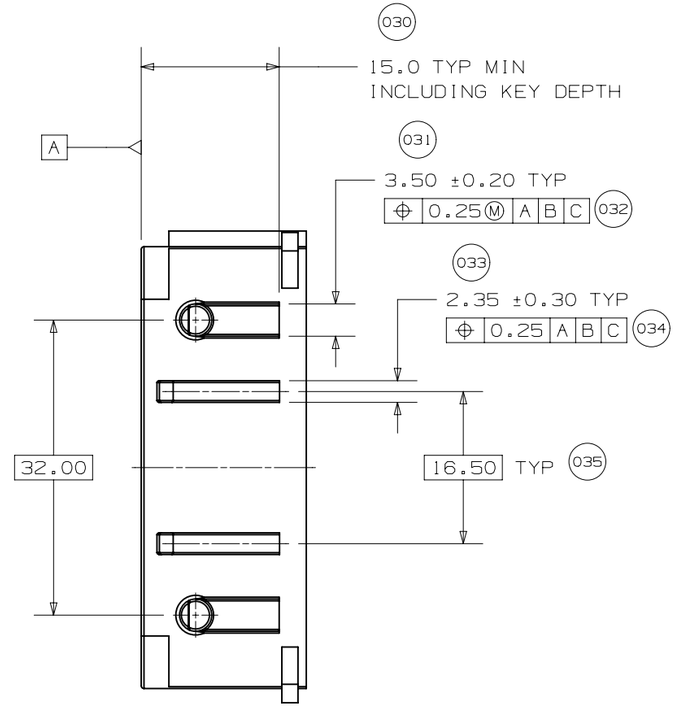

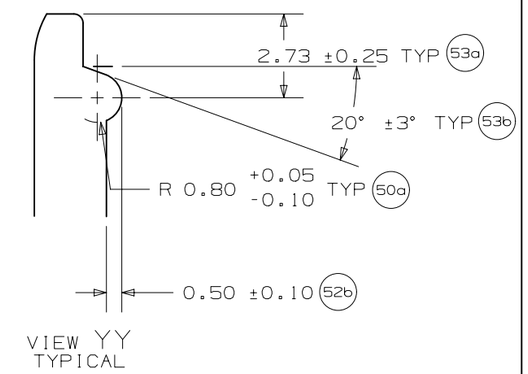

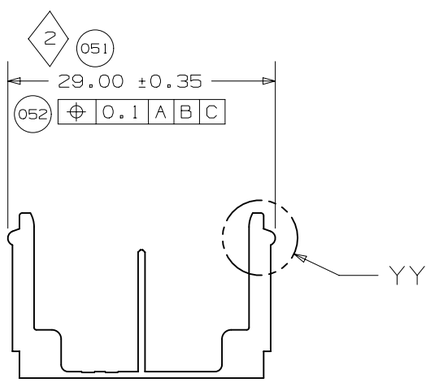

SECTION F-F
(RELEASE FEATURE)

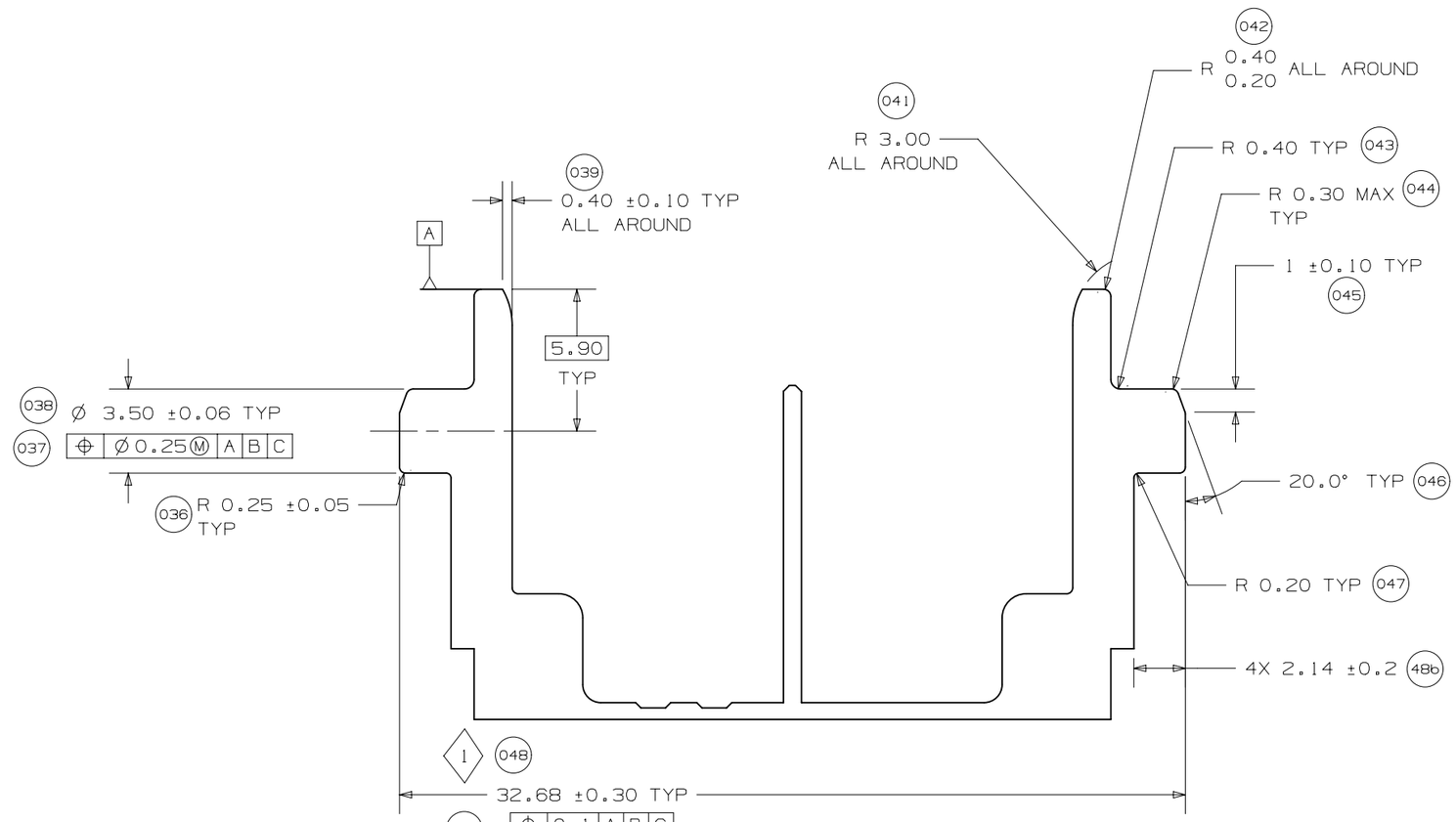

SECTION G-G
(CAM POST)

GM	PAGE TITLE COMPONENT CONNECTOR INTERFACE		DRAWING NUMBER 12642694	DWG STATUS ST: R REV: 001 PDI:		PAGE NUMBER 16 OF 22

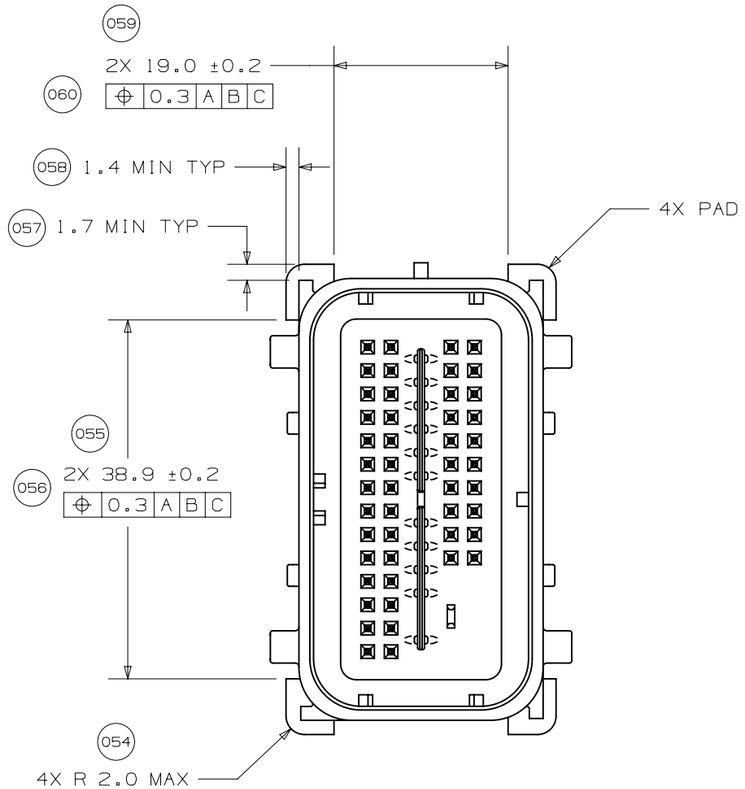

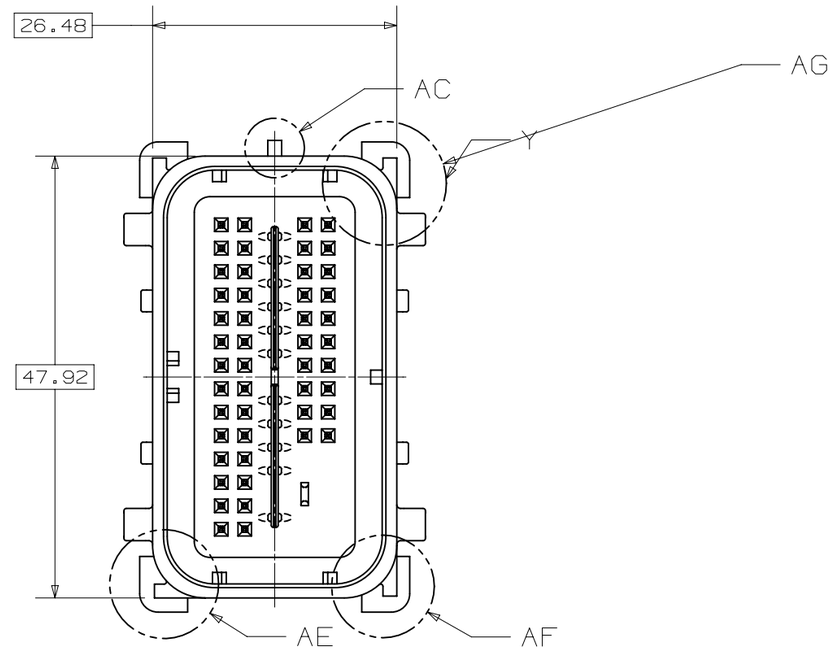

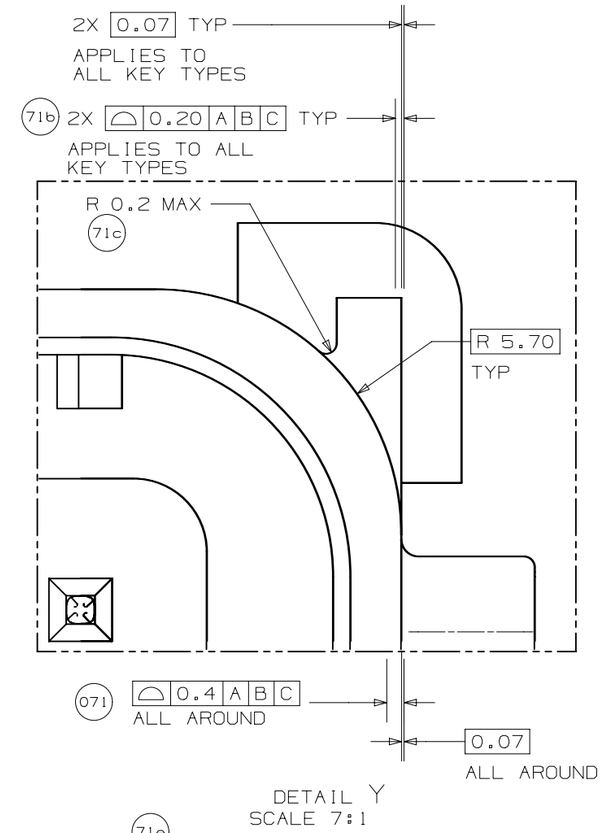

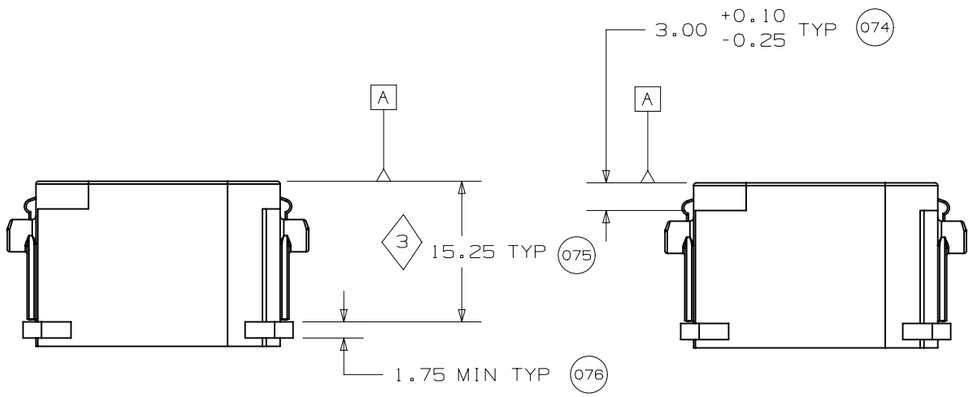

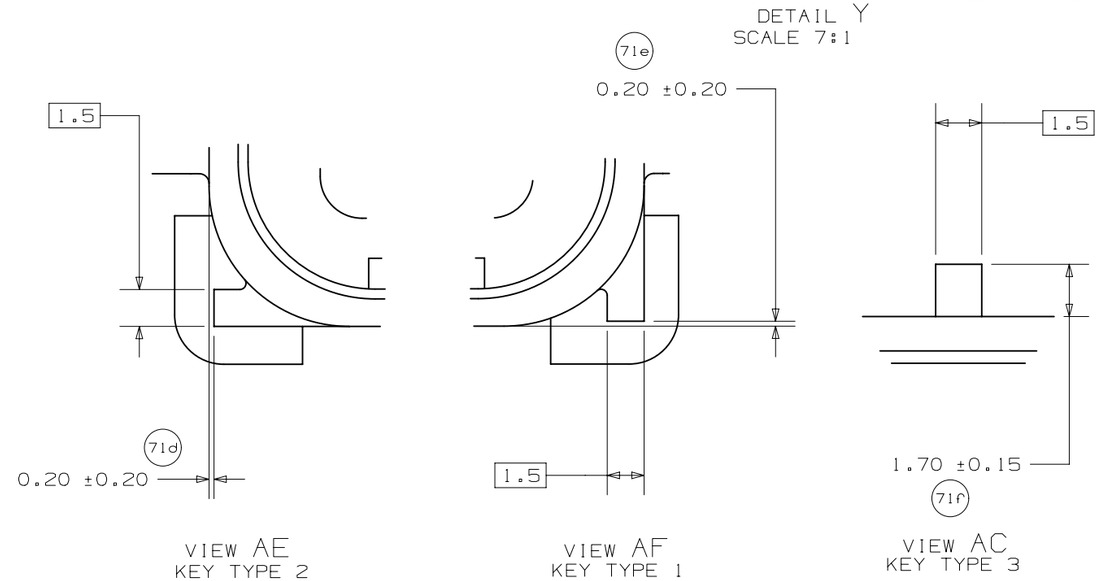

GM	PAGE TITLE COMPONENT CONNECTOR INTERFACE		DRAWING NUMBER 12642694	DWG STATUS ST: R REV: 001 PDI:	PAGE NUMBER 17 OF 22	

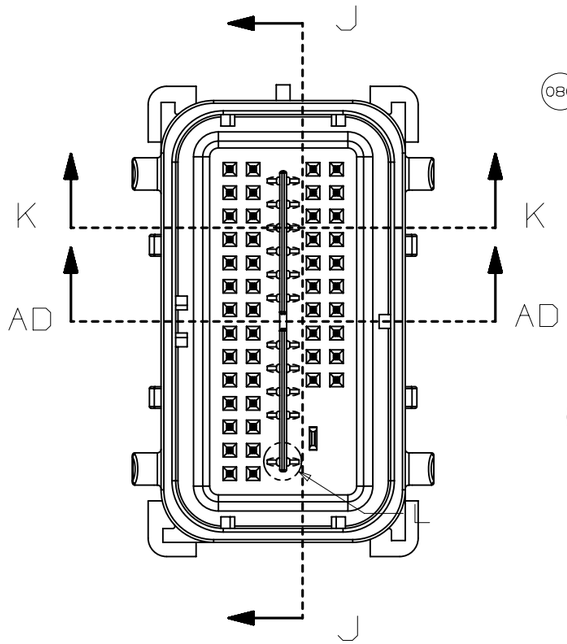

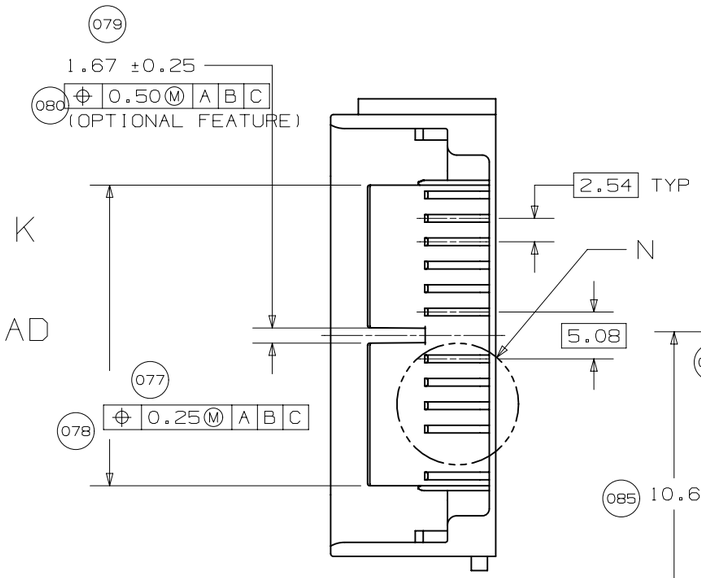

SECTION J-J

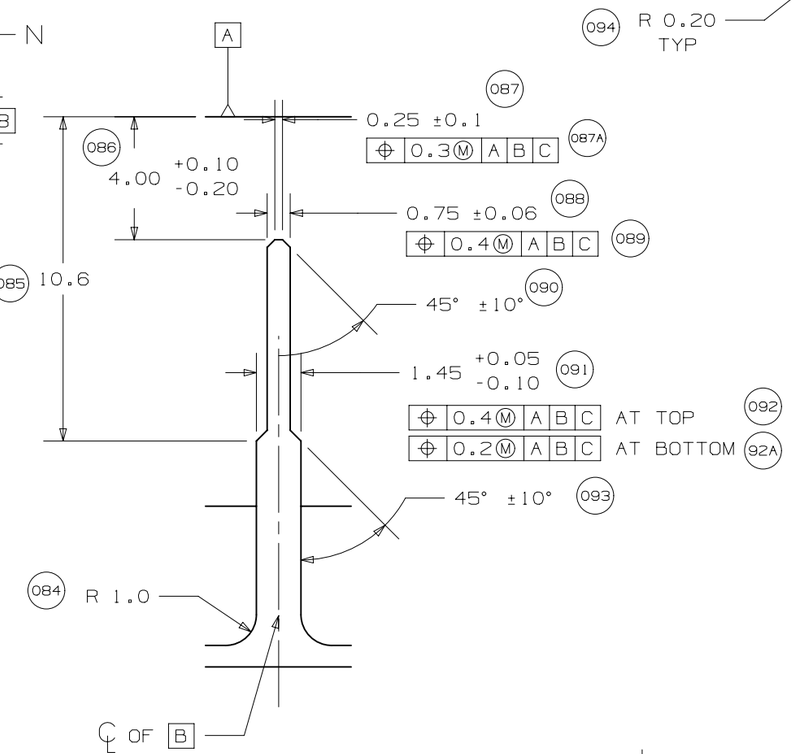

VIEW M
TYPICAL

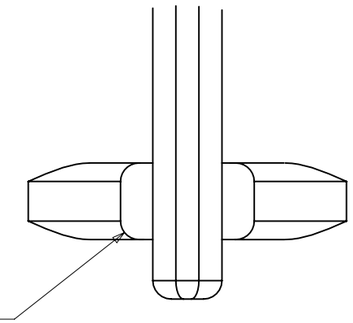

VIEW L

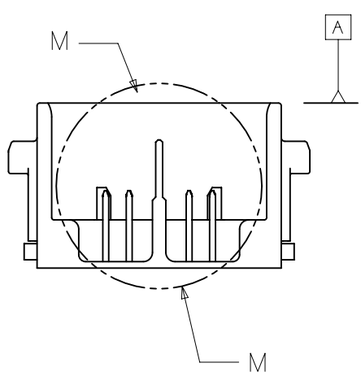

SECTION K-K

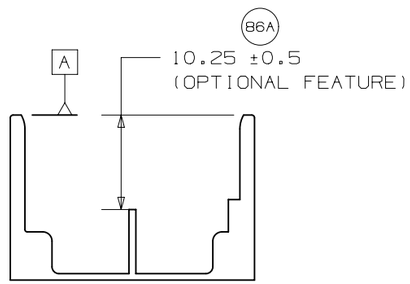

SECTION AD-AD

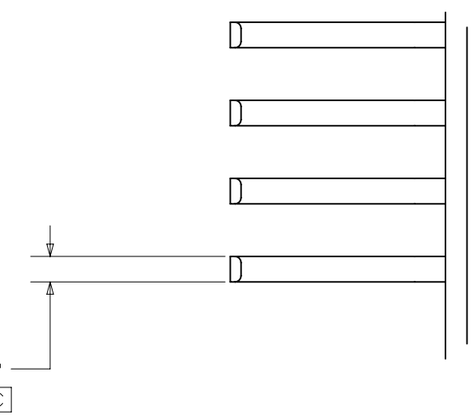

VIEW N

CKT	DIM 077
49 / 56 CKT	32.60 +0.10/-0.80
18 CKT	10.04 +0.10/-0.80

GM	PAGE TITLE COMPONENT CONNECTOR INTERFACE		DRAWING NUMBER 12642694	DWG STATUS ST: R	REV: 001	PDI:	PAGE NUMBER 18 OF 22

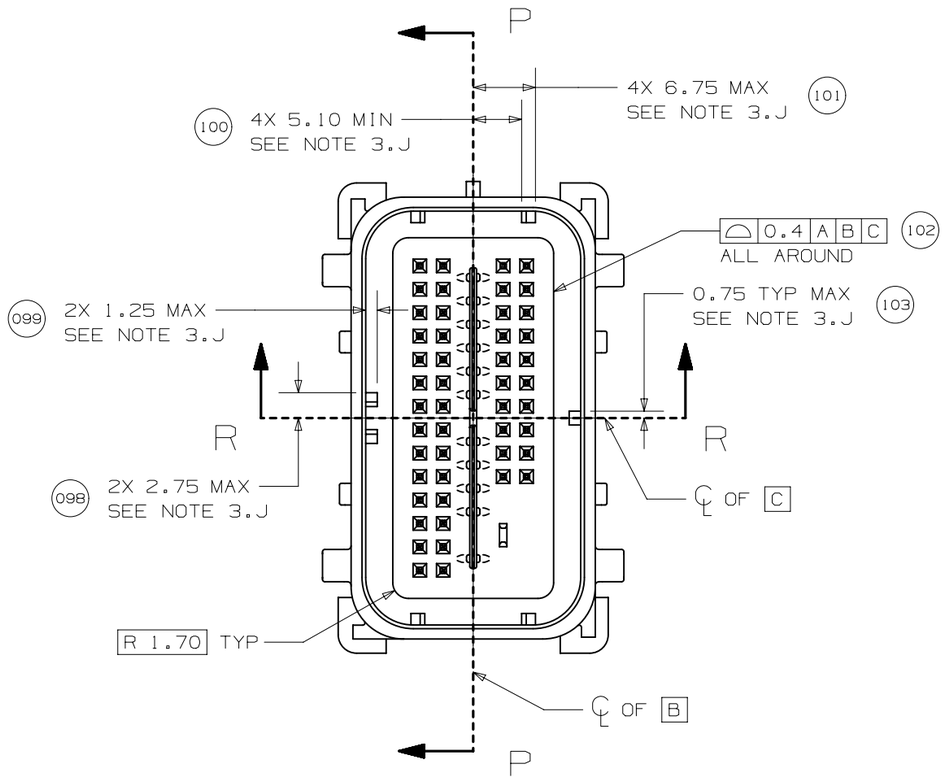

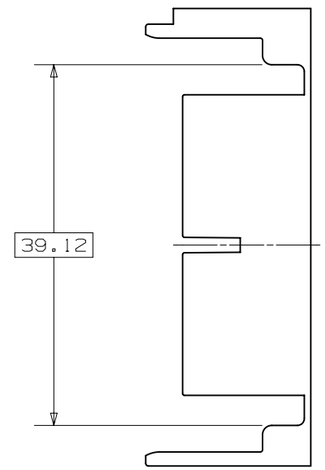

SECTION P-P

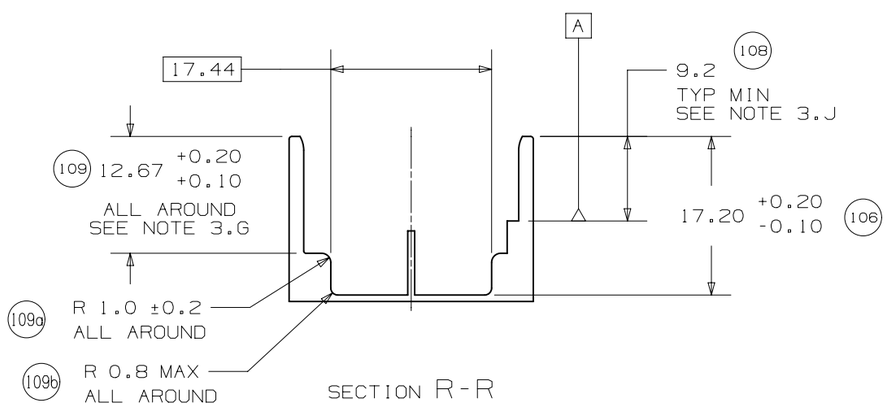

SECTION R-R

GM	PAGE TITLE COMPONENT CONNECTOR INTERFACE		DRAWING NUMBER 12642694	DWG STATUS ST: R	REV: 001	PDI:	PAGE NUMBER 19 OF 22

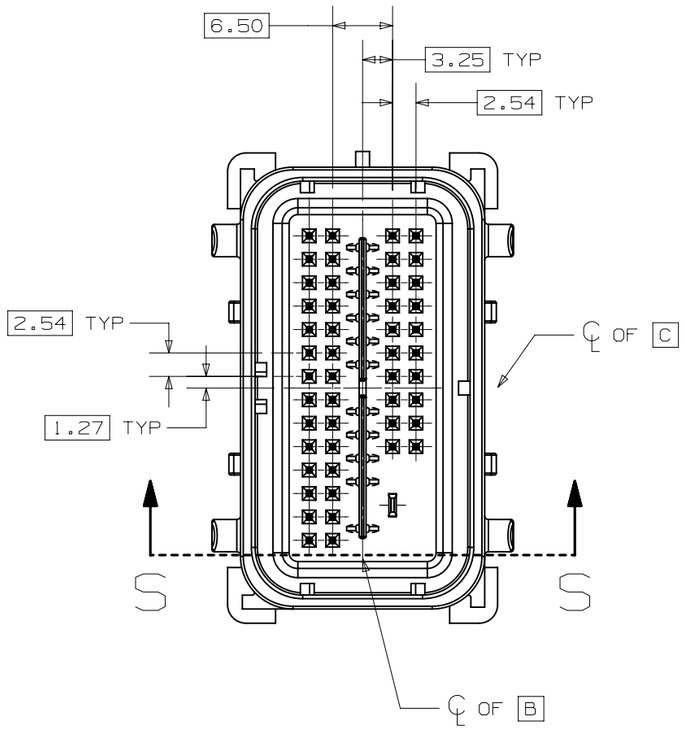

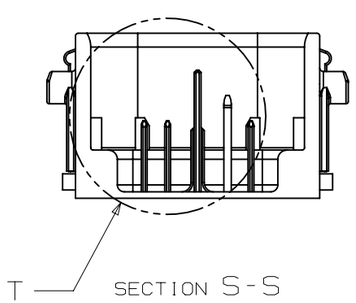

SECTION S-S

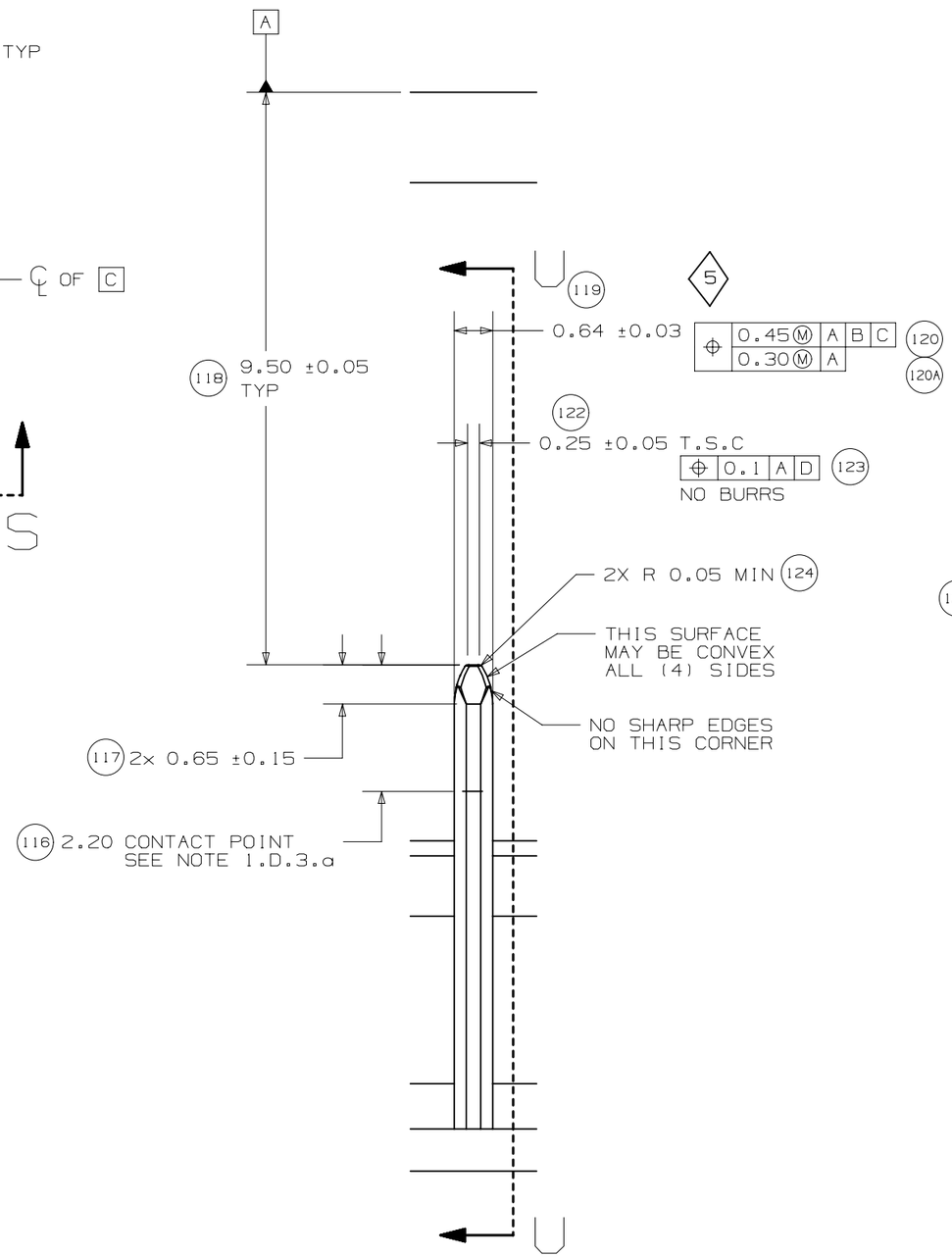

DETAIL T
TYPICAL

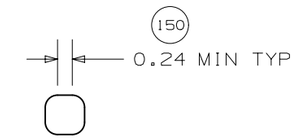

SECTION BB-BB

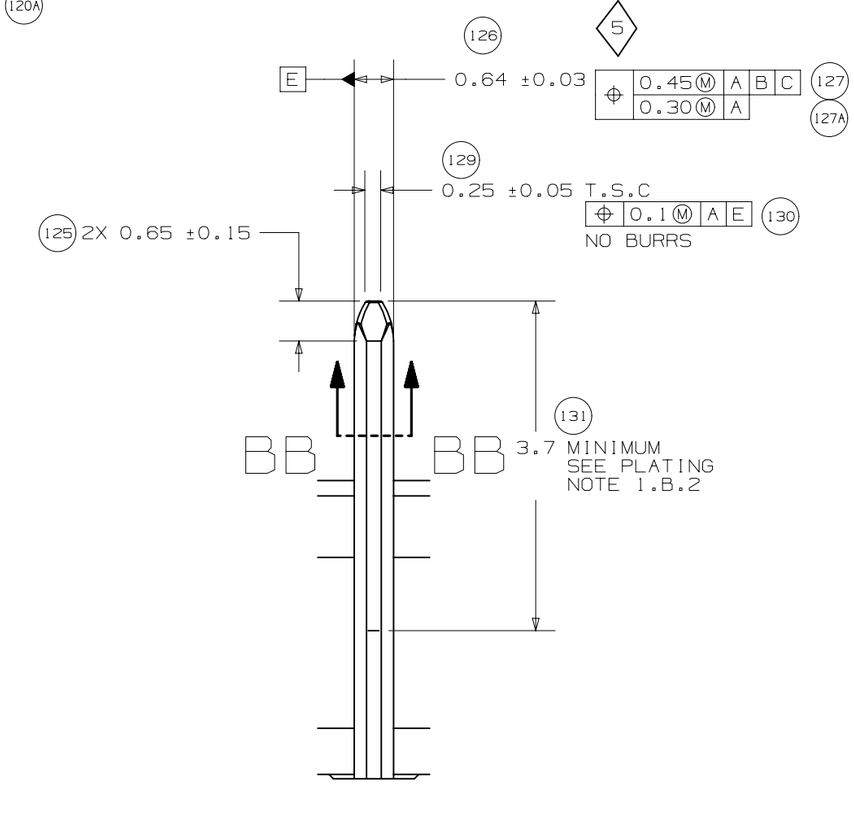

SECTION U-U
TYPICAL

GM	PAGE TITLE COMPONENT CONNECTOR INTERFACE		DRAWING NUMBER 12642694	DWG STATUS			PAGE NUMBER
				ST	REV	PDI	
				R	001		20 OF 22

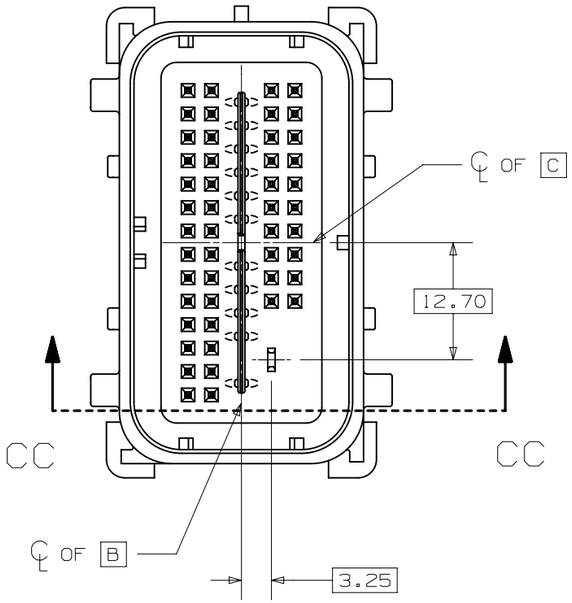

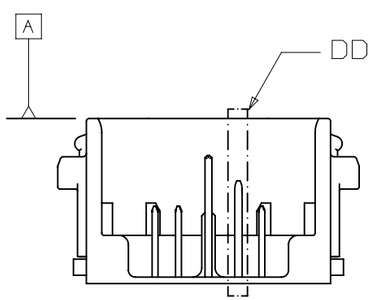

SECTION CC-CC

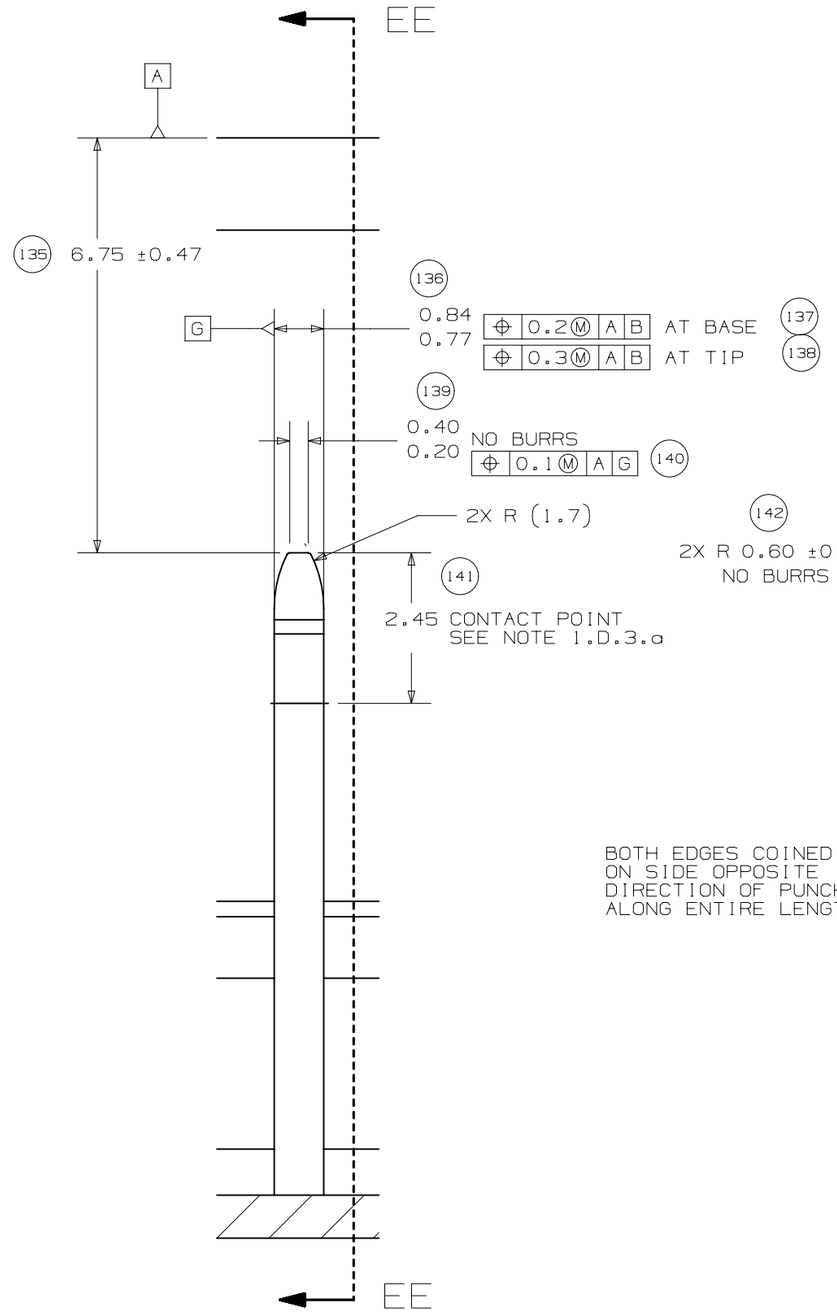

DETAIL DD
TYPICAL

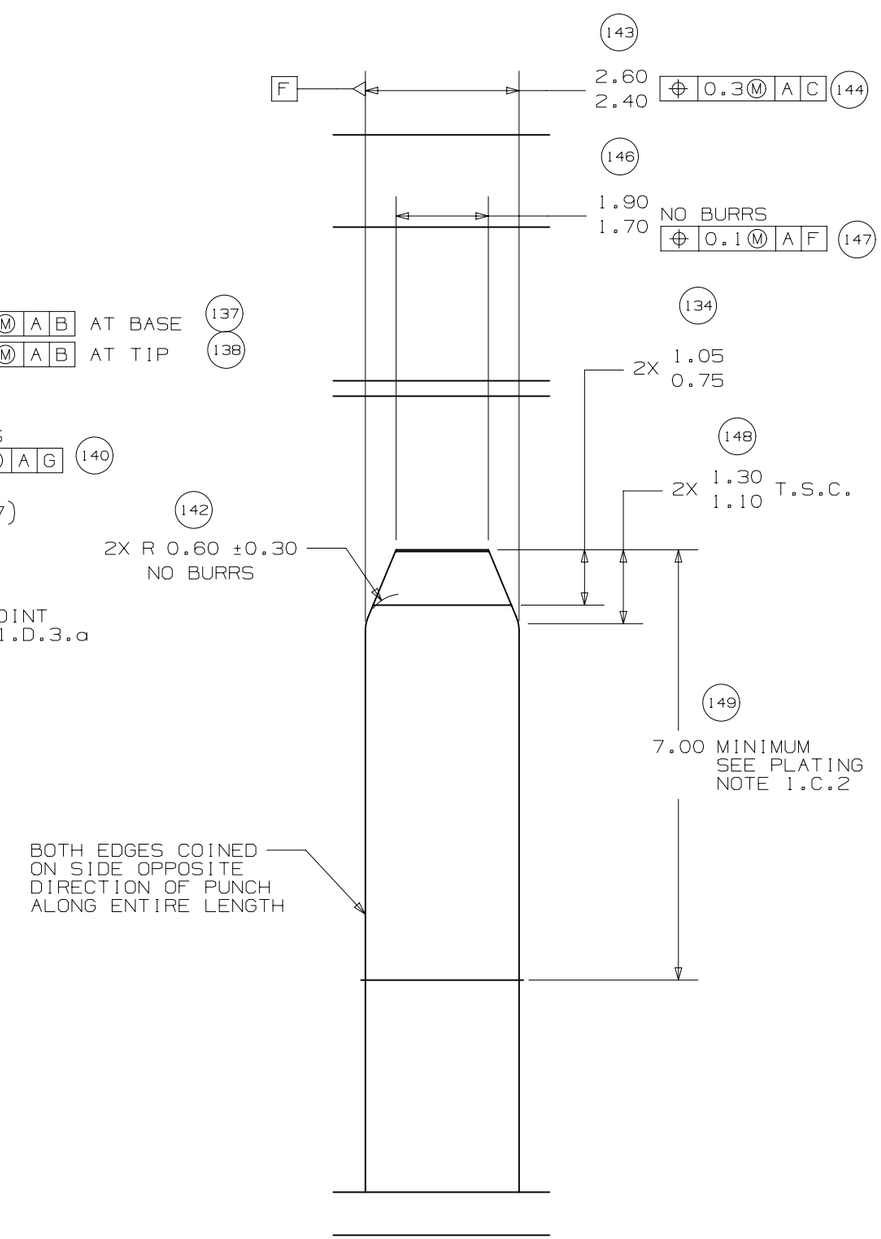

SECTION EE-EE
TYPICAL

GM	PAGE TITLE COMPONENT CONNECTOR INTERFACE		DRAWING NUMBER 12642694	DWG STATUS			PAGE NUMBER
				ST	REV	PDI	
				R	001		21 OF 22

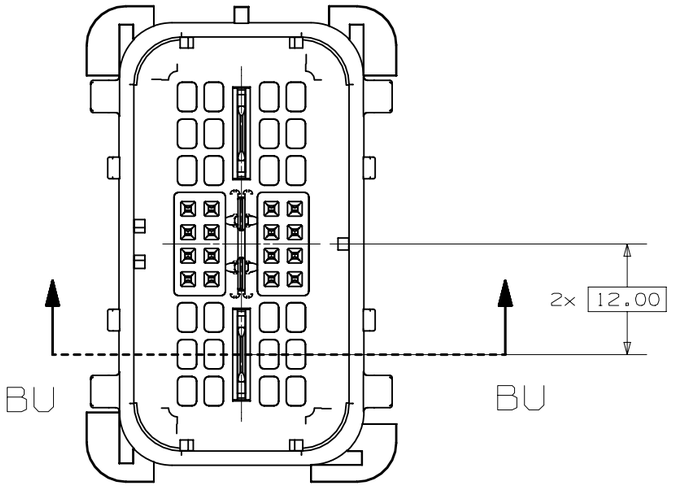

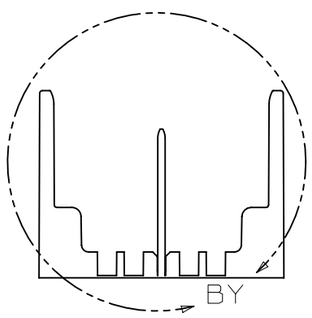

SECTION BU-BU

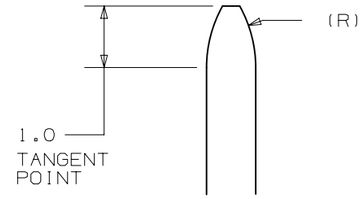

VIEW CA
SCALE 10:1

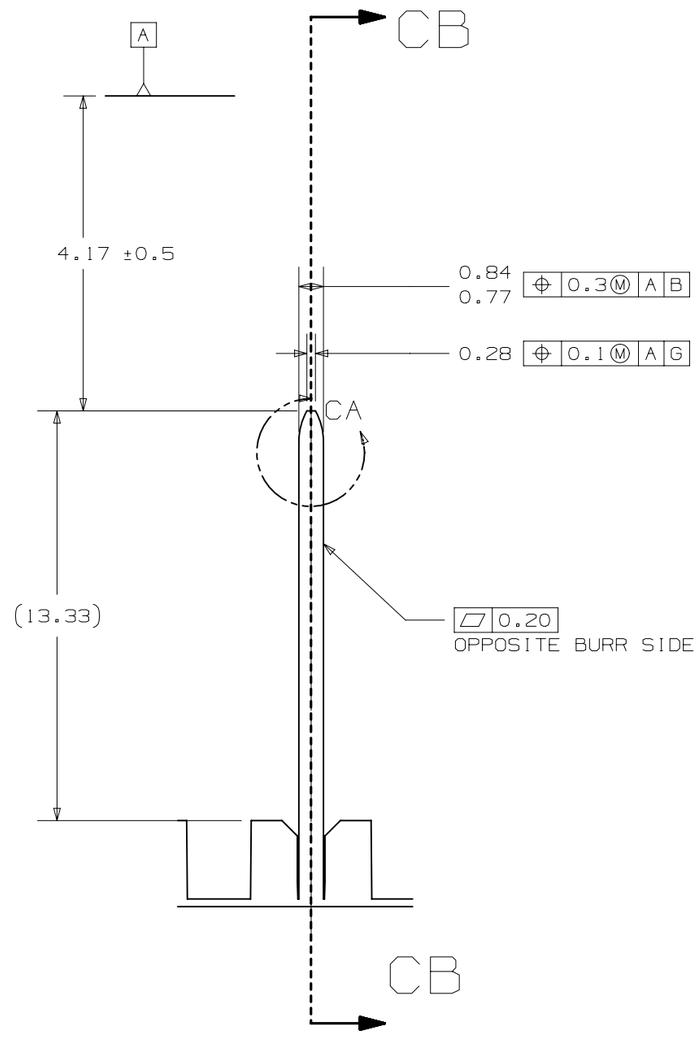

VIEW BY
SCALE 5:1

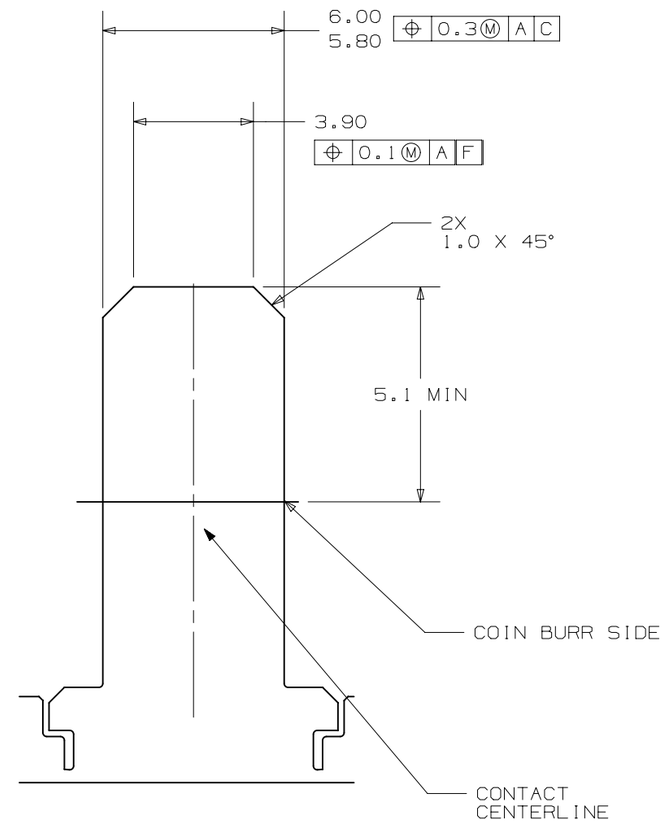

SECTION CB-CB

GM	PAGE TITLE COMPONENT CONNECTOR INTERFACE		DRAWING NUMBER 12642694	DWG STATUS			PAGE NUMBER
				ST	REV	PDI	
				R	001		22 OF 22

INDEX

PAGE TITLE	PAGE
TITLE BLOCK	1
REVISION BLOCK	2
PART BLOCK	3
KPC BLOCK	4
COMPONENT TABLE	5
NOTES	6
NOTES	7
WIRE DRESS PACKAGING DIMENSIONS	8
LOCATION AND PACKAGING DIMENSIONS REFERENCING INTERFACE DATUMS B & C	9
LOCATION AND PACKAGING DIMENSIONS REFERENCING INTERFACE DATUM A	10
KEY ID REF - WIRE DRESS OPTION 0	11
KEY ID REF - WIRE DRESS OPTION 9	12
CIRCUIT CONFIGURATIONS	13
CIRCUIT CONFIGURATIONS	14
COMPONENT CONNECTOR INTERFACE	15
COMPONENT CONNECTOR INTERFACE	16
COMPONENT CONNECTOR INTERFACE	17
COMPONENT CONNECTOR INTERFACE	18
COMPONENT CONNECTOR INTERFACE	19
COMPONENT CONNECTOR INTERFACE	20
COMPONENT CONNECTOR INTERFACE	21
COMPONENT CONNECTOR INTERFACE	22

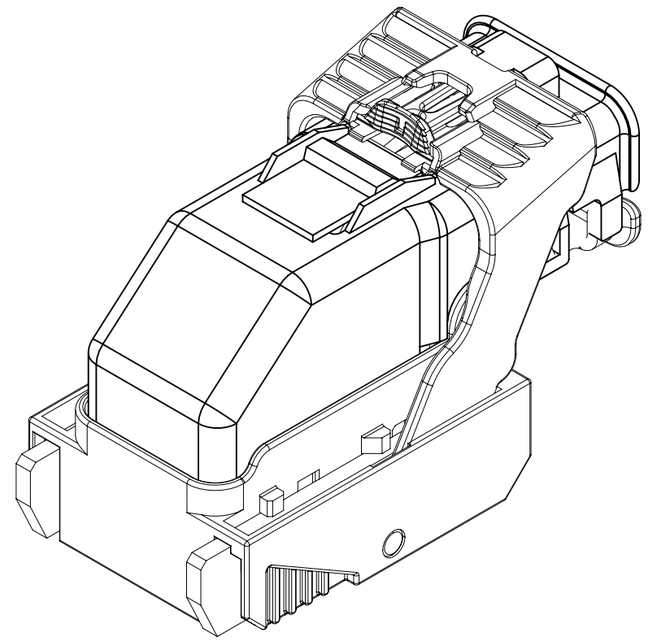

ISO VIEW

GM

THIS DOCUMENT IS IN ACCORDANCE WITH ASME Y14.5M-1994 AS AMENDED BY THE GM GLOBAL DIMENSIONING AND TOLERANCING ADDENDUM - 2004.

UG

CHANGE RESTRICTED
NO MANUAL CHANGES

DO NOT SCALE

METRIC

DIMENSIONS SHOWN IN MILLIMETERS UNLESS OTHERWISE SPECIFIED

REFERENCE
12H (MOLEX AUTOMOTIVE)

		DATE
DRAFTER	D. KOEHLER	28AP15
APVD1	M.R. OOSTERINK	29AP15
APVD2	J. SWARTZ	29AP15
APVD3	G. FLECK	08MY15
APVD4		
APVD5		

DRAWING NAME
HARNESS CONN ASM-SEALED
18/49/56 CKTS, MX123

DRAWING NUMBER
12642694

DWG STATUS		
ST	REV	PDI
R	001	

PAGE NUMBER
1 OF 22

PAGE	DWG STATUS					REVISION HISTORY	AUTH	DR	CK	ENG
	DATE	ST	REV	CHG	PDI					
	08MY15	R	001			RELEASED TO PRODUCTION AT DLS A	CRMRJD	DFK	MRO	GF

GM	PAGE TITLE REVISION BLOCK		DRAWING NUMBER 12642694	DWG STATUS ST: R REV: 001 PDI:		PAGE NUMBER 2 OF 22	

HIERARCHY /QUANTITY	DWG ITM	DWG RLTN SHIP	PART NUMBER	P-A ITM	DLS	ST	REV	PDI	NMCI	MASS (KG)	PART NAME	NOTES
	30	RD	12582679			C	006			0.009	WIRE HARNESS COVER	18/49/56 WAY
	29	RD	AVA77143			C	002			0.041	HARN CONN ASM 56 CKT	KEY M OPTION 9
	28	RD	AVA77193			C	002			0.041	HARN CONN ASM 56 CKT	KEY L OPTION 9
	27	RD	AVA77192			C	002			0.041	HARN CONN ASM 56 CKT	KEY K OPTION 9
	26	RD	12615659			C	004			0.041	HARN CONN ASM 56 CKT	KEY J OPTION 9
	25	RD	12603601			C	003			0.041	HARN CONN ASM 56 CKT	KEY H OPTION 9
	24	RD	12603600			C	004			0.041	HARN CONN ASM 56 CKT	KEY G OPTION 9
	23	RD	AVA77168			C	004			0.041	HARN CONN ASM 56 CKT	KEY M OPTION 0
	22	RD	AVA77167			C	004			0.041	HARN CONN ASM 56 CKT	KEY L OPTION 0
	21	RD	AVA77166			C	003			0.041	HARN CONN ASM 56 CKT	KEY K OPTION 0
	20	RD	12615658			C	004			0.041	HARN CONN ASM 56 CKT	KEY J OPTION 0
	19	RD	12582681			C	004			0.041	HARN CONN ASM 56 CKT	KEY H OPTION 0
	18	RD	12582680			2	008			0.041	HARN CONN ASM 56 CKT	KEY G OPTION 0
	17	RD	12615665			C	004			0.040	HARN CONN ASM 49 CKT	KEY F OPTION 9
	16	RD	12615664			C	004			0.040	HARN CONN ASM 49 CKT	KEY E OPTION 9
	15	RD	12615663			C	004			0.040	HARN CONN ASM 49 CKT	KEY D OPTION 9
	14	RD	12666121			C	003			0.040	HARN CONN ASM 49 CKT	KEY C OPTION 9
	13	RD	12650787			C	001			0.040	HARN CONN ASM 49 CKT	KEY B OPTION 9
	12	RD	12666119			C	003			0.040	HARN CONN ASM 49 CKT	KEY A OPTION 9
	11	RD	12615662			C	003			0.040	HARN CONN ASM 49 CKT	KEY F OPTION 0
	10	RD	12615661			C	003			0.040	HARN CONN ASM 49 CKT	KEY E OPTION 0
	09	RD	12615660			C	004			0.040	HARN CONN ASM 49 CKT	KEY D OPTION 0
	08	RD	12666120			C	003			0.040	HARN CONN ASM 49 CKT	KEY C OPTION 0
	07	RD	12650786			C	001			0.040	HARN CONN ASM 49 CKT	KEY B OPTION 0
	06	RD	12666118			C	002			0.040	HARN CONN ASM 49 CKT	KEY A OPTION 0
	05	RD	12644159			C	003			0.044	HARN CONN ASM 18 CKT	KEY H OPTION 9
	04	RD	12644157			C	003			0.044	HARN CONN ASM 18 CKT	KEY G OPTION 9
	03	RD	12644158			C	003			0.044	HARN CONN ASM 18 CKT	KEY H OPTION 0
	02	RD	12644156			C	003			0.044	HARN CONN ASM 18 CKT	KEY G OPTION 0
	01	RD	12642694		A	2	001			1.285	HARNESS CONN ASM-SEALED 18/49/56CKTS,MX123	
											DRAWING	

PARTS SHOWN ON DRAWING

	PAGE TITLE	DRAWING NUMBER	DWG STATUS			PAGE NUMBER
GM	PART BLOCK	12642694	ST	REV	PDI	3 OF 22
			R	001		

KEY PRODUCT CHARACTERISTICS
(IN ACCORDANCE WITH QN 1805 OR ON 1050)

▽ SAFETY/COMPLIANCE	TOTAL ON DRAWING	5
◇ FIT/FUNCTION	LAST NO. USED	5

NO	TYPE	DESCRIPTION	RATIONALE	PAGE/ZONE
1	F/F	32.68	IMPROVE CONNECTOR SYSTEM MATING	16
2	F/F	29.00	INSURE PROPER RELEASE OF LEVER	16
3	F/F	15.25	INSURE FINAL MATE POSITION	17
5	F/F	POSITIONAL TOLERANCE (2 PLACES)	INSURE CONNECTOR SYSTEM MATIBILITY	20

					APPLICABLE COMPONENTS					
Line	MFG.	MFG. P/N	GM P/N	Effective Date	DESCRIPTION	Key Option	Wire Dress Option	Key Config.	Color	Status
1	Molex	34575-0003	12582679	02JN03	WIRE HARNESS COVER	N/A	NA	N/A	BLACK	AVAILABLE
2	Molex	34576-0103	12666118	31JL15	HARN CONN ASM 49 CKT	A	0	1458	BLACK	ACTIVE
3	Molex	34576-0203	12650786	T.B.D.	HARN CONN ASM 49 CKT	B	0	1468	ST GRAY	NOT ACTIVE
4	Molex	34576-0303	12666120	31JL15	HARN CONN ASM 49 CKT	C	0	2467	BLUE	ACTIVE
5	Molex	34576-0403	12615660	T.B.D.	HARN CONN ASM 49 CKT	D	0	2367	BROWN	NOT ACTIVE
6	Molex	34576-0503	12615661	T.B.D.	HARN CONN ASM 49 CKT	E	0	2468	GREEN	NOT ACTIVE
7	Molex	34576-0603	12615662	T.B.D.	HARN CONN ASM 49 CKT	F	0	1357	NATURAL	NOT ACTIVE
8	Molex	34576-0703	12582680	11JN04	HARN CONN ASM 56 CKT	G	0	1358	BLUE	AVAILABLE
9	Molex	34576-0803	12582681	11JN04	HARN CONN ASM 56 CKT	H	0	2458	ST GRAY	AVAILABLE
10	Molex	34576-0903	12615658	T.B.D.	HARN CONN ASM 56 CKT	J	0	2457	BLACK	NOT ACTIVE
11	Molex	34576-1003	AVA77166	T.B.D.	HARN CONN ASM 56 CKT	K	0	2357	BROWN	NOT ACTIVE
12	Molex	34576-1103	AVA77167	T.B.D.	HARN CONN ASM 56 CKT	L	0	2368	GREEN	NOT ACTIVE
13	Molex	34576-1203	AVA77168	T.B.D.	HARN CONN ASM 56 CKT	M	0	2358	NATURAL	NOT ACTIVE
14	Molex	34576-1303	12666119	31JL15	HARN CONN ASM 49 CKT	A	9	1458	BLACK	ACTIVE
15	Molex	34576-1403	12650787	T.B.D.	HARN CONN ASM 49 CKT	B	9	1468	ST GRAY	NOT ACTIVE
16	Molex	34576-1503	12666121	31JL15	HARN CONN ASM 49 CKT	C	9	2467	BLUE	ACTIVE
17	Molex	34576-1603	12615663	T.B.D.	HARN CONN ASM 49 CKT	D	9	2367	BROWN	NOT ACTIVE
18	Molex	34576-1703	12615664	T.B.D.	HARN CONN ASM 49 CKT	E	9	2468	GREEN	NOT ACTIVE
19	Molex	34576-1803	12615665	T.B.D.	HARN CONN ASM 49 CKT	F	9	1357	NATURAL	NOT ACTIVE
20	Molex	34576-1903	12603600	11JN04	HARN CONN ASM 56 CKT	G	9	1358	BLUE	AVAILABLE
21	Molex	34576-2003	12603601	T.B.D.	HARN CONN ASM 56 CKT	H	9	2458	ST GRAY	NOT ACTIVE
22	Molex	34576-2103	12615659	T.B.D.	HARN CONN ASM 56 CKT	J	9	2457	BLACK	NOT ACTIVE
23	Molex	34576-2203	AVA77192	T.B.D.	HARN CONN ASM 56 CKT	K	9	2357	BROWN	NOT ACTIVE
24	Molex	34576-2303	AVA77193	T.B.D.	HARN CONN ASM 56 CKT	L	9	2368	GREEN	NOT ACTIVE
25	Molex	34576-2403	AVA77143	T.B.D.	HARN CONN ASM 56 CKT	M	9	2358	NATURAL	NOT ACTIVE
26	Molex	34851-0007	12644156	31AU15	HARN CONN ASM 18 CKT	G	0	1358	BLUE	ACTIVE
27	Molex	34851-0008	12644158	31AU15	HARN CONN ASM 18 CKT	H	0	2458	ST GRAY	ACTIVE
28	Molex	34851-0019	12644157	31AU15	HARN CONN ASM 18 CKT	G	9	1358	BLUE	ACTIVE
29	Molex	34851-0020	12644159	31AU15	HARN CONN ASM 18 CKT	H	9	2458	ST GRAY	ACTIVE
30	Molex	34736-2002	12642697	01AU10	MX64 RCPT TERM Ag 18/20 GAGE B (RIGHT PAYOFF)	N/A	N/A	N/A	N/A	AVAILABLE
31	Molex	34736-2001	12642696	01AU10	MX64 RCPT TERM Ag 22 GAGE B (RIGHT PAYOFF)	N/A	N/A	N/A	N/A	AVAILABLE
32	Molex	34586-0001	T.B.D.	11JN04	MX123 0.64MM GROMMET PLUG	N/A	N/A	N/A	NATURAL	AVAILABLE
33	Yazaki	7116-4150-02	12588066	02JN03	2.8mm YESC SEALED FEMALE TERMINAL TIN 20/22 GAGE (CABLE RANGE 0.30mm-0.60mm)	N/A	N/A	N/A	N/A	NOT ACTIVE
34	Yazaki	7116-4151-02	12588067	02JN03	2.8mm YESC SEALED FEMALE TERMINAL TIN 16/18 GAGE (CABLE RANGE 0.75mm-1.40mm)	N/A	N/A	N/A	N/A	NOT ACTIVE
35	Yazaki	7116-4152-02	12582685	02JN03	2.8mm YESC SEALED FEMALE TERMINAL TIN 14 GAGE (CABLE RANGE 1.50mm-2.50mm)	N/A	N/A	N/A	N/A	AVAILABLE
36	Yazaki	7158-3111-60	12588068	02JN03	2.8mm CABLE SEAL (wire O.D. range 1.20mm-1.90mm)	N/A	N/A	N/A	GREEN	NOT ACTIVE
37	Yazaki	7158-3112-70	12588069	02JN03	2.8mm CABLE SEAL (wire O.D. range 1.80mm-2.30mm)	N/A	N/A	N/A	YELLOW	NOT ACTIVE
38	Yazaki	7158-3113-40	12582686	02JN03	2.8mm CABLE SEAL (wire O.D. range 2.18mm-3.00mm)	N/A	N/A	N/A	WHITE	AVAILABLE
39	Yazaki	7158-3114-90	T.B.D.	02JN03	2.8mm YESC CAVITY PLUG	N/A	N/A	N/A	BLUE	AVAILABLE
40	FCI	33140138	12646399	10JA14	6.35mm APEX RCPT TERM Sn/Ag GRIP CODE-10 (6mm2) - Greased	N/A	N/A	N/A	N/A	AVAILABLE
41	FCI	33140135	12654556	10JA14	6.35mm APEX RCPT TERM Sn/Ag GRIP CODE-TBD (1mm2) - Greased	N/A	N/A	N/A	N/A	AVAILABLE
42	QSR	A-0549C	12646688	01SE14	6.35mm CABLE SEAL (FOR 6.0mm2 WIRE SIZE - 3.6 TO 4.2mm INSULATION OD)	N/A	N/A	N/A	WHITE	AVAILABLE
43	QSR	A-0549B	12654557	01SE14	6.35mm CABLE SEAL (FOR 0.75-1.25mm2 WIRE SIZE - 1.8 TO 2.3mm INSULATION OD)	N/A	N/A	N/A	BLUE	AVAILABLE
44	Molex	63811-4200	XX019825	02JN03	MX64 TERM HAND CRIMP TOOL	N/A	N/A	N/A	N/A	AVAILABLE
45	Molex	63813-1400	XX019826	02JN03	MX64 TERM SERVICE TOOL	N/A	N/A	N/A	N/A	AVAILABLE
46	Molex	63865-8000	XX019827	02JN03	MX64 CRIMP APPLICATOR with TOOL KIT 18/20 GAGE PAYOFF DIRECTION D (left payoff) (contact Molex for payoff detail)	N/A	N/A	N/A	N/A	AVAILABLE
47	Molex	63865-8070	XX019828	02JN03	MX64 APPLICATOR TOOL KIT 18/20 GAGE	N/A	N/A	N/A	N/A	AVAILABLE
48	Molex	63865-8100	XX019829	02JN03	MX64 CRIMP APPLICATOR with TOOL KIT 22 GAGE PAYOFF DIRECTION D (left payoff) (contact Molex for payoff detail)	N/A	N/A	N/A	N/A	AVAILABLE
49	Molex	63865-8170	XX019830	02JN03	MX64 APPLICATOR TOOL KIT 22 GAGE	N/A	N/A	N/A	N/A	AVAILABLE
50	SPX	J35616-64	T.B.D.	02JN03	0.64mm PROBE TOOL (for rcpt)	N/A	N/A	N/A	N/A	AVAILABLE
51	SPX	J35616-64A	T.B.D.	02JN03	0.64mm PROBE TOOL WITH EXT (for rcpt)	N/A	N/A	N/A	N/A	AVAILABLE
52	SPX	J35616-65	T.B.D.	02JN03	0.64mm PROBE TOOL WITH EXT (for pin)	N/A	N/A	N/A	N/A	AVAILABLE
53	SPX	J35616-4A	T.B.D.	02JN03	2.8mm PROBE TOOL (for rcpt)	N/A	N/A	N/A	N/A	AVAILABLE
54	YAZAKI	X39899-J374	12094430	02JN03	2.8mm TERM SERVICE TOOL	N/A	N/A	N/A	N/A	AVAILABLE
55	TQI	7000-1001	N/A	01FE15	18CKT PASS THROUGH ADAPTERS	N/A	N/A	N/A	BLACK	AVAILABLE
56	TQI	7000-1004	N/A	01FE15	49CKT PASS THROUGH ADAPTERS	N/A	N/A	N/A	BLACK	AVAILABLE
57	TQI	79917-0060	N/A	02JA08	56CKT PASS THROUGH ADAPTERS	N/A	N/A	N/A	BLACK	AVAILABLE
58	Molex	63813-1500	J-38125-217	01SE14	6.35mm APEX TERM SERVICE TOOL	N/A	N/A	N/A	N/A	AVAILABLE

* MX123 WIRE HARNESS COVER MATES TO ANY 18/49/56 CKT MX123 HARN CONN ASSY SHOWN ON THIS TABLE

NOTES: UNLESS OTHERWISE SPECIFIED

1. MATERIAL FOR INTERFACE:

A. RESIN:
   1. 30% G.F. PBT; 20% MAX. (BY WEIGHT) REGRIND.
   2. MATING CONNECTOR INTERFACE PART COLOR MUST BE SAME AS MATCHING KEYED HARNESS CONNECTOR ASSEMBLY.
   3. MUST BE VALIDATED FOR INDIVIDUAL DEVICE APPLICATION REQUIREMENTS.

B. 0.64MM PINS:
   1. BASE MATERIAL: COPPER ALLOY; CONDUCTIVITY >= 28% IACS AT 20°C; TENSILE STRENGTH >= 635 N/mm²;SURFACE ROUGHNESS R_a 6 MAX.
   2. PLATING FINISH: SILVER (Ag). PLATING TO BE 1.9-3.3 um ELECTRODEPOSITED SEMI-BRIGHT SILVER OVER 1.25-2.25 um DUCTILE SULPHAMATE NICKEL PER NOTE 1(D).
   3. ANTI-TARNISH: SYNTHETIC HYDROCARBON CONTACT SURFACE FINISH OR EQUIVALENT APPLIED WITHOUT VOID TO CONTACT AREA (MIN 3.7mm FROM PIN TIP).

C. 2.8MM BLADE:
   1. BASE MATERIAL: COPPER ALLOY; CONDUCTIVITY>= 28% IACS AT 20°C; TENSILE STRENGTH >= 350 N/mm²; SURFACE ROUGHNESS R_a 6 MAX.
   2. PLATING FINISH: TIN. PLATING TO BE 2.5-5.0 um ELECTRODEPOSITED TIN, MATTE FINISH OVER 1.25-2.5um DUCTILE SULPHAMATE NICKEL PER NOTE 1(D).

D. 6.3MM BLADE:
   1. BASE MATERIAL: COPPER ALLOY; CONDUCTIVITY>= 50% IACS AT 20°C;
   2. PLATING FINISH: SILVER (Ag) PLATING TO BE 1.9-3.3 um ELECTRODEPOSITED SEMI-BRIGHT SILVER, OVER 1.25-2.5um DUCTILE SULPHAMATE NICKEL PER NOTE 1(D) WITH ENVIRONMENTAL BARRIER
      OR
      TIN/SILVER (ELECTRO-DEPOSITED), UNDERPLATE 0.5-2.0 um NICKEL OR COPPER.
      TOP PLATING: 1.0-3.0 um (SILVER RANGE 3.75-X.XX NO ANTI-TARNISH COATING REQUIRED).

E. PLATING REQUIREMENTS:

   1. SILVER PLATING
      a. 99.5% PURE SEMI-BRIGHT WITH NO ORGANIC BRIGHTNERS OR CHROMATES.

   2. NICKEL PLATING
      a. ELECTRODEPOSITED DUCTILE SULFAMATE NICKEL WITH A NON-BRIGHTENED FINISH. NO ORGANIC OR BRIGHTENING AGENTS SHALL BE ALLOWED.
      b. SHALL ONLY BE USED AS AN UNDERLYING PLATING AND MAY NOT BE USED AS AN ELECTRICAL CONTACT SURFACE PLATING.
      c. SHALL BE NODULE FREE WHEN VIEWED AT 10X MAGNIFICATION IN MEASURED IN CONTACT SURFACE AREA PLUS 0.5MM PERIMETER AROUND THE CONTACT SURFACE AREA.
      d. ALL PLATINGS SHALL HAVE A 1.0% MAXIMUM BY WEIGHT IMPURITIES. IMPURITIES ARE DEFINED AS ALL ELEMENTS NOT THE PRIMARY PLATING OR HARDENING AGENT IF APPLICABLE, AS DETERMINED BY WET CHEMICAL ANALYSIS OR AUGER METHOD. NO SINGLE IMPURITY SHALL EXCEED 0.1% MAXIMUM BY WEIGHT.

   3. TESTING
      a. THICKNESS TO BE MEASURED IN CONTACT SURFACE AREA PLUS 0.5MM PERIMETER AROUND THE CONTACT SURFACE AREA AS DESIGNATED IN THE DRAWING. THICKNESS SHALL BE DETERMINED BY METHOD OF X-RAY (XRF).
      b. PLATING ADHESION SHALL BE TESTED BY A BEND TEST FOR ALL METALS. THE TEST SAMPLE SHALL BE BENT 90 DEGREES TO DETERMINE DEPOSIT ADHESION. TESTING SHALL BE COMPLETED IN ACCORDANCE WITH ASTM SPEC B571.

2. DESIGN - GENERAL:

A. THIS IS A 100% CAD GENERATED PART. THE CAD MATHEMATICAL DATA IS THE MASTER FOR THIS PART. WHERE DIMENSIONS ARE SPECIFIED ON THE DRAWING, THE DRAWING IS THE AUTHORITY FOR DIMENSIONAL VALUES. FOR DIMENSIONAL OR ANY INFORMATION NOT SHOWN ON THIS DRAWING, ANALYZE THE CAD MODEL.
B. DIMENSIONS OBTAINED FROM THE DIGITAL MODEL ARE BASIC:
   1. FOR RELATIONSHIPS BETWEEN FEATURES WHEN ESTABLISHED BY GEOMETRIC TOLERANCES.
   2. FOR THE FORM OF A FEATURE WHEN CONTROLLED BY A PROFILE TOLERANCE.
   3. FOR THE SIZE, FORM AND/OR RELATIONSHIP BETWEEN FIXED DATUM TARGETS.
C. DIMENSIONS OBTAINED FROM THE DIGITAL MODEL ARE ROUNDED TO TWO DECIMAL PLACES (PER IEEE/ASTM SI 10-2002)
D. VIEWS AND SECTIONS ON THIS DRAWING ARE IN ACCORDANCE WITH GM DCS SECTION C3.
E. THE DIGITAL MODEL MUST CORRESPOND TO THE RELEASE LEVEL SHOWN IN THE PART BLOCK ON THIS DOCUMENT.
F. TOLERANCES:
   1. LINEAR 0.X ± 0.30
              0.XX ± 0.10
              0.XXX ± 0.10
   2. ANGULAR X° ± 3°
   3. ⌓ | 1.0 | A | B | C
G. MINIMUM WALL THICKNESS REQUIRED: 1.3mm.
H. CORNERS SHOWN AS SHARP TO BE R 0.2 MAX.
J. LETTERING SHALL BE 0.15 MAX RAISED IN 0.20 MAX RECESS PAD. THIS INCLUDES MATERIAL CODE, RECYCLING CODE, CAVITY ID AND DATE CODE.
K-1. PARTS MUST BE FREE OF DISCOLORATION, SALT RESIDUE AND OTHER IMPERFECTIONS THAT AFFECT FIT OR FUNCTION.
K-2. SCRATCHES OR DENTS NOT TO EXCEED 0.013mm IN DEPTH.
L. FOLLOWING PRODUCTION CODES TO BE PERMANENTLY MARKED & HUMAN READABLE TO A LETTER HEIGHT OF 1.5 ±0.5MM X 0.3 MAX DEEP
   1. MATERIAL #: XXXXX-XXXX
   2. DATE CODE: JJJY (JULIAN DAY, LAST DIGIT OF YEAR)
   3. INSPECTION MACHINE CODE + SERIAL #: X_XXXXX

3. DESIGN - MANUFACTURING:

A. DRAFT TO BE WITHIN TOLERANCE.
B. ALLOWABLE FLASH MAX 0.2 HIGH X MAX 0.13 THICK.
C. ALLOWABLE PARTING LINE MISMATCH 0.2 MAX.
D. EJECTOR PINS MARK TO BE FLUSH TO 0.25 MAX DEPRESSED.
E. ALLOWABLE GATE VESTIGE FLUSH TO 0.25 MAX PROTRUSION.
F. NO EXTERNAL MOLD RELEASE AGENT ALLOWED DURING MANUFACTURING.
G. STEEL THAT FORMS THE INDICATED SURFACE MUST BE POLISHED WITH A DIAMOND FINISH (SPI A-2) OVER THE FULL PERIPHERY OF THE TOOL. SURFACE MUST HAVE NO MISMATCH.
H. ANY PROCESS LUBRICANT REMAINING ON THE TERMINAL MUST NOT VARNISH OR DEGRADE IT'S ELECTRICAL PERFORMANCE UP TO A MAXIMUM CLASS AMBIENT TEMPERATURE PER SAE USCAR-2 FOR 1008 HOURS. PROCESS LUBRICANTS SHOULD BE APPROVED BY THE RESPONSIBLE ENGINEER.
J. OPTIONAL FEATURES PROVIDED FOR AUTOMATION.
K. PART MUST BE FREE FROM BURRS AND SHARP EDGES, WHICH MIGHT BE DETRIMENTAL TO SATISFACTORY ASSEMBLY, SAFE HANDLING OR FUNCTION OF PART.
L. PARTS AS DELIVERED TO ASSEMBLY SHALL BE CLEAN AND FREE OF DEBRIS, RESIDUAL ABRASIVE MATERIAL AND CORROSION PRODUCTS ADVERESLY AFFECTING FUNCTION OR APPEARENCE.
M. RESTRICTED AND REPORTABLE SUBSTANCES FOR PARTS PER GMW3059.

NOTES: UNLESS OTHERWISE SPECIFIED

4. SYSTEM REQUIREMENTS:

   A. HARNESS CONNECTOR IS COMPATIBLE WITH THE FOLLOWING WIRE SIZE NO'S:
      SAE 14AWG, MEETING SAE J1128
      SAE 18AWG, MEETING SAE J1128, MAX O.D. OF 2.06 MM
      SAE 20AWG, MEETING SAE J1128
      SAE 22AWG, MEETING SAE J1128, MIN O.D. OF 1.47 MM
      ISO 6mm², FLR2X-A/T-125 PER GM 15626 (FEB 2008)

   B. CABLE TIE SPECIFICATIONS:
      1. CABLE TIE:
         TENSILE RATING: 220N / (50lbs) MIN
         TIE LENGTH: 186mm MIN
         TIE WIDTH: 4.75mm MAX
         MATERIAL: NYLON
      2. INSTALLATION:
         CABLE TIE TENSION: 190N MIN
      3. DRESSED WIRE BUNDLE PACKAGING: SEE FIG. 1

   C. WHEN MATED WITH COMPONENT CONNECTOR INTERFACE AND/OR DRESS COVER, HARNESS CONNECTOR SYSTEM CONFORMS TO THE FOLLOWING:
      1. SAE/USCAR-2, REV: 3 APRIL, 2001; CLASS 3
      2. FIELD CORRELATED LIFE TEST, SAE/USCAR-20, NOV. 2001
      3. GMW #3191 AUGUST 22, 2000 (DRAFT); TEMPERATURE CLASS 3 (145°C), SEALING CLASS 1 (HIGH PRESSURE SPRAY), VIBRATION CLASS 2 (ON BODY)
      4. TPA USER FORCES (FULLY POPULATED WITH TERMINALS)
         a. REMOVAL FROM LOCK TO PRE-SET: <=120N

   D. WIRE SPECIFICATIONS:
      1. WIRE SURFACE MUST BE FREE OF SCRATCHES, GROOVES OR DENTS WHERE FUNCTIONAL

5. TERMINAL CURRENT RATINGS:

   ALL TESTING DONE IN ACCORDANCE WITH USCAR-2 REV5 SECTION 5.3

   A. MX64 RCPT TERM
      1. MX64 RCPT TERM Ag 18/20 GAGE CRIMPED TO SAE WIRE SIZE NO.18 AND MATED TO MX123 0.64MM PIN: 11.3 AMPS
      2. MX64 RCPT TERM Ag 22 GAGE CRIMPED TO SAE WIRE SIZE NO.22 AND MATED TO MX123 0.64MM PIN:8.5 AMPS

WIRE	CURRENT RATING			
	23 deg.C	85 deg.C	105 deg.C	125 deg.C
18AWG	11.3A	11.3A	9.5A	6.6A
20AWG	10.0A	10.0A	8.3A	5.7A
22AWG	8.6A	8.6A	7.1A	5.0A

   B. 2.8MM RCPT TERM
      1. 2.8MM RCPT TERM TIN 14 GAGE CRIMPED TO SAE WIRE SIZE NO.14 AND MATED TO MX123 2.8MM BLADE: 25.6 AMPS

   C. 6.3MM RCPT TERM - FCI APEX
      1. 6.3MM RCPT TERM TIN/SILVER CRIMPED TO 6.0MM² WIRE AND MATED TO MOLEX 6.3MM² BLADE (Sn/Ag PLATED):36A AT 125°C

6. CONTACT MOLEX AUTOMOTIVE FOR AVAILABLE CUSTOM PATTERNS OF CAVITIES OPEN FOR CIRCUITS

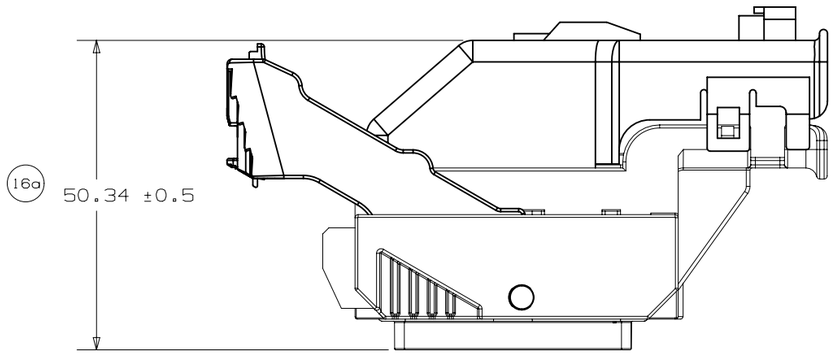

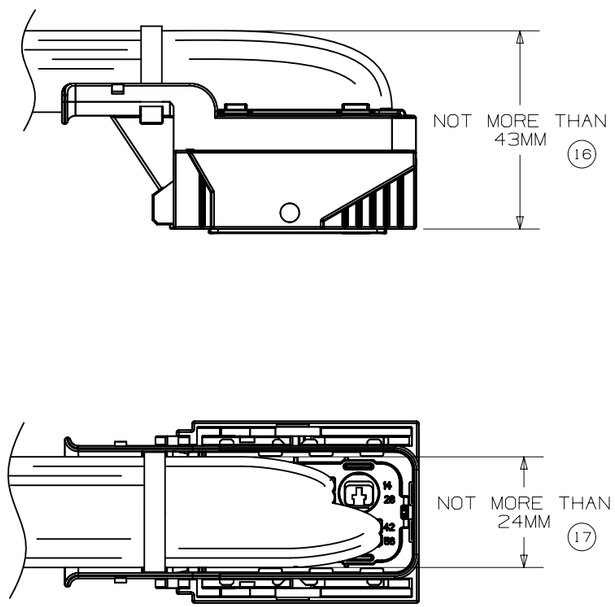

Fig. 1

	GM	PAGE TITLE WIRE DRESS PACKAGING DIMENSIONS		DRAWING NUMBER 12642694	DWG STATUS ST: R	REV: 001	PDI:	PAGE NUMBER 8 OF 22

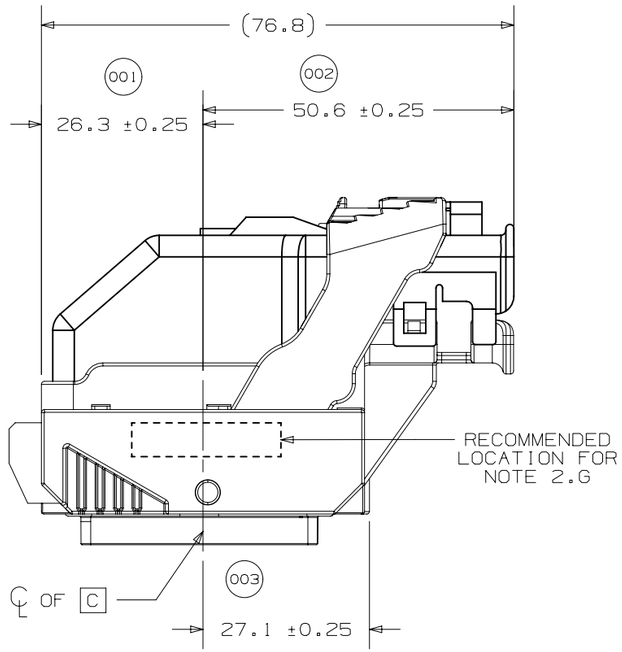

WIRE DRESS OPTION 0 SHOWN

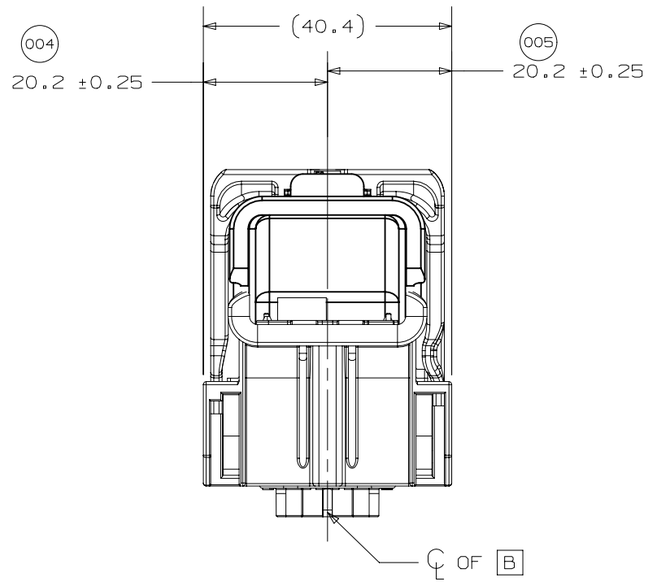

WIRE DRESS OPTION 0 SHOWN

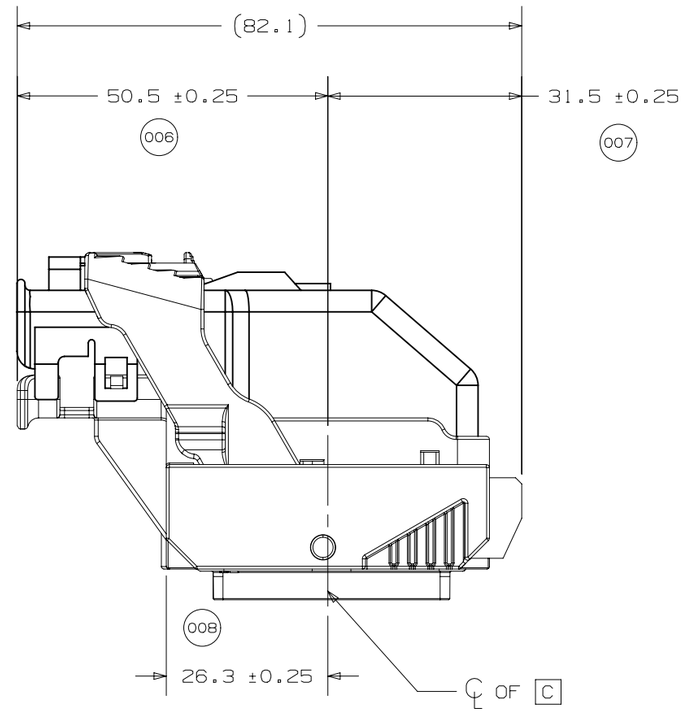

WIRE DRESS OPTION 9 SHOWN

GM	PAGE TITLE LOCATION AND PACKAGING DIMENSIONS REFERENCING INTERFACE DATUMS B & C		DRAWING NUMBER 12642694	DWG STATUS			PAGE NUMBER
				ST	REV	PDI	
				R	001		9 OF 22

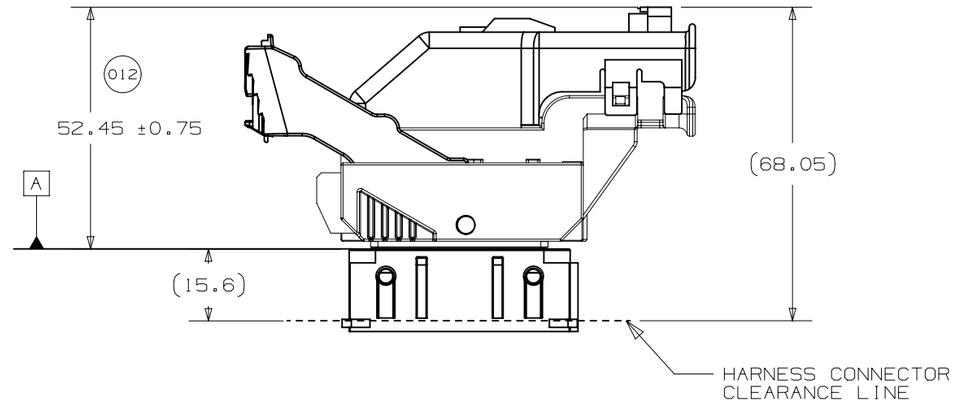

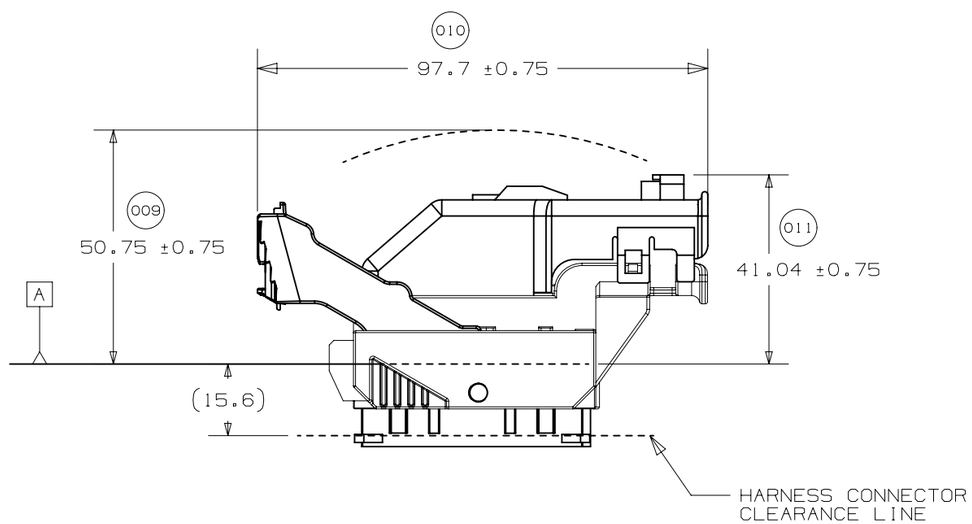

HARNESS CONNECTOR ASSEMBLY
IN PRE-LOCK POSITION

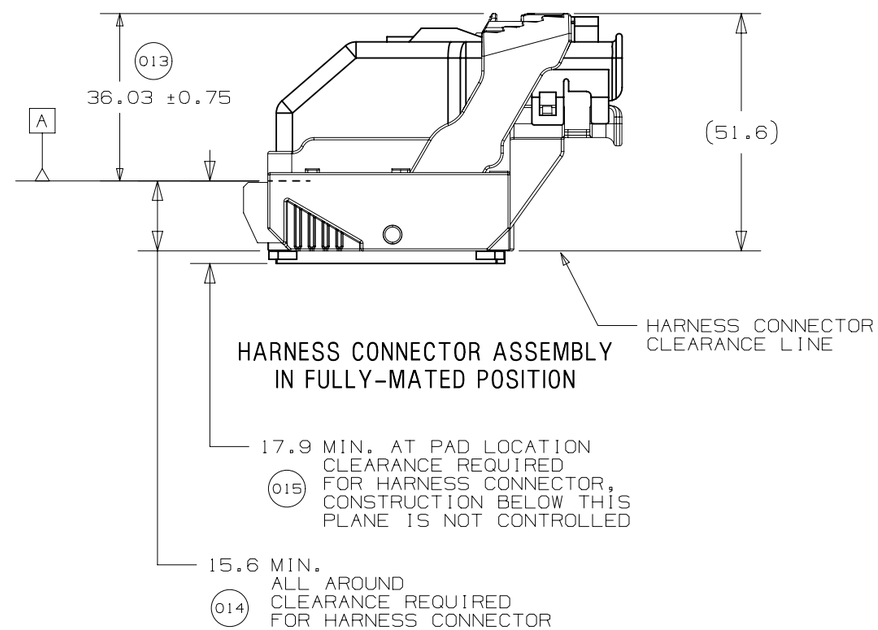

HARNESS CONNECTOR ASSEMBLY
IN FULLY-MATED POSITION

GM	PAGE TITLE LOCATION AND PACKAGING DIMENSIONS REFERENCING INTERFACE DATUM A		DRAWING NUMBER 12642694	DWG STATUS			PAGE NUMBER
				ST	REV	PDI	
				R	001		10 OF 22

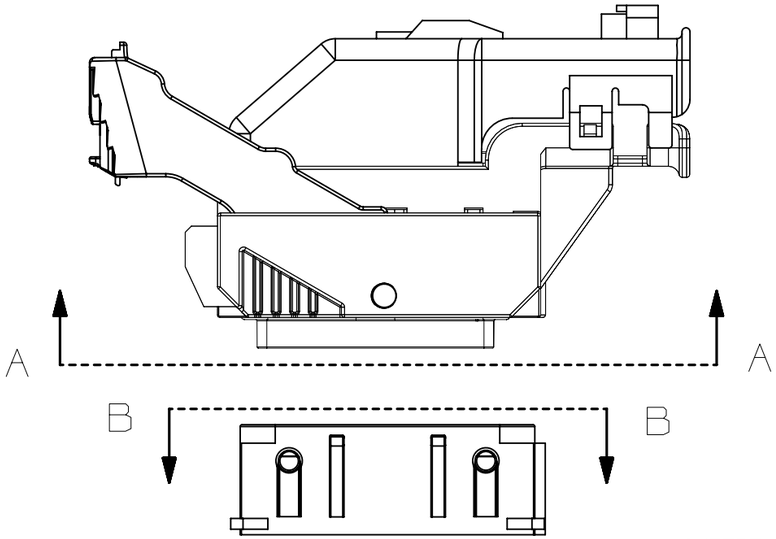

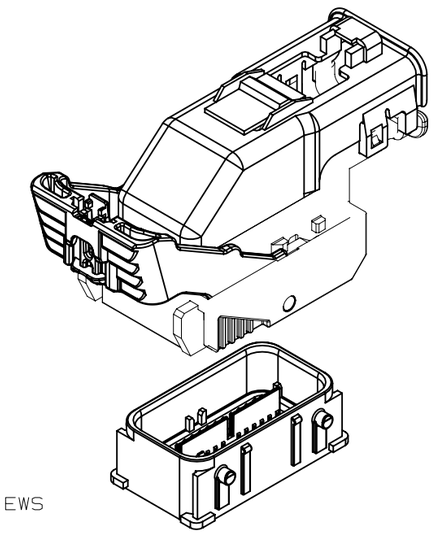

NOTE: REFERENCE THE COMPONENT TABLE
FOR KEY OPTIONS AND CONFIGURATIONS

INTERFACE SIDE SHOWN IN ALL SECTION VIEWS

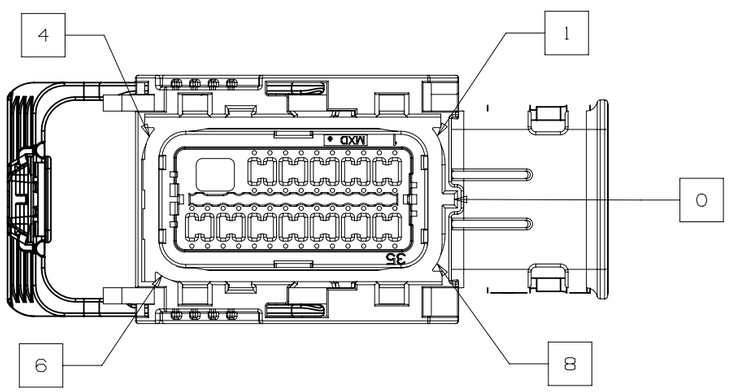

SECTION A-A
KEY OPTION B SHOWN

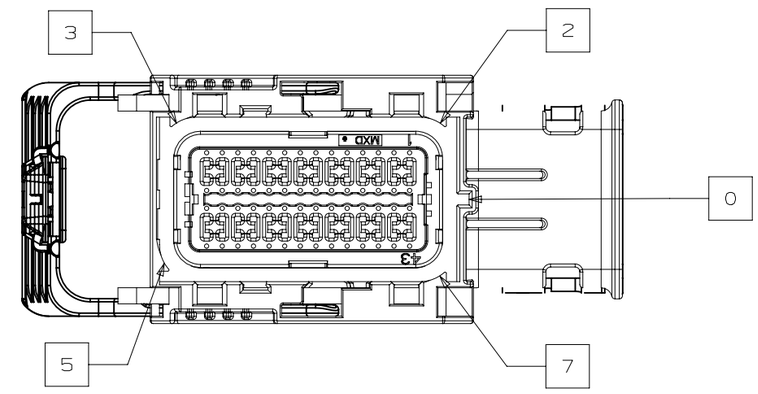

SECTION A-A
KEY OPTION K SHOWN

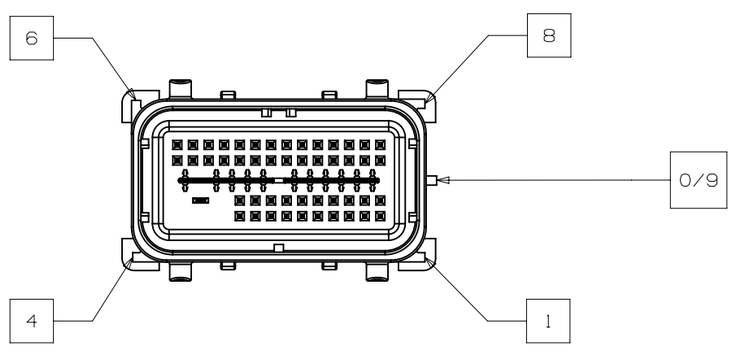

SECTION B-B
KEY OPTION B SHOWN

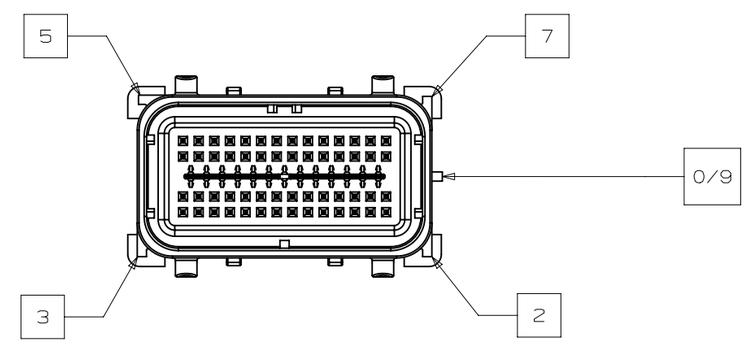

SECTION B-B
KEY OPTION K SHOWN

GM	PAGE TITLE KEY ID REF - WIRE DRESS OPTION 0		DRAWING NUMBER 12642694	DWG STATUS			PAGE NUMBER
				ST	REV	PDI	
				R	001		11 OF 22

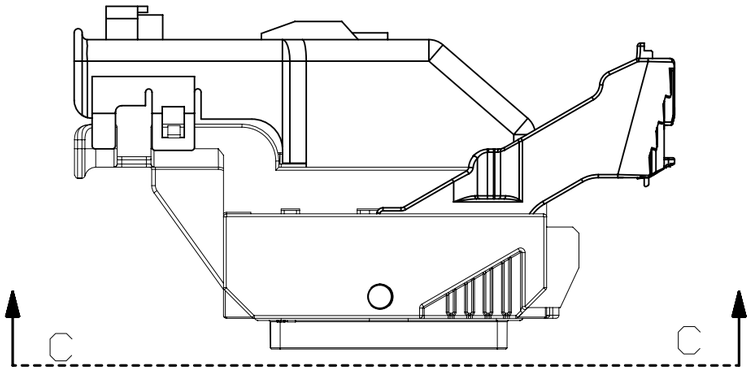

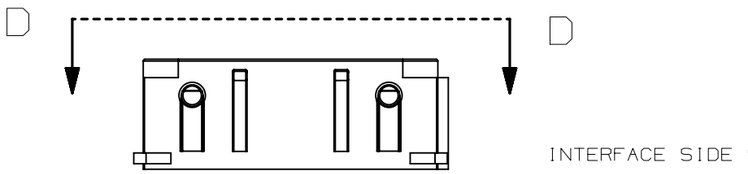

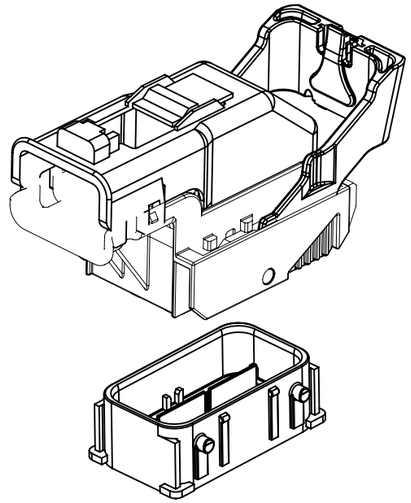

NOTE: REFERENCE THE COMPONENT TABLE
FOR KEY OPTIONS AND CONFIGURATIONS

INTERFACE SIDE SHOWN ON ALL SECTION VIEWS

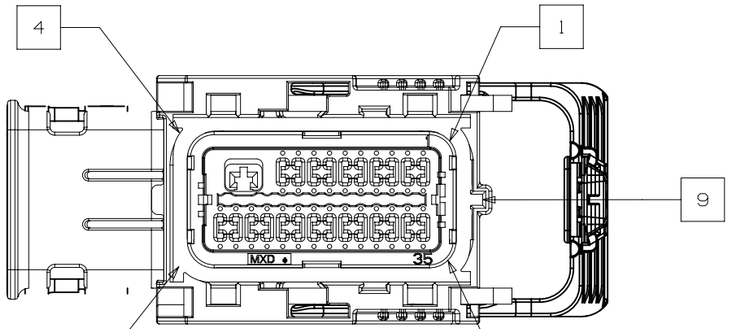

SECTION C-C
KEY OPTION B SHOWN

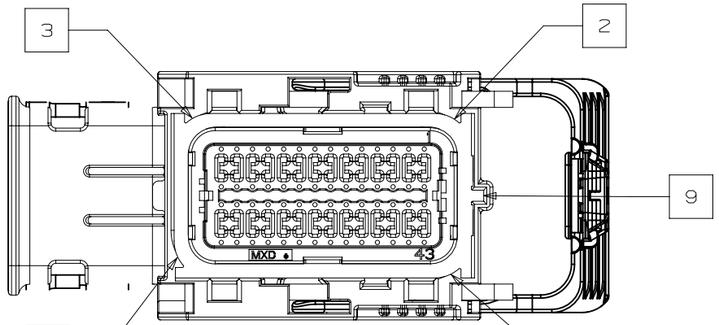

SECTION C-C
KEY OPTION K SHOWN

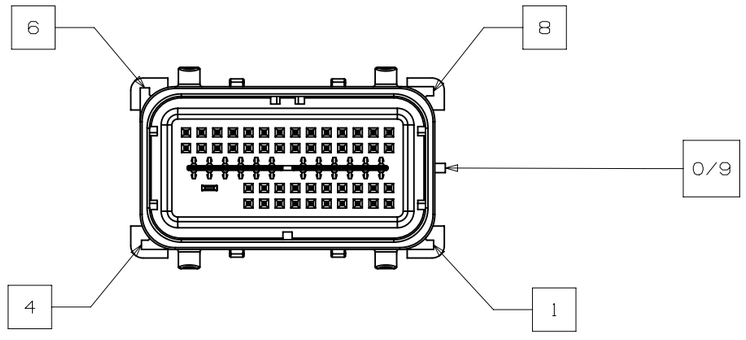

SECTION D-D
KEY OPTION B SHOWN

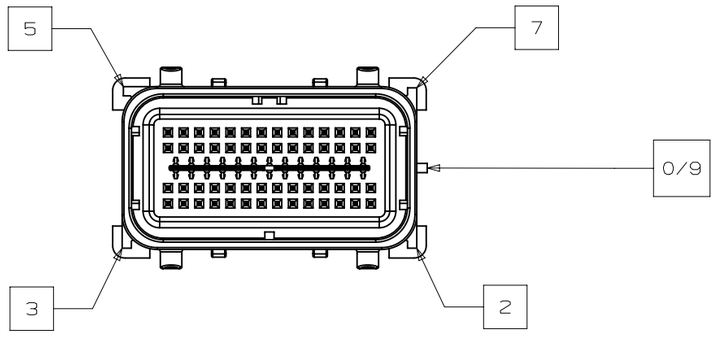

SECTION D-D
KEY OPTION K SHOWN

GM	PAGE TITLE KEY ID REF - WIRE DRESS OPTION 9		DRAWING NUMBER 12642694	DWG STATUS ST: R	REV: 001	PDI:	PAGE NUMBER 12 OF 22

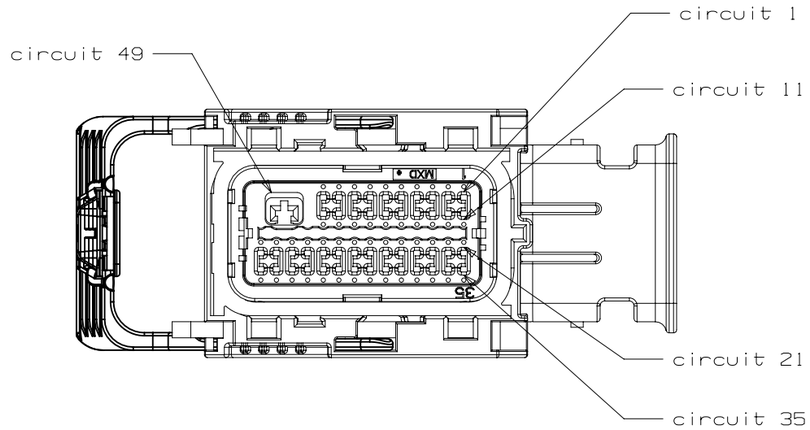

49 CKT HARNESS CONNECTOR ASSEMBLY
WIRE DRESS OPTION 0

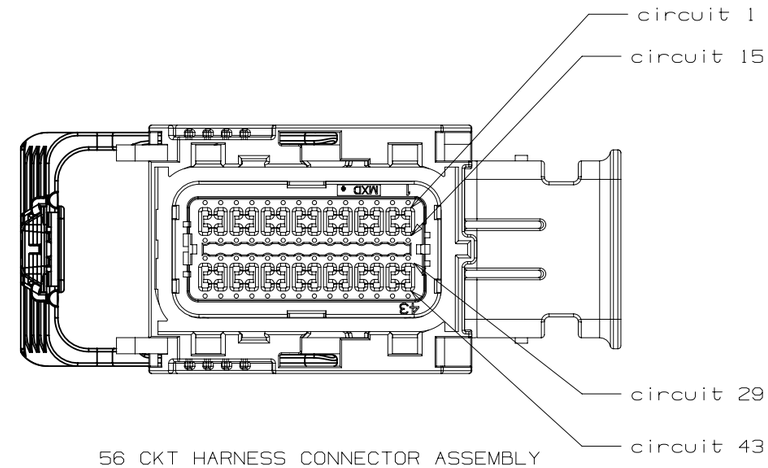

56 CKT HARNESS CONNECTOR ASSEMBLY
WIRE DRESS OPTION 0

INTERFACE SIDE SHOWN ON ALL VIEWS

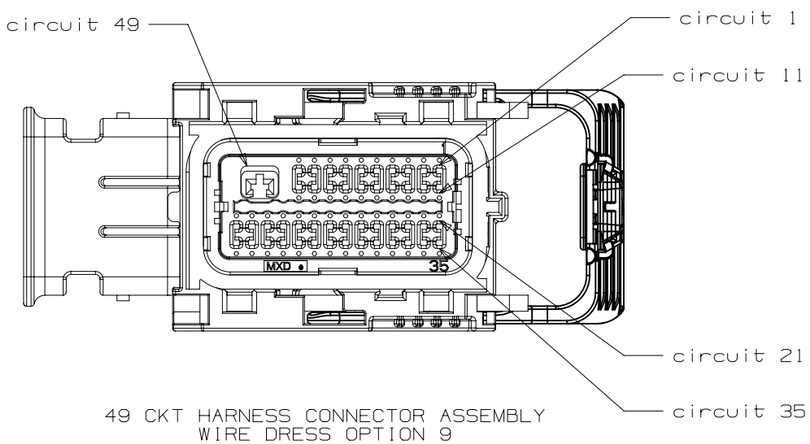

49 CKT HARNESS CONNECTOR ASSEMBLY
WIRE DRESS OPTION 9

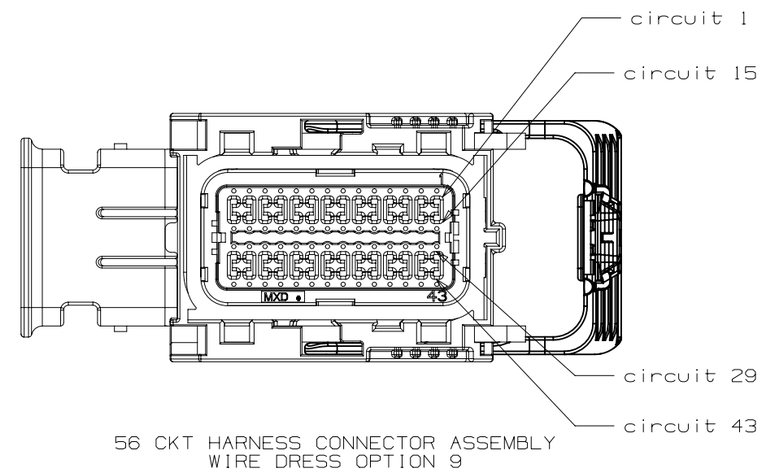

56 CKT HARNESS CONNECTOR ASSEMBLY
WIRE DRESS OPTION 9

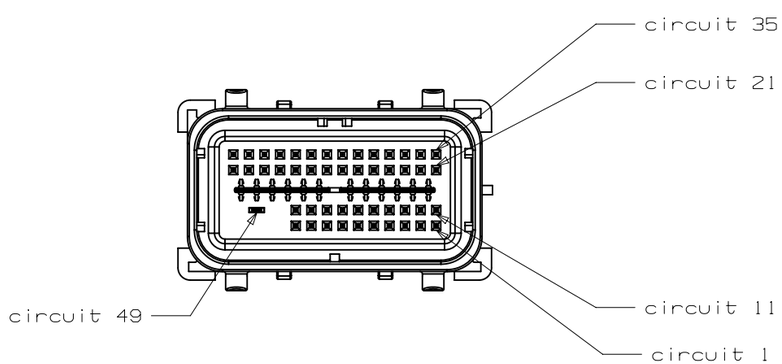

49 CKT COMPONENT CONNECTOR INTERFACE

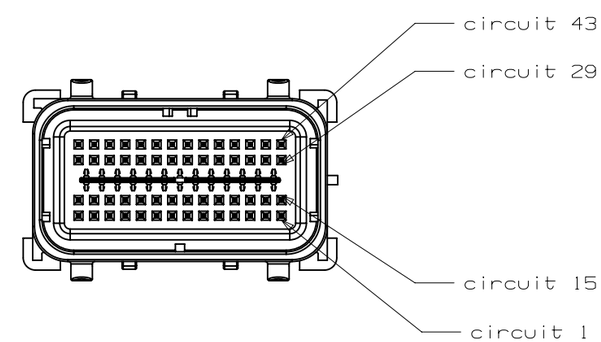

56 CKT COMPONENT CONNECTOR INTERFACE

	PAGE TITLE	DRAWING NUMBER	DWG STATUS			PAGE NUMBER
GM	CIRCUIT CONFIGURATIONS	12642694	ST	REV	PDI	13 OF 22
			R	001		

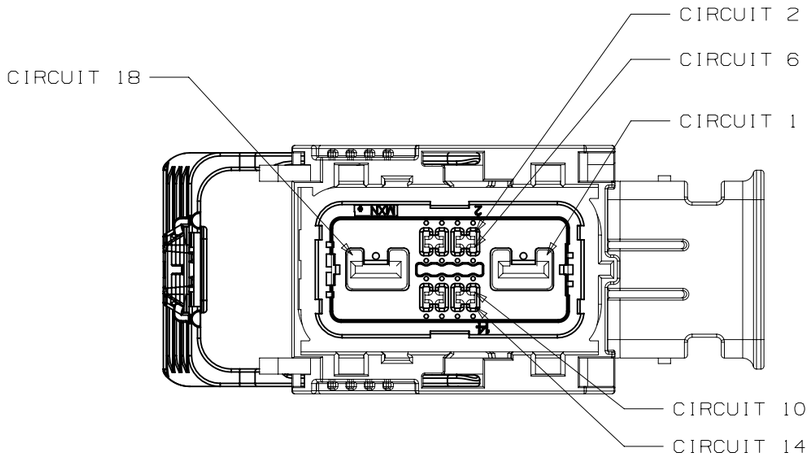

18 CKT HARNESS CONNECTOR ASSEMBLY
WIRE DRESS OPTION 0

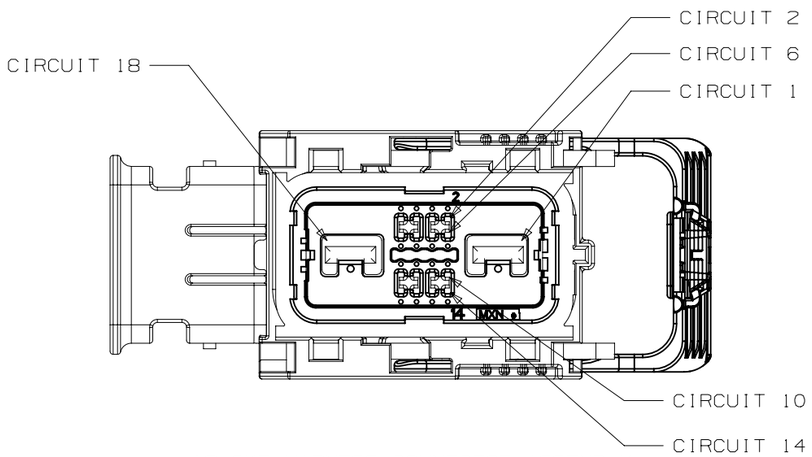

18 CKT HARNESS CONNECTOR ASSEMBLY
WIRE DRESS OPTION 9

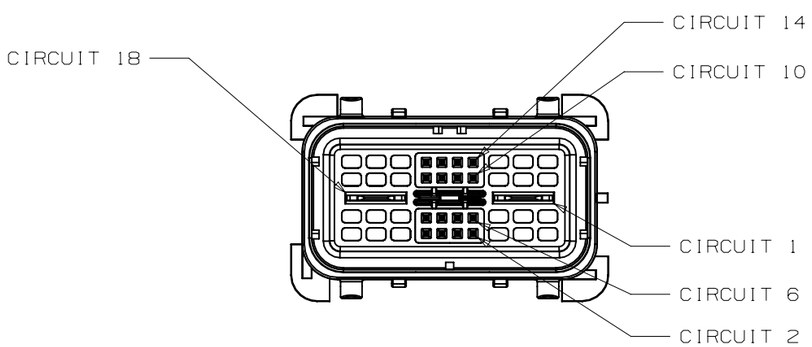

18 CKT COMPONENT CONNECTOR INTERFACE

INTERFACE SIDE SHOWN ON ALL VIEWS

	PAGE TITLE		DRAWING NUMBER	DWG STATUS			PAGE NUMBER
GM	CIRCUIT CONFIGURATIONS		12642694	ST	REV	PDI	14 OF 22
				R	001		

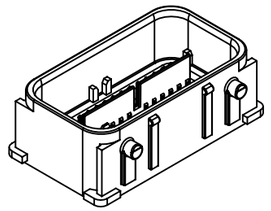

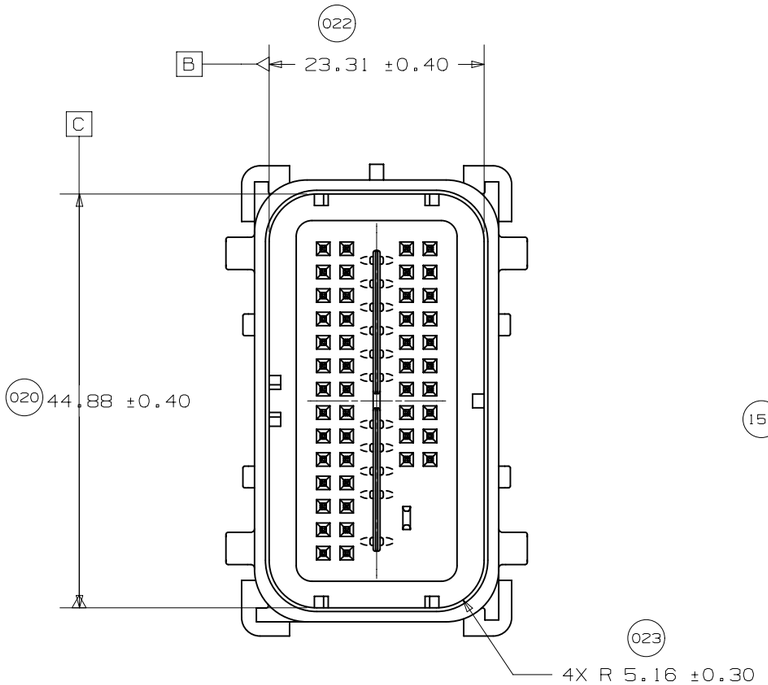

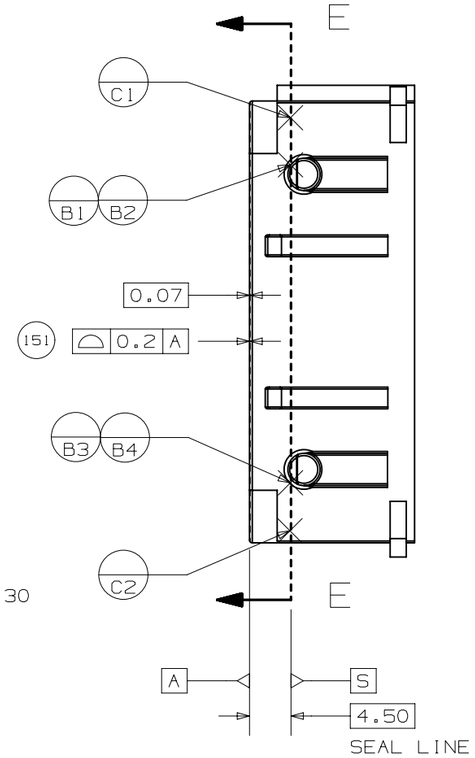

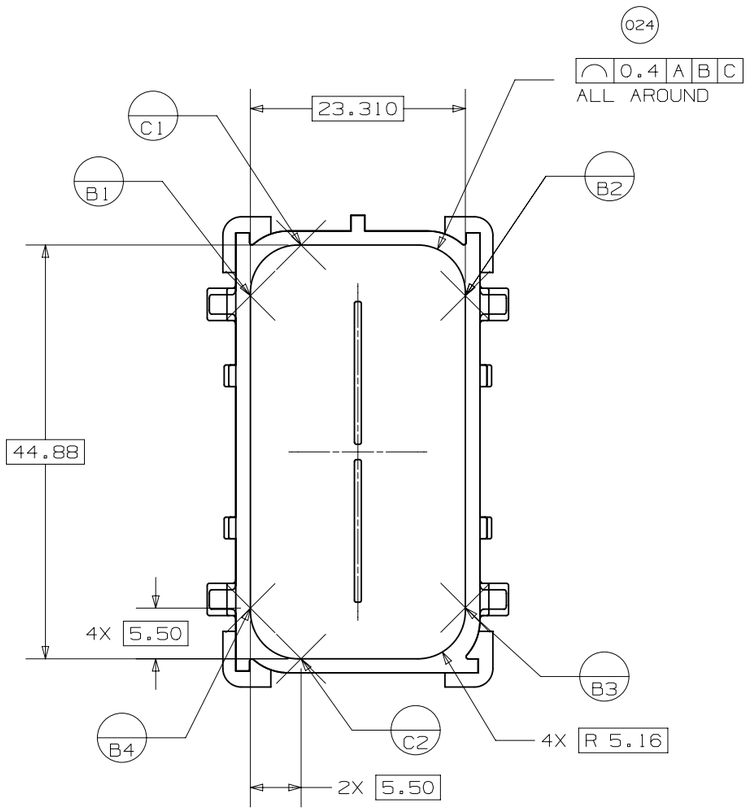

SECTION E-E
(AT SEAL LINE)

UNLESS SPECIFIED, TOLERANCE OF THE DEVICE INTERFACE TO BE 0.13 A B C

GM	PAGE TITLE COMPONENT CONNECTOR INTERFACE		DRAWING NUMBER 12642694	DWG STATUS			PAGE NUMBER
				ST	REV	PDI	
				R	001		15 OF 22

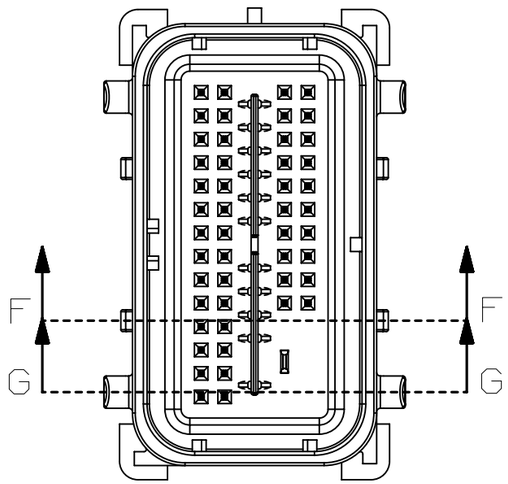

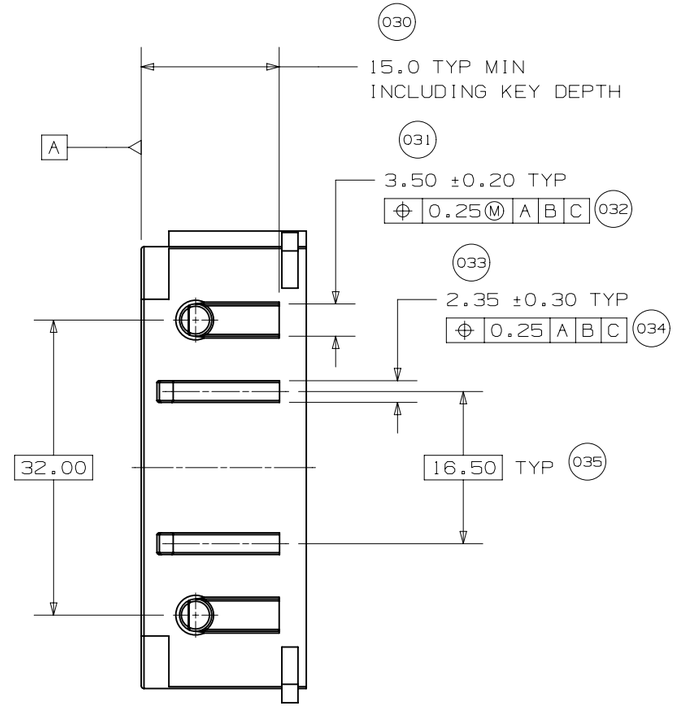

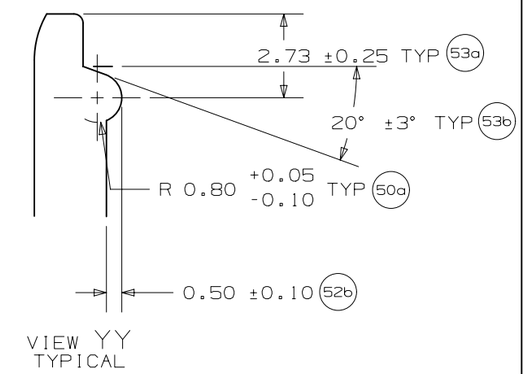

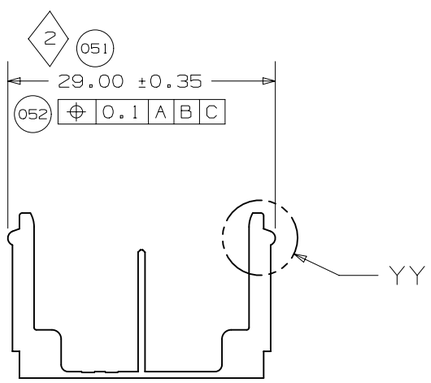

SECTION F-F
(RELEASE FEATURE)

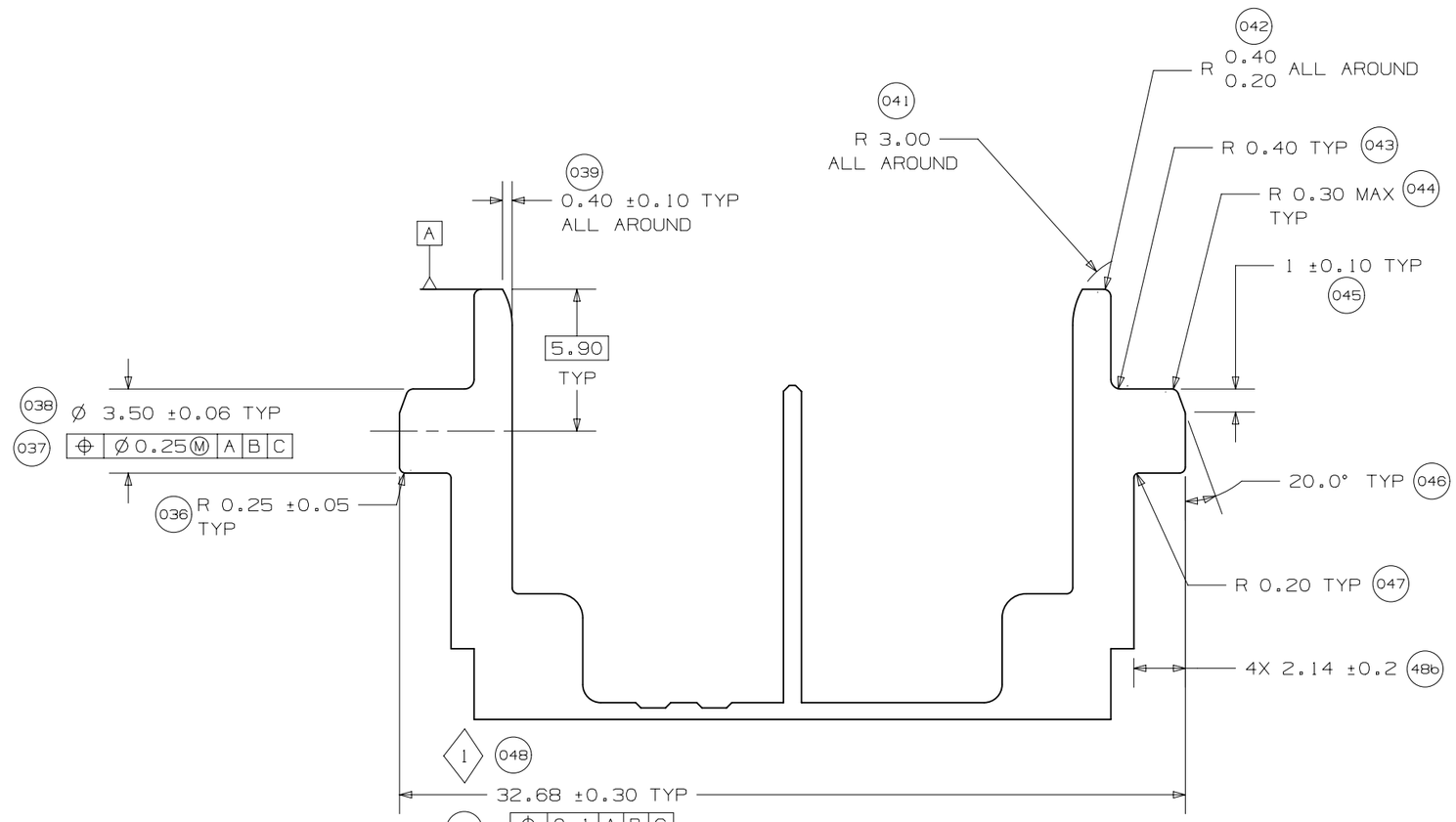

SECTION G-G
(CAM POST)

GM	PAGE TITLE COMPONENT CONNECTOR INTERFACE		DRAWING NUMBER 12642694	DWG STATUS ST: R REV: 001 PDI:		PAGE NUMBER 16 OF 22

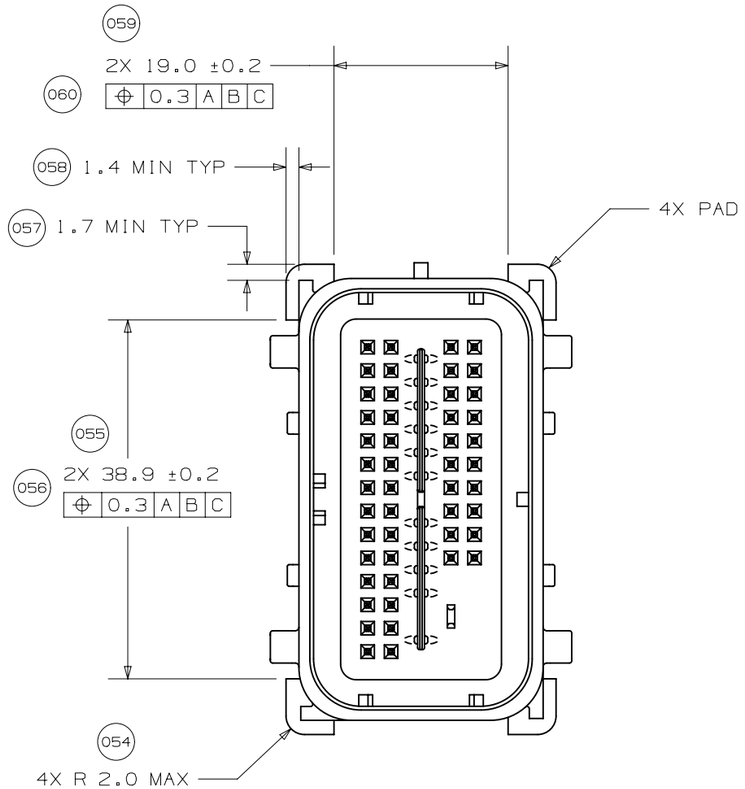

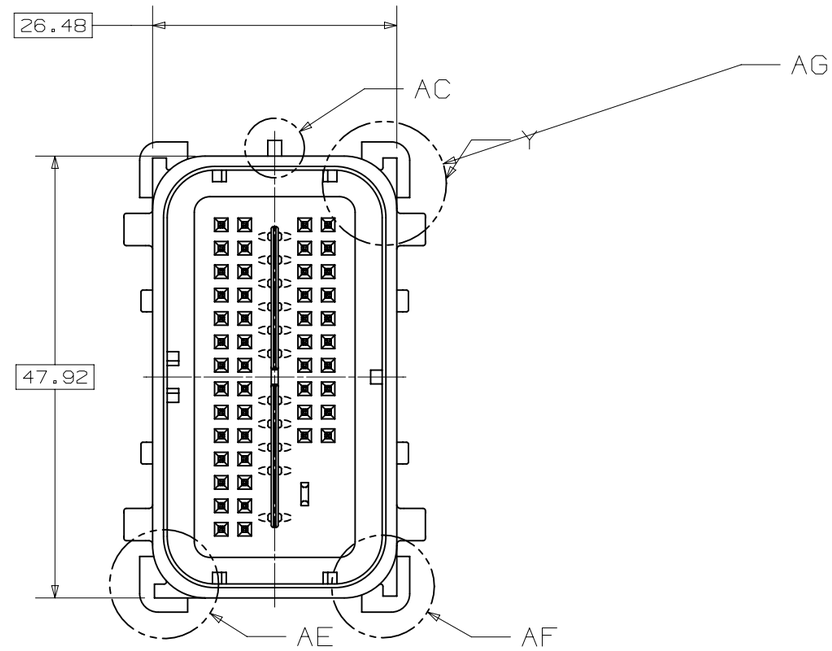

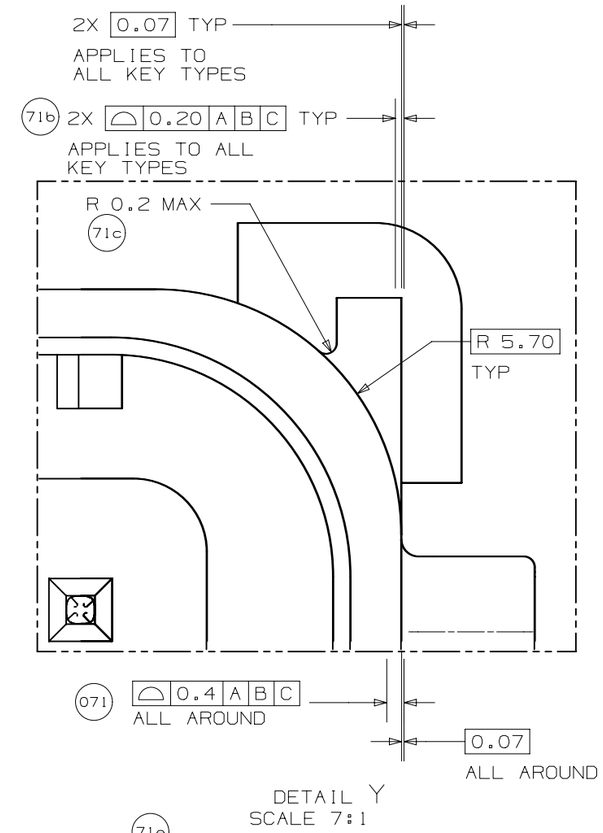

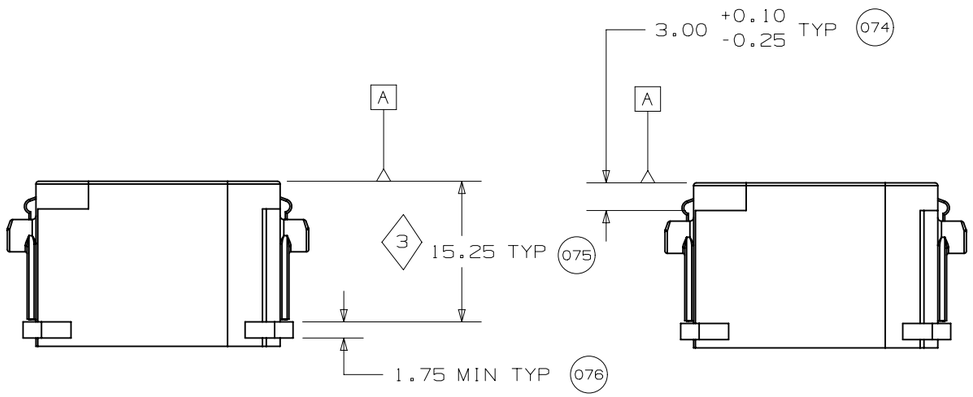

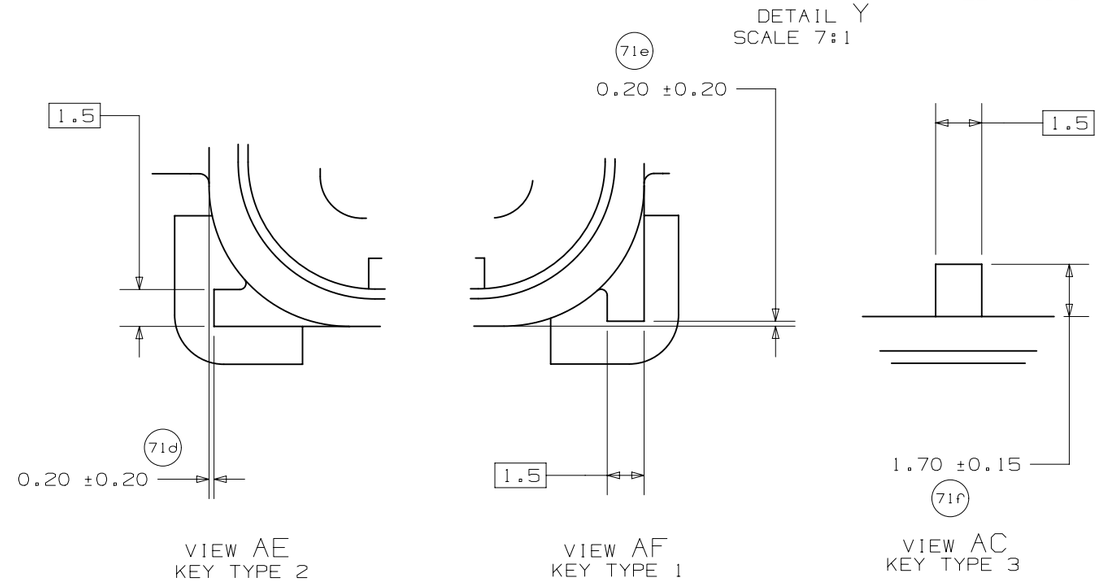

GM	PAGE TITLE COMPONENT CONNECTOR INTERFACE		DRAWING NUMBER 12642694	DWG STATUS ST: R REV: 001 PDI:	PAGE NUMBER 17 OF 22	

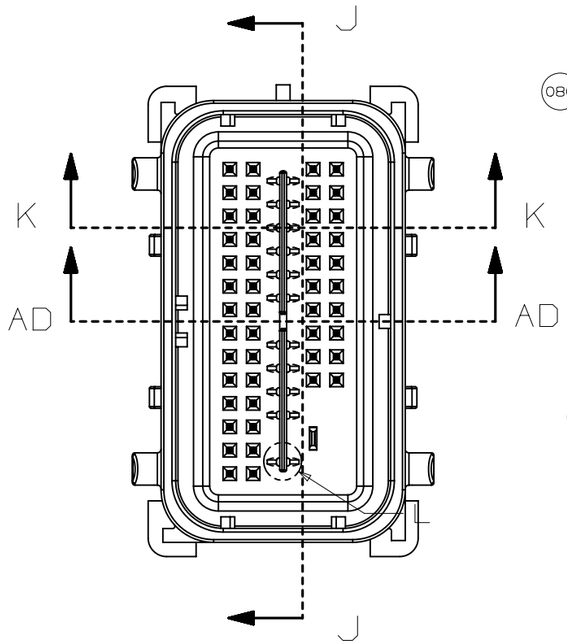

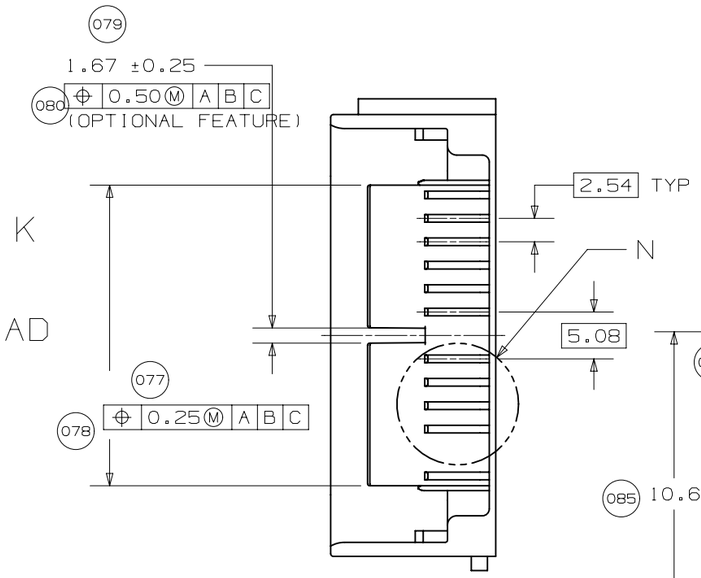

SECTION J-J

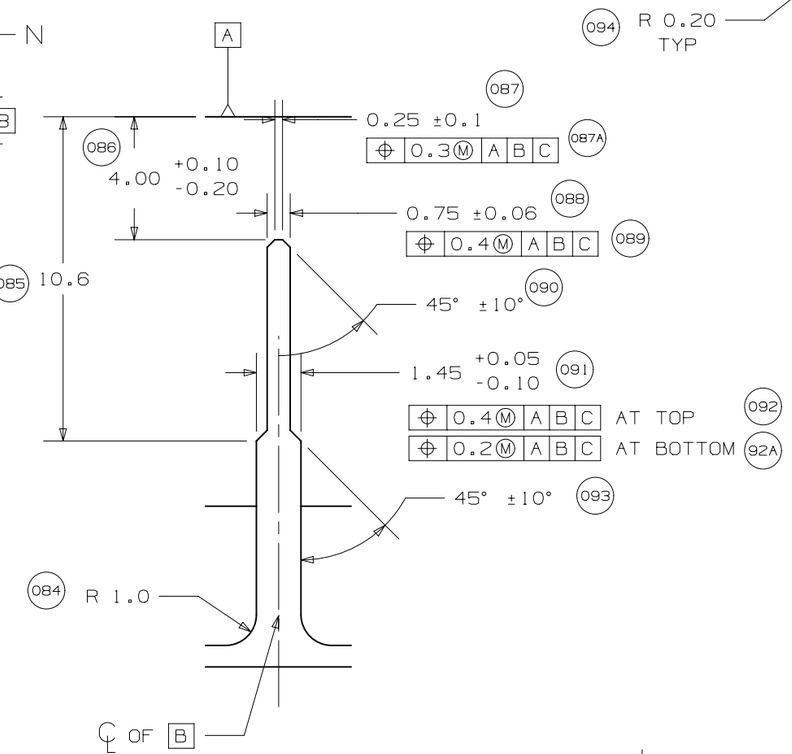

VIEW M
TYPICAL

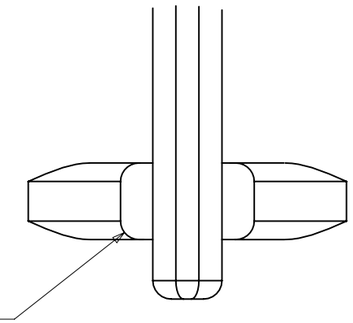

VIEW L

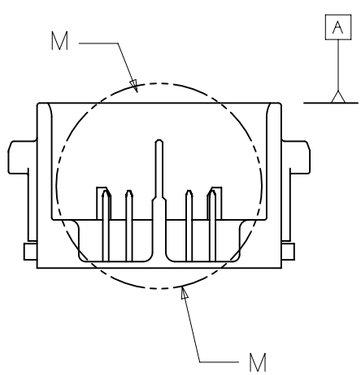

SECTION K-K

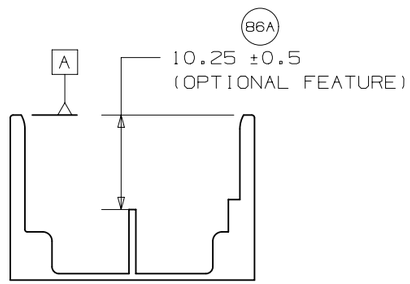

SECTION AD-AD

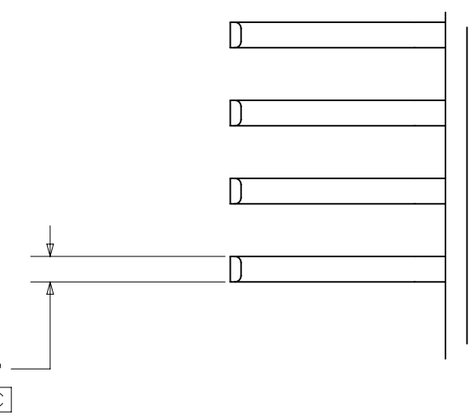

VIEW N

CKT	DIM 077
49 / 56 CKT	32.60 +0.10/-0.80
18 CKT	10.04 +0.10/-0.80

GM	PAGE TITLE COMPONENT CONNECTOR INTERFACE		DRAWING NUMBER 12642694	DWG STATUS ST: R	REV: 001	PDI:	PAGE NUMBER 18 OF 22

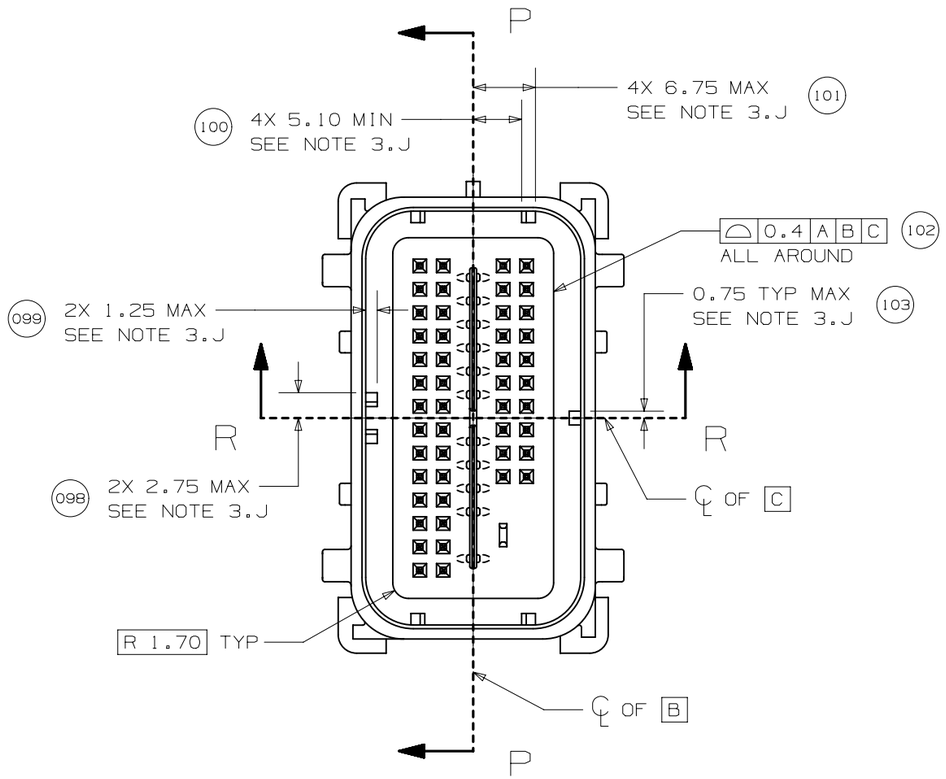

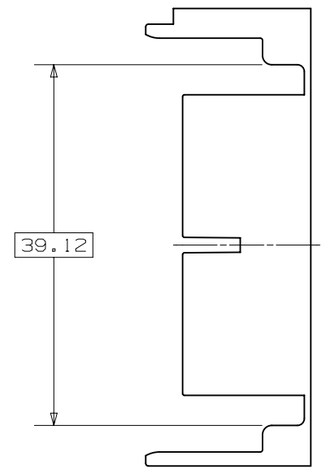

SECTION P-P

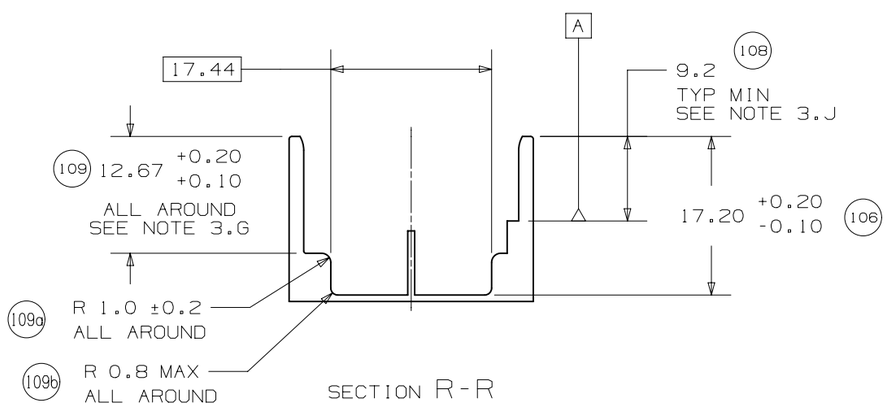

SECTION R-R

GM	PAGE TITLE COMPONENT CONNECTOR INTERFACE		DRAWING NUMBER 12642694	DWG STATUS ST: R	REV: 001	PDI:	PAGE NUMBER 19 OF 22

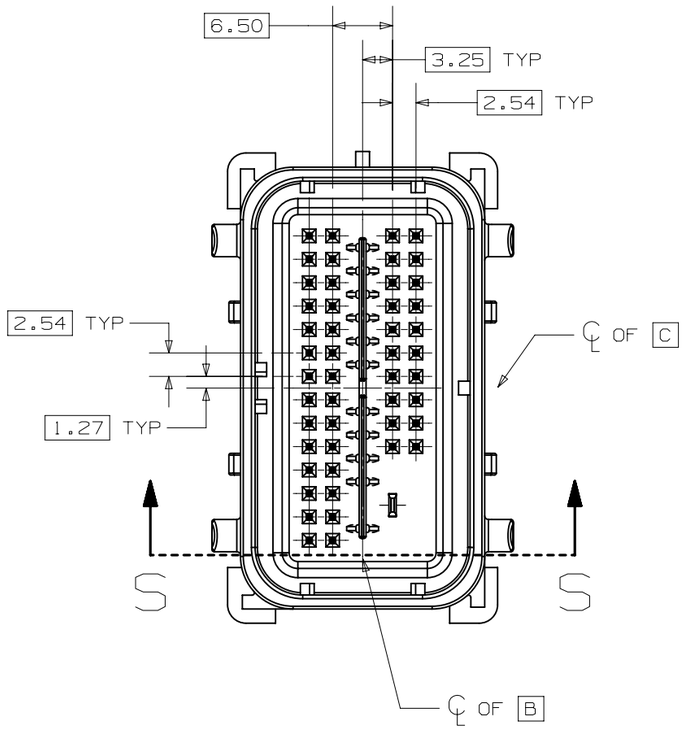

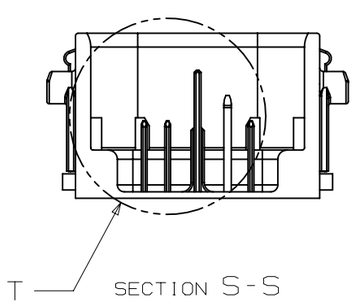

SECTION S-S

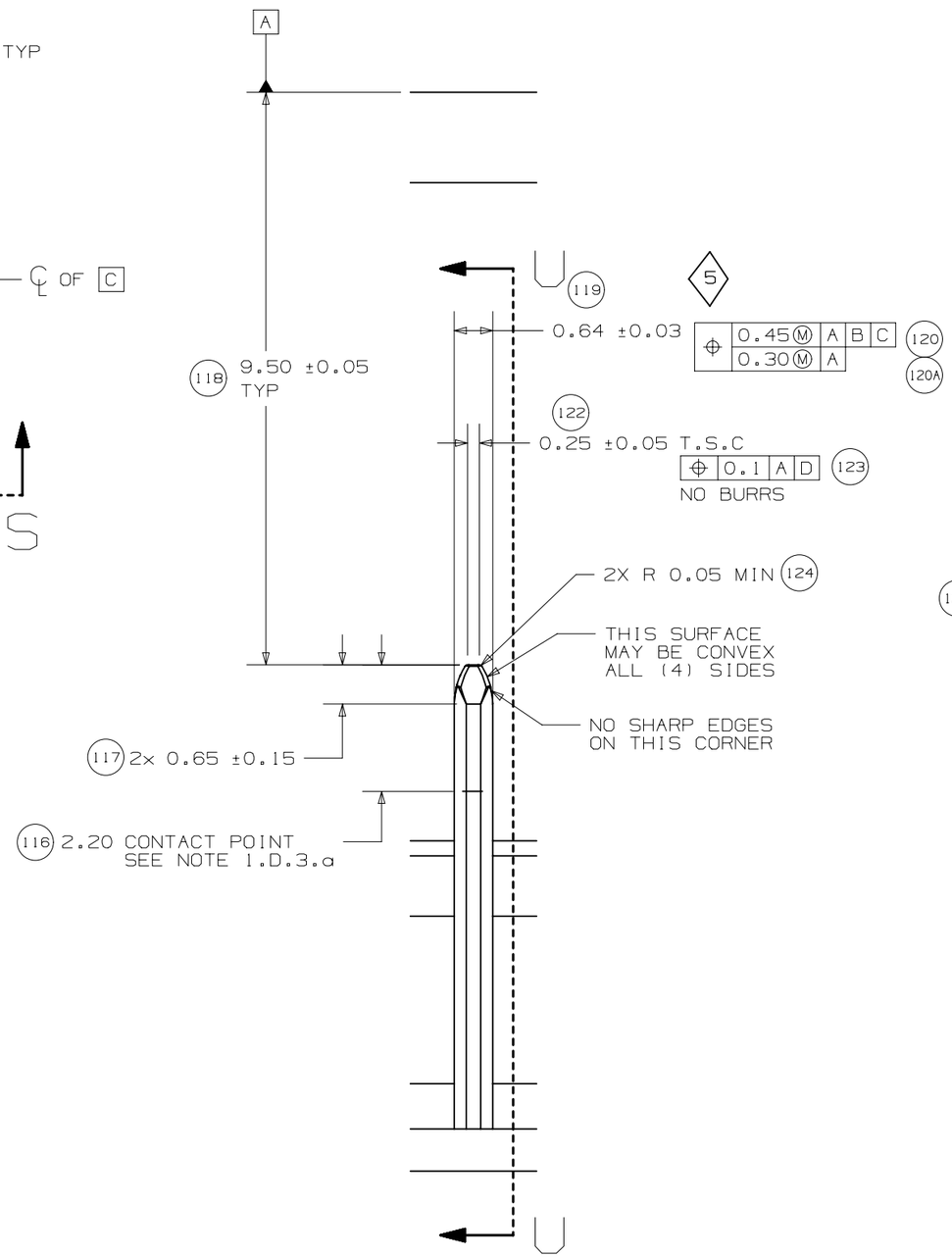

DETAIL T
TYPICAL

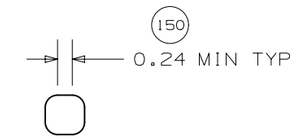

SECTION BB-BB

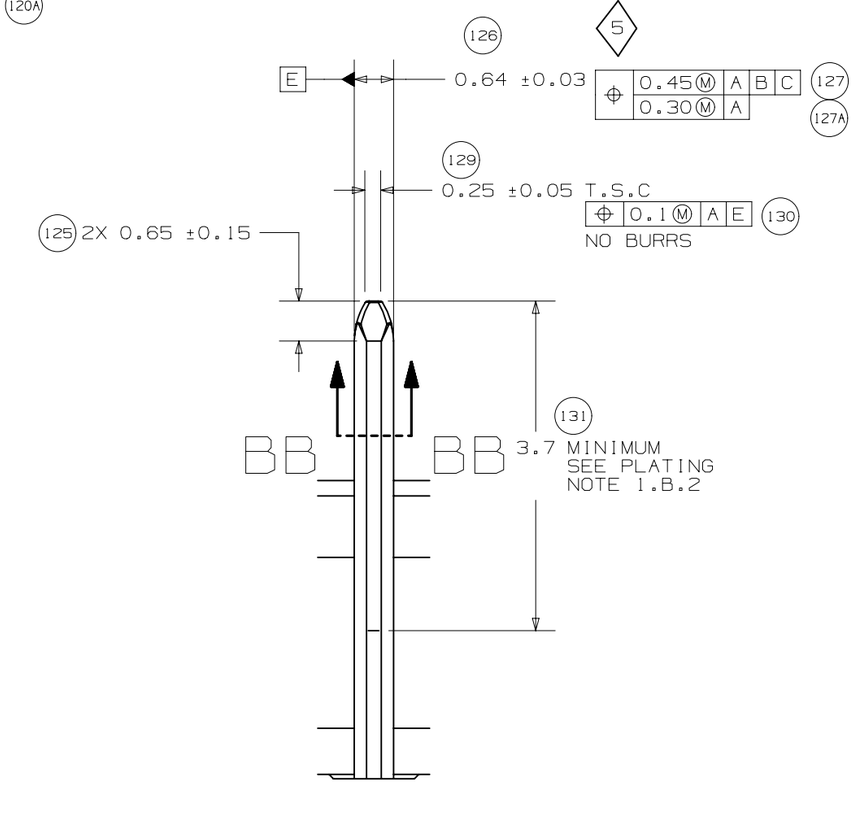

SECTION U-U
TYPICAL

GM	PAGE TITLE COMPONENT CONNECTOR INTERFACE		DRAWING NUMBER 12642694	DWG STATUS			PAGE NUMBER
				ST	REV	PDI	
				R	001		20 OF 22

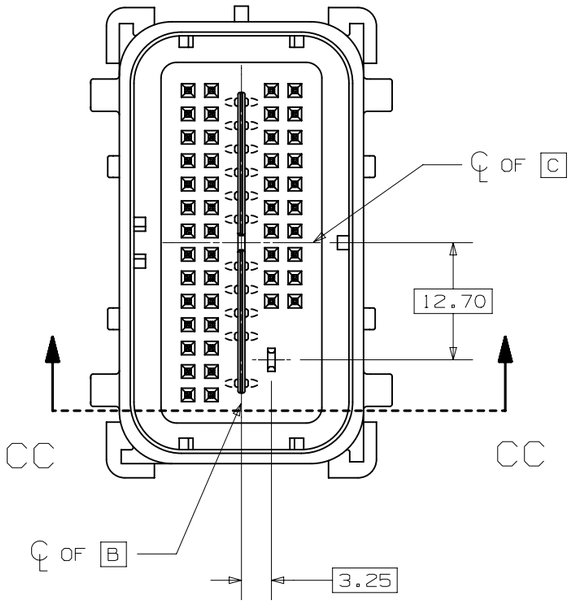

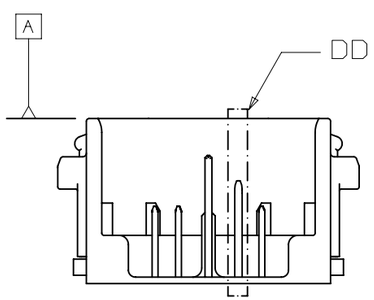

SECTION CC-CC

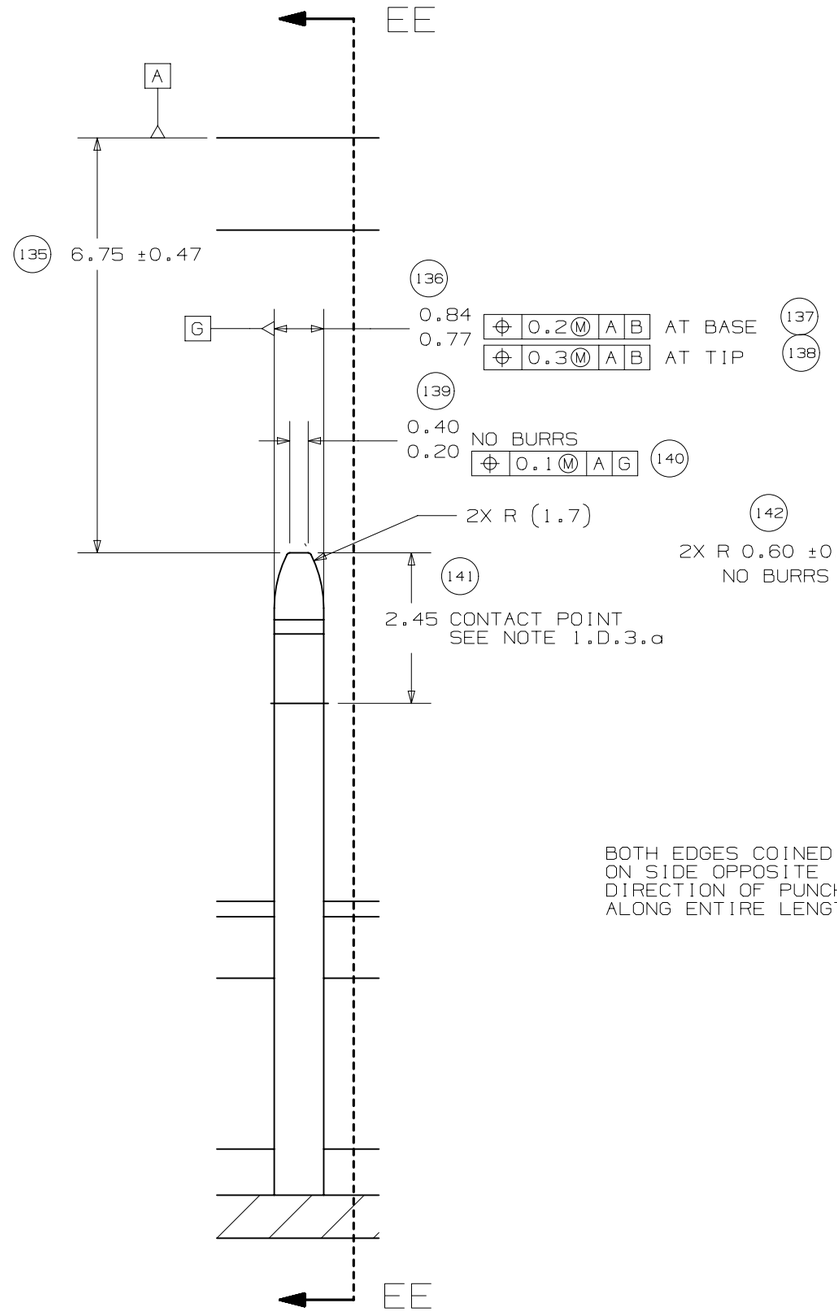

DETAIL DD
TYPICAL

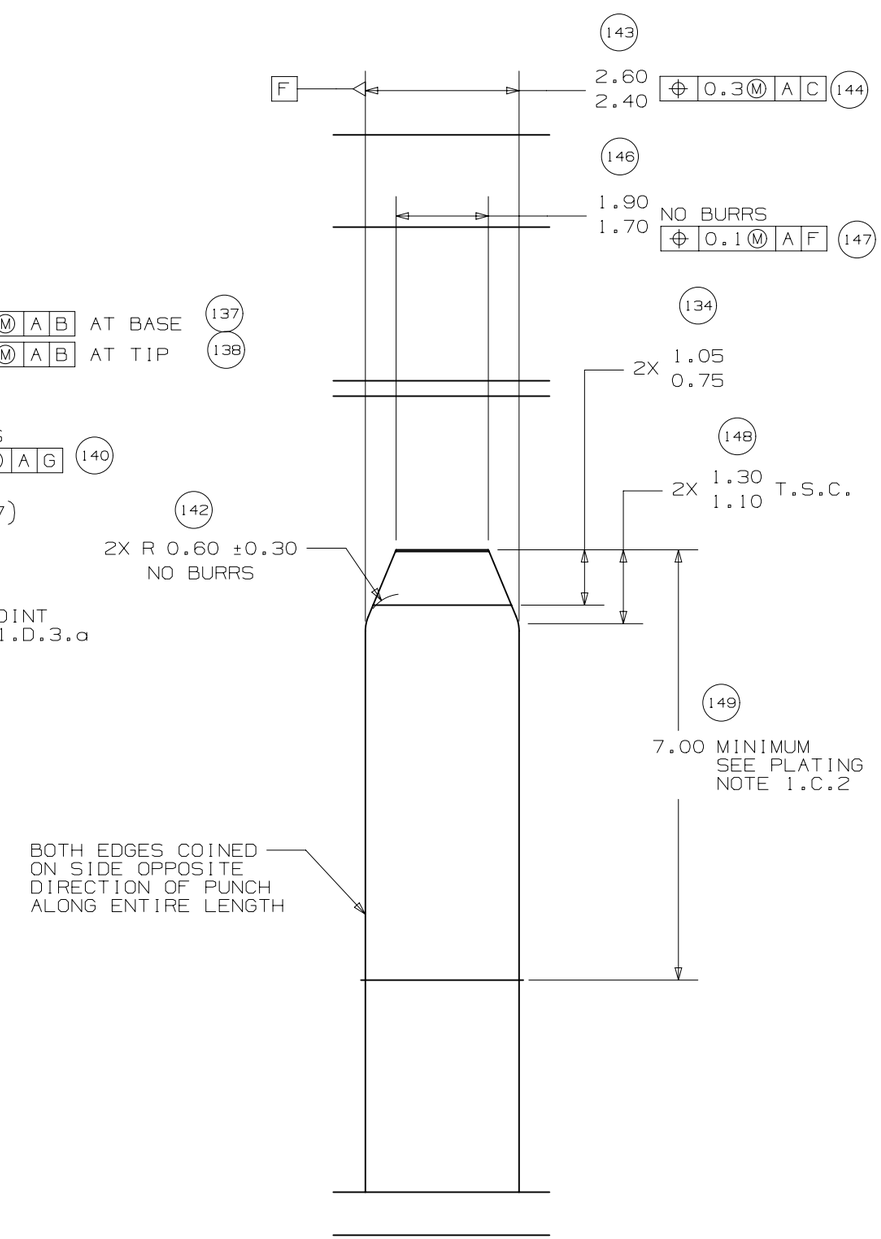

SECTION EE-EE
TYPICAL

GM	PAGE TITLE COMPONENT CONNECTOR INTERFACE		DRAWING NUMBER 12642694	DWG STATUS			PAGE NUMBER
				ST	REV	PDI	
				R	001		21 OF 22

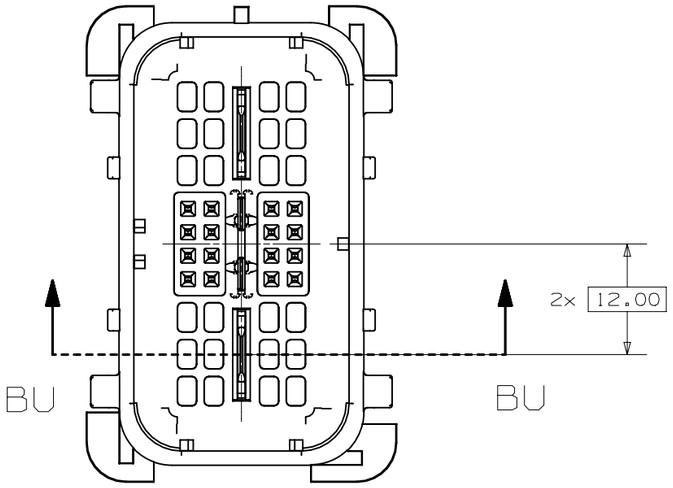

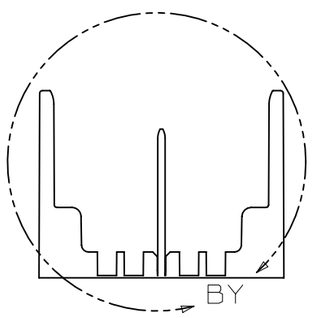

SECTION BU-BU

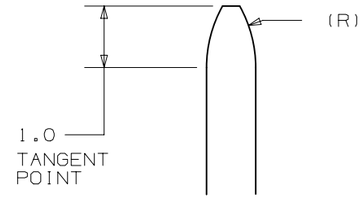

VIEW CA
SCALE 10:1

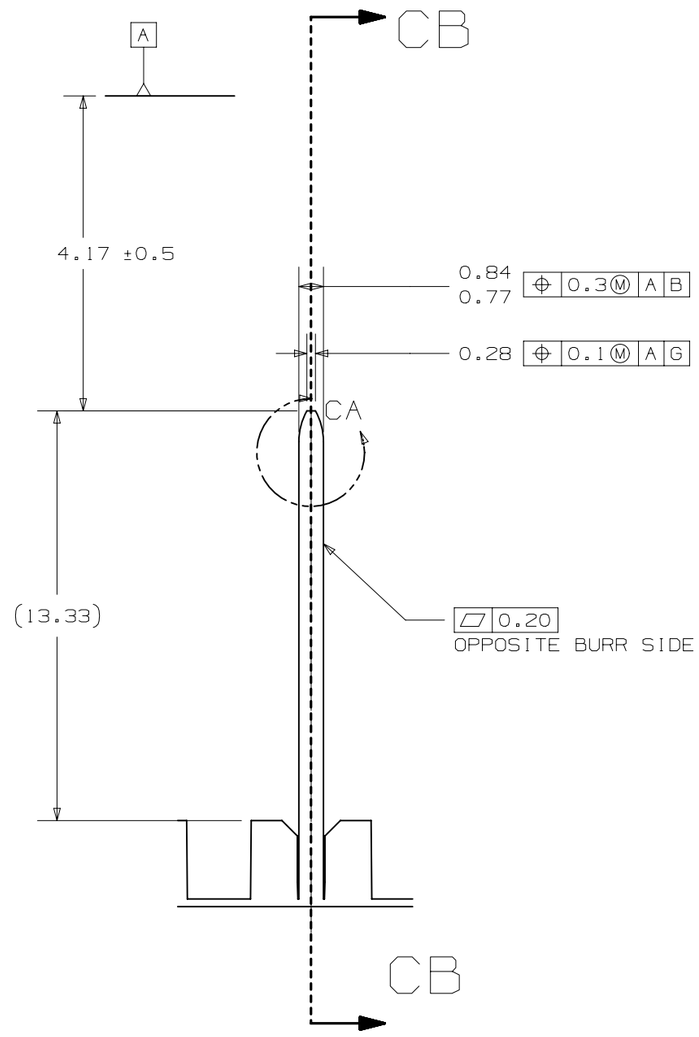

VIEW BY
SCALE 5:1

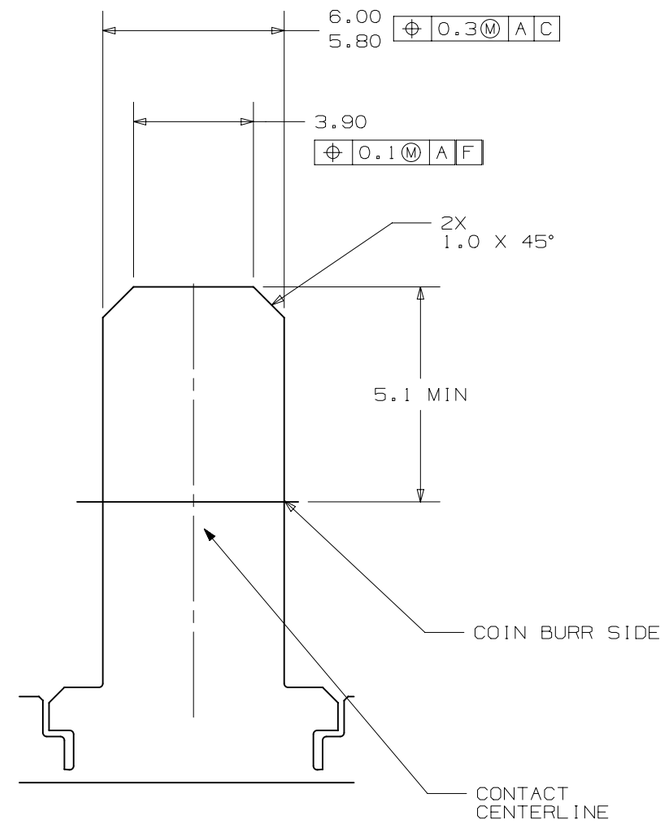

SECTION CB-CB

GM	PAGE TITLE COMPONENT CONNECTOR INTERFACE		DRAWING NUMBER 12642694	DWG STATUS			PAGE NUMBER
				ST	REV	PDI	
				R	001		22 OF 22

molex

MX123 SEALED RCPT ASSY (18 Ckt)
BOM & PIN OUT SHEET

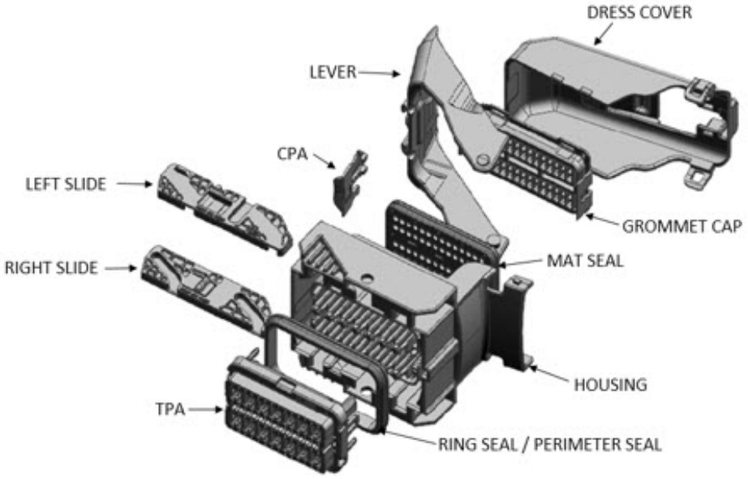

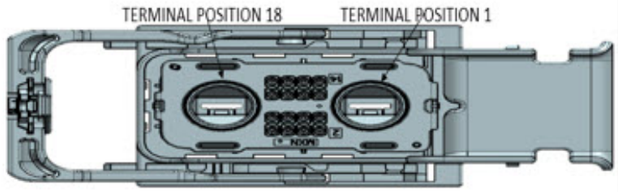

ABBREVIATION	DESCRIPTION	COLOR	MATERIAL
G-CAP-0-P	GROMMET CAP OPTION 0 PLUGGED	BLACK	SPS/PA, G.F 30%
G-CAP-0-O	GROMMET CAP OPTION 0 ALL OPEN	BLACK	SPS/PA, G.F 30%
G-CAP-9-P	GROMMET CAP OPTION 9 PLUGGED	BLACK	SPS/PA, G.F 30%
G-CAP-9-O	GROMMET CAP OPTION 9 ALL OPEN	BLACK	SPS/PA, G.F 30%
C-HSG-G0	CONNECTOR HOUSING KEY G - WDC OPT 0	BLACK1	SPS/PA, G.F 30%
C-HSG-H0	CONNECTOR HOUSING KEY H- WDC OPT 0	BLACK	SPS/PA, G.F 30%
C-HSG-G9	CONNECTOR HOUSING KEY G- WDC OPT 9	BLACK	SPS/PA, G.F 30%
C-HSG-H9	CONNECTOR HOUSING KEY H- WDC OPT 9	BLACK	SPS/PA, G.F 30%
TPA-G0	TERMINAL POSITION ASSURANCE (TPA) OPTION 0	BLUE	SPS/PA, G.F 30%
TPA-H0	TERMINAL POSITION ASSURANCE (TPA) OPTION 0	STONE GRAY	SPS/PA, G.F 30%
TPA-G9	TERMINAL POSITION ASSURANCE (TPA) OPTION 9	BLUE	SPS/PA, G.F 30%
TPA-H9	TERMINAL POSITION ASSURANCE (TPA) OPTION 9	STONE GRAY	SPS/PA, G.F 30%
MAL	MATE ASSIST LEVER	BLACK	SPS/NYLON GF30
RS	SLIDE - RIGHT	BLACK	PPE/PA, G.F. 30%
LS	SLIDE - LEFT	BLACK	PPE/PA, G.F. 30%
CVR BLACK	DRESS COVER BLACK	BLACK	PBT, G.F. 30%
CVR GRAY	DRESS COVER GRAY	GRAY	PBT, G.F. 30%
CVR BLUE	DRESS COVER BLUE	BLUE	PBT, G.F. 30%
CVR BROWN	DRESS COVER BROWN	BROWN	PBT, G.F. 30%
CVR GREEN	DRESS COVER GREEN	GREEN	PBT, G.F. 30%
CVR NATURAL	DRESS COVER NATURAL	NATURAL	PBT, G.F. 30%
CVR YELLOW	DRESS COVER YELLOW	YELLOW	PBT, G.F. 30%
CPA	CONNECTOR POSITION ASSURANCE (CPA)	RED	PPE/PA 10% GF
MSEAL	MAT SEAL	RUST RED	INHERENTLY LUBRICATED SILICONE RUBBER
RSEAL	RING SEAL	RUST RED	INHERENTLY LUBRICATED SILICONE RUBBER

FOR ADDITIONAL INFOMRATION SEE SD-34576-001

ASSEMBLY DESCRIPTION	ASSEMBLY PART NUMBER	CONNECTOR HOUSING	GROMMET CAP	TPA	RIGHT SLIDE	LEFT SLIDE	MATE ASSIST LEVER	CPA	MAT SEAL	RING SEAL	BLOCKED TERMINALS CAVITY WITH A NUMBER INDICATES BLOCKED TERMINAL POSITION CAVITY WITHOUT A NUMBER INDICATES OPEN TERMINAL POSITION						STATUS	COMMENTS	INTEGRAL COMPONENTS SOLD SEPARATELY DRESS COVER
MX123 CONN ASSY 18 CKT BLU OPT0 KEY G/18	348510007	C-HSG-G0	G-CAP-0-P	TPA-G0	RS	LS	MAL	CPA	MSEAL	RSEAL	-	-	-	-	-	-	SALEABLE		345750003
												-	-	-	-				
												-	-	-	-				
												-	-	-	-				
MX123 CONN ASSY 18 CKT GRY OPT0 KEY H/18	348510008	C-HSG-H0	G-CAP-0-P	TPA-H0	RS	LS	MAL	CPA	MSEAL	RSEAL	-	-	-	-	-	-	SALEABLE		345750003
												-	-	-	-				
												-	-	-	-				
												-	-	-	-				
MX123 CONN ASSY 18 CKT BLU OPT9 KEY G/18	348510019	C-HSG-G9	G-CAP-9-P	TPA-G9	RS	LS	MAL	CPA	MSEAL	RSEAL	-	-	-	-	-	-	SALEABLE		345750003
												-	-	-	-				
												-	-	-	-				
												-	-	-	-				
MX123 CONN ASSY 18 CKT GRY OPT9 KEY H/18	348510020	C-HSG-H9	G-CAP-9-P	TPA-H9	RS	LS	MAL	CPA	MSEAL	RSEAL	-	-	-	-	-	-	SALEABLE		345750003
												-	-	-	-				
												-	-	-	-				
												-	-	-	-				
MX123 CONN ASSY 18 CKT BLU OPT0 KEY G/2	348510025	C-HSG-G0	G-CAP-0-P	TPA-G0	RS	LS	MAL	CPA	MSEAL	RSEAL	-	17	16	15	14	-	SALEABLE		345750003
												13	12	11	10				
												9	8	7	6				
												5	4	3	2				
MX123 CONN ASSY 18 CKT GRY OPT0 KEY H/2	348510026	C-HSG-H0	G-CAP-0-P	TPA-H0	RS	LS	MAL	CPA	MSEAL	RSEAL	-	17	16	15	14	-	SALEABLE		345750003
												13	12	11	10				
												9	8	7	6				
												5	4	3	2				
MX123 CONN ASSY 18 CKT BLU OPT0 KEY G/8	348510027	C-HSG-G0	G-CAP-0-P	TPA-G0	RS	LS	MAL	CPA	MSEAL	RSEAL	-	17	16	15	14	-	SALEABLE		345750003
												13	12	11	10				
												-	8	-	-				
												-	4	-	-				

molex

MX123 SEALED RCPT ASSY (18 Ckt)
BOM & PIN OUT SHEET

ASSEMBLY DESCRIPTION	ASSEMBLY PART NUMBER	CONNECTOR HOUSING	GROMMET CAP	TPA	RIGHT SLIDE	LEFT SLIDE	MATE ASSIST LEVER	CPA	MAT SEAL	RING SEAL	BLOCKED TERMINALS CAVITY WITH A NUMBER INDICATES BLOCKED TERMINAL POSITION CAVITY WITHOUT A NUMBER INDICATES OPEN TERMINAL POSITION	STATUS	COMMENTS	INTEGRAL COMPONENTS SOLD SEPARATELY DRESS COVER
MX123 CONN ASSY 18 CKT GRY OPT0 KEY H/12	348510028	C-HSG-H0	G-CAP-0-P	TPA-H0	RS	LS	MAL	CPA	MSEAL	RSEAL	- - - - - 13 12 11 - 9 8 7 - - - - - -	SALEABLE		345750003
MX123 CONN ASSY 18 CKT BLU OPT9 KEY G/10	348510029	C-HSG-G9	G-CAP-9-P	TPA-G9	RS	LS	MAL	CPA	MSEAL	RSEAL	- 17 16 15 - 13 12 - - 9 - - 6 5 - - - -	SALEABLE		345750003
MX123 CONN ASSY 18 CKT GRY OPT0 KEY H/11	348510030	C-HSG-H0	G-CAP-0-P	TPA-H0	RS	LS	MAL	CPA	MSEAL	RSEAL	- - - - - 13 12 11 - 9 8 7 - 5 - - - -	SALEABLE		345750003
MX123 CONN ASSY 18 CKT GRY OPT9 KEY H/11	348510031	C-HSG-H9	G-CAP-9-P	TPA-H9	RS	LS	MAL	CPA	MSEAL	RSEAL	- 17 - - 14 - - 11 10 - - - - - 4 3 2	SALEABLE		345750003
MX123 CONN ASSY 18 CKT GRY OPT0 KEY H/8	348510032	C-HSG-H0	G-CAP-0-P	TPA-H0	RS	LS	MAL	CPA	MSEAL	RSEAL	- - - - - 13 12 - - 9 8 7 6 5 4 3 2	SALEABLE		345750003
MX123 CONN ASSY 18 CKT GRY OPT0 KEY H/10	348510033	C-HSG-H0	G-CAP-0-P	TPA-H0	RS	LS	MAL	CPA	MSEAL	RSEAL	- - - - - 13 12 - - - 8 7 6 - 4 3 2	SALEABLE		345750003
MX123 CONN ASSY 18 CKT GRY OPT0 KEY H/3	348510034	C-HSG-H0	G-CAP-0-P	TPA-H0	RS	LS	MAL	CPA	MSEAL	RSEAL	- 17 16 15 14 13 12 11 10 9 8 7 6 - 4 3 2	SALEABLE		345750003
MX123 CONN ASSY 18 CKT BLU OPT9 KEY G/11	348510035	C-HSG-G9	G-CAP-9-P	TPA-G9	RS	LS	MAL	CPA	MSEAL	RSEAL	- 17 16 15 - - - - - 9 8 7 6 - - - -	SALEABLE		345750003

MX123 18/28/42/49/56-WAY RECEPTACLE ASSY SEALED PIN OUT SHEET

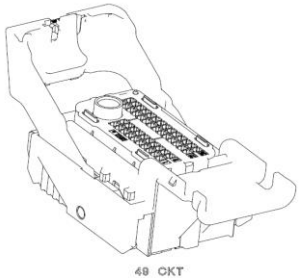

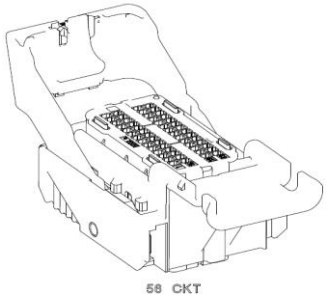

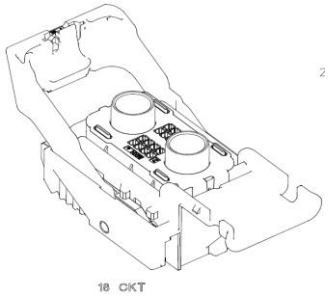

UNCHECKED cavity number(s) are OPEN

56	55	54	53	52	51	50	49	48	47	46	45	44	43
☐	☐	☐	☐	☐	☐	☐	☑	☑	☑	☑	☐	☑	☑
42	**41**	**40**	**39**	**38**	**37**	**36**	**35**	**34**	**33**	**32**	**31**	**30**	**29**
☐	☐	☐	☐	☑	☑	☑	☐	☐	☐	☑	☑	☑	☑
28	**27**	**26**	**25**	**24**	**23**	**22**	**21**	**20**	**19**	**18**	**17**	**16**	**15**
☐	☐	☑	☑	☑	☑	☑	☑	☑	☑	☐	☐	☐	☑
14	**13**	**12**	**11**	**10**	**9**	**8**	**7**	**6**	**5**	**4**	**3**	**2**	**1**
☐	☐	☑	☑	☑	☑	☑	☑	☑	☑	☑	☐	☐	☑

FOR ADDITIONAL INFORMATION SEE SD-34576-001

STATUS	GM PART #	HRNS CONN ASSY			TPA	GROMMET CAP													
		MATERIAL/PART NUMBER	WIRE DRESS OPTION	KEY OPTION Fp	COLOR OPTION Fp	NUMBERS INDICATE CAVITIES OPEN FOR CIRCUITS Fp													
SALEABLE	12672838	34576-0103	0	A	BLACK														
CONCEPT ONLY	12672840	34576-0203	0	B	ST GRY	48	47	46	45	44	43	42	41	40	39	38	37	36	35
SALEABLE	12672842	34576-0303	0	C	BLUE	34	33	32	31	30	29	28	27	26	25	24	23	22	21
CONCEPT ONLY	TBD	34576-0403	0	D	BROWN	49				20	19	18	17	16	15	14	13	12	11
CONCEPT ONLY	TBD	34576-0503	0	E	GREEN					10	9	8	7	6	5	4	3	2	1
CONCEPT ONLY	TBD	34576-0603	0	F	NATURAL														
SALEABLE	12672848	34576-0703	0	G	BLUE														
SALEABLE	12672846	34576-0803	0	H	ST GRY	56	55	54	53	52	51	50	49	48	47	46	45	44	43
TOOL DES. REL.	12672844	34576-0903	0	J	BLACK	42	41	40	39	38	37	36	35	34	33	32	31	30	29
TOOL DES. REL.	TBD	34576-1003	0	K	BROWN	28	27	26	25	24	23	22	21	20	19	18	17	16	15
TOOL DES. REL.	TBD	34576-1103	0	L	GREEN	14	13	12	11	10	9	8	7	6	5	4	3	2	1
TOOL DES. REL.	TBD	34576-1203	0	M	NATURAL														
SALEABLE	12672839	34576-1303	9	A	BLACK														
CONCEPT ONLY	12672841	34576-1403	9	B	ST GRY	48	47	46	45	44	43	42	41	40	39	38	37	36	35
SALEABLE	12672843	34576-1503	9	C	BLUE	34	33	32	31	30	29	28	27	26	25	24	23	22	21
CONCEPT ONLY	TBD	34576-1603	9	D	BROWN	49				20	19	18	17	16	15	14	13	12	11
CONCEPT ONLY	TBD	34576-1703	9	E	GREEN					10	9	8	7	6	5	4	3	2	1
CONCEPT ONLY	TBD	34576-1803	9	F	NATURAL														
SALEABLE	12672849	34576-1903	9	G	BLUE														

MX123 18/28/42/49/56-WAY RECEPTACLE ASSY SEALED PIN OUT SHEET

STATUS	GM PART #	HRNS CONN ASSY			TPA	GROMMET CAP													
		MATERIAL/PART NUMBER	WIRE DRESS OPTION	KEY OPTION Fp	COLOR OPTION Fp	NUMBERS INDICATE CAVITIES OPEN FOR CIRCUITS Fp													
TOOL DES. REL.	12672847	34576-2003	9	H	ST GRY	56	55	54	53	52	51	50	49	48	47	46	45	44	43
TOOL DES. REL.	12672845	34576-2103	9	J	BLACK	42	41	40	39	38	37	36	35	34	33	32	31	30	29
TOOL DES. REL.	TBD	34576-2203	9	K	BROWN	28	27	26	25	24	23	22	21	20	19	18	17	16	15
TOOL DES. REL.	TBD	34576-2303	9	L	GREEN	14	13	12	11	10	9	8	7	6	5	4	3	2	1
TOOL DES. REL.	TBD	34576-2403	9	M	NATURAL														
SALEABLE	12672834	34851-0007	0	G	BLUE														
SALEABLE	12672836	34851-0008	0	H	ST GRY	18					17	16	15	14	1				
											13	12	11	10					
											9	8	7	6					
											5	4	3	2					
SALEABLE	12672835	34851-0019	9	G	BLUE														
SALEABLE	12672837	34851-0020	9	H	ST GRY	18					17	16	15	14	1				
											13	12	11	10					
											9	8	7	6					
											5	4	3	2					
CONCEPT ONLY		160095-0001	0	A	BLACK														
CONCEPT ONLY		160095-0002	0	B	ST GRY	27				26	25	24	23	22	21	1			
CONCEPT ONLY		160095-0003	0	C	BLUE					20	19	18	17	16	15				
						28				14	13	12	11	10	9	2			
										8	7	6	5	4	3				
CONCEPT ONLY		160095-0013	9	A	BLACK														
CONCEPT ONLY		160095-0014	9	B	ST GRY	1				21	22	23	24	25	26	27			
CONCEPT ONLY		160095-0015	9	C	BLUE					15	16	17	18	19	20				
						2				9	10	11	12	13	14	28			
										3	4	5	6	7	8				
CONCEPT ONLY		160051-0001	0	A	BLACK														
CONCEPT ONLY		160051-0003	0	C		1	2	3	4	5	6	7	8	9	10	42			
						11	12	13	14	15	16	17	18	19	20				
						41				21	22	23	24	25	26	27	28	29	30
										31	32	33	34	35	36	37	38	39	40
CONCEPT ONLY		160051-0013	9	A	BLACK														

MX123 18/28/42/49/56-WAY RECEPTACLE ASSY SEALED PIN OUT SHEET

STATUS	GM PART #	HRNS CONN ASSY			TPA	GROMMET CAP													
		MATERIAL/PART NUMBER	WIRE DRESS OPTION	KEY OPTION Fp	COLOR OPTION Fp	NUMBERS INDICATE CAVITIES OPEN FOR CIRCUITS Fp													
CONCEPT ONLY		160051-0015	9	C	BLUE	40	39	38	37	36	35	34	33	32	31	41			
						30	29	28	27	26	25	24	23	22	21				
						42				20	19	18	17	16	15	14	13	12	11
										10	9	8	7	6	5	4	3	2	1
SALEABLE	NOT APPLICABLE	34576-2503	0	G	BLUE	56	55	54	53				49	48	47			44	
								40			37	36	35	34	33				
														20	19	18			
							13	12			9		7	6				2	
SALEABLE	NOT APPLICABLE	34576-2603	0	G	BLUE	56	55	54	53				49	48	47			44	
								40			37	36	35	34	33				
														20	19	18			
							13	12			9		7	6					
SALEABLE	NOT APPLICABLE	34576-2703	0	G	BLUE														
SALEABLE	NOT APPLICABLE	34576-2803	0	G	BLUE		55	54	53		51		49	48	47			44	
								40			37	36	35	34	33				
								26						20	19	18			
							13	12			9		7						
SALEABLE	NOT APPLICABLE	34576-2903	0	G	BLUE	56	55		53				49	48	47	46	45	44	
								40	39		37	36	35	34	33			30	
									25					20	19	18			
							13	12			9		7						
SALEABLE	NOT APPLICABLE	34576-3003	0	G	BLUE	56	55	54	53				49	48	47			44	
								40			37	36	35	34	33				29
														20	19	18		16	15
							13	12			9		7	6				2	
SALEABLE	NOT APPLICABLE	34576-3103	0	G	BLUE	56	55	54	53				49	48	47	46	45	44	
								40	39		37	36	35	34	33				
														20	19	18			
							13	12			9		7						
SALEABLE	NOT APPLICABLE	34576-3203	0	G	BLUE		55	54	53				49	48	47	46		44	
								40			37	36	35	34	33	32	31		
								26						20	19	18			
							13	12			9		7						

MX123 18/28/42/49/56-WAY RECEPTACLE ASSY SEALED PIN OUT SHEET

STATUS	GM PART #	HRNS CONN ASSY			TPA	GROMMET CAP													
		MATERIAL/PART NUMBER	WIRE DRESS OPTION	KEY OPTION Fp	COLOR OPTION Fp	NUMBERS INDICATE CAVITIES OPEN FOR CIRCUITS Fp													
SALEABLE	NOT APPLICABLE	34576-3303	0	G	BLUE	56	55	54					49	48	47			44	
								40			37	36	35	34	33				
														20	19	18			
							13	12			9		7	6					
SALEABLE	NOT APPLICABLE	34576-3403	0	G	BLUE		55	54	53				49	48	47			44	
								40	39		37	36	35	34	33				
								26						20	19	18			
							13	12			9		7						
SALEABLE	NOT APPLICABLE	34576-3503	0	G	BLUE	56	55		53				49	48	47			44	
								40			37	36	35	34	33				
														20	19	18			
							13	12			9		7	6				2	
SALEABLE	NOT APPLICABLE	34576-3603	0	G	BLUE		55	54	53				49	48	47			44	
								40			37	36	35	34	33				
								26						20	19	18			
							13	12			9		7						
SALEABLE	NOT APPLICABLE	34576-3703	0	G	BLUE	56	55	54	53		51		49	48	47			44	
								40			37	36	35	34	33				29
														20	19	18		16	15
							13	12			9		7	6				2	
SALEABLE	NOT APPLICABLE	34576-3803	0	G	BLUE	56		54	53				49		47	46		44	
								40	39		37	36	35		33	32	31		29
									25					20	19	18			15
							13	12			9		7					2	
SALEABLE	NOT APPLICABLE	34576-3903	0	G	BLUE	56		54	53				49		47			44	
								40	39		37	36	35		33				29
									25					20	19	18			15
							13	12			9		7						
SALEABLE	NOT APPLICABLE	34576-4003	0	G	BLUE	56	55	54	53				49	48	47		45	44	
								40	39		37	36	35	34	33				29
									25					20	19	18		16	15
							13	12			9		7	6					1
SALEABLE	NOT APPLICABLE	34576-4103	0	G	BLUE	56	55	54	53				49	48	47	46		44	
								40	39	38	37	36	35	34	33	32	31		29
									25					20	19	18		16	
							13	12			9		7						

MX123 18/28/42/49/56-WAY RECEPTACLE ASSY SEALED PIN OUT SHEET

STATUS	GM PART #	HRNS CONN ASSY			TPA	GROMMET CAP													
		MATERIAL/PART NUMBER	WIRE DRESS OPTION	KEY OPTION Fp	COLOR OPTION Fp	NUMBERS INDICATE CAVITIES OPEN FOR CIRCUITS Fp													
SALEABLE	NOT APPLICABLE	34576-4203	0	G	BLUE	56	55	54	53				49	48	47		45	44	
								40	39		37	36	35	34	33				
														20	19	18			
							13	12			9		7						
SALEABLE	NOT APPLICABLE	34576-4303	0	G	BLUE	56	55	54	53		51		49	48	47		45	44	
							41	40		38	37	36	35	34	33			30	
								26	25	24		22	21	20	19		17		
							13	12			9		7			4	3		1
SALEABLE	NOT APPLICABLE	34576-4403	0	G	BLUE	56	55	54	53				49	48	47	46		44	
								40	39		37	36	35	34	33	32	31		29
									25					20	19	18		16	
								12			9		7						
SALEABLE	NOT APPLICABLE	34576-4503	0	G	BLUE	56	55		53				49	48	47	46		44	
								40	39		37	36	35	34	33	32	31	30	
									25	24		22	21	20	19	18		16	
							13	12			9		7			4		2	1
SALEABLE	NOT APPLICABLE	34576-4603	0	G	BLUE	56	55	54	53				49	48	47	46		44	
								40	39		37	36	35	34	33	32	31		29
									25					20	19	18		16	
							13	12			9		7						
SALEABLE	NOT APPLICABLE	34576-4703	0	G	BLUE	56	55		53		51		49	48	47			44	
								40	39		37	36	35	34	33			30	
									25			22	21	20	19	18		16	15
							13	12			9		7			4		2	1
SALEABLE	NOT APPLICABLE	34576-4803	0	G	BLUE		55		53		51		49	48	47			44	
								40	39		37	36	35	34	33				29
								26						20	19	18		16	15
							13	12			9		7			4		2	
TOOL DES. REL.	NOT APPLICABLE	34576-4903	9	G	BLUE		55	54	53				49	48	47	46		44	
								40			37	36	35	34	33	32	31		
								26						20	19	18			
							13	12			9		7						
SALEABLE	NOT APPLICABLE	34576-5003	0	G	BLUE		55	54	53				49	48	47		45	44	
								40			37	36	35	34	33				
								26						20	19	18			
							13	12			9		7						

MX123 18/28/42/49/56-WAY RECEPTACLE ASSY SEALED PIN OUT SHEET

STATUS	GM PART #	HRNS CONN ASSY			TPA	GROMMET CAP													
		MATERIAL/PART NUMBER	WIRE DRESS OPTION	KEY OPTION Fp	COLOR OPTION Fp	NUMBERS INDICATE CAVITIES OPEN FOR CIRCUITS Fp													
SALEABLE	NOT APPLICABLE	34576-5103	0	G	BLUE		55		53		51		49	48	47			44	
								40			37	36	35	34	33				29
								26		24				20	19	18		16	15
							13	12			9		7			4		2	
SALEABLE	NOT APPLICABLE	34576-5203	0	G	BLUE	56	55	54	53				49	48	47			44	
								40	39		37	36	35	34	33				29
														20	19	18			15
							13	12			9		7						
TOOL DES. REL.	NOT APPLICABLE	34576-5303	9	G	BLUE														
SALEABLE	NOT APPLICABLE	34576-5403	0	G	BLUE		55		53		51		49	48	47			44	
								40	39		37	36	35	34	33			30	
								26	25			22	21	20	19	18		16	
							13	12			9		7			4		2	1
SALEABLE	NOT APPLICABLE	34576-5503	0	G	BLUE	56	55		53		51		49	48	47			44	
								40	39		37	36	35	34	33			30	
									25			22	21	20	19	18		16	
							13	12			9		7			4		2	1
SALEABLE	NOT APPLICABLE	34576-5603	0	G	BLUE	56	55		53				49	48	47	46		44	
								40	39		37	36	35	34	33	32	31	30	
									25			22	21	20	19	18		16	
							13	12			9		7			4		2	1
SALEABLE	NOT APPLICABLE	34576-5703	0	G	BLUE		55		53				49	48	47	46		44	
								40	39		37	36	35	34	33	32	31	30	
								26	25			22	21	20	19	18		16	
							13	12			9		7			4		2	1
SALEABLE	NOT APPLICABLE	34576-5803	0	G	BLUE		55		53				49	48	47	46	45	44	
								40	39		37	36	35	34	33				
								26	25					20	19	18			
							13	12			9		7						
SALEABLE	NOT APPLICABLE	34576-5903	0	G	BLUE	56			53	52					47		45		43
							41	40	39	38				34	33		31	30	29
						28	27	26	25	24				20	19	18		16	
							13	12	11	10							3	2	

MX123 18/28/42/49/56-WAY RECEPTACLE ASSY SEALED PIN OUT SHEET

STATUS	GM PART #	HRNS CONN ASSY			TPA	GROMMET CAP													
		MATERIAL/PART NUMBER	WIRE DRESS OPTION	KEY OPTION Fp	COLOR OPTION Fp	NUMBERS INDICATE CAVITIES OPEN FOR CIRCUITS Fp													
SALEABLE	NOT APPLICABLE	34576-6003	0	G	BLUE	56			53	52		50			47		45		43
								40	39	38				34	33		31	30	29
						28	27	26	25	24				20	19	18		16	
						14	13	12	11	10					5	4	3	2	
SALEABLE	NOT APPLICABLE	34576-6103	0	G	BLUE	56	55	54	53		51		49	48	47			44	
								40	39		37	36	35	34	33				29
														20	19	18		16	15
							13	12			9		7			4		2	
SALEABLE	NOT APPLICABLE	34576-6203	0	G	BLUE		55	54	53				49	48	47	46	45	44	
								40			37	36	35	34	33				
								26						20	19	18			
							13	12			9		7						
SALEABLE	NOT APPLICABLE	34576-6303	0	G	BLUE		55	54	53		51		49	48	47			44	
								40	39		37	36	35	34	33				29
								26						20	19	18		16	15
							13	12			9		7			4		2	
SALEABLE	NOT APPLICABLE	34576-6403	0	G	BLUE		55	54					49	48	47			44	
							41	40			37	36	35	34	33				
														20	19	18			
							13	12			9	8	7				3		
SALEABLE	NOT APPLICABLE	34576-6503	0	G	BLUE			54							47	46	45		43
							41	40	39	38	37				33	32	31	30	29
						28	27	26	25	24	23			20	19	18		16	
							13	12	11	10	9						3	2	
SALEABLE	NOT APPLICABLE	34576-6603	0	G	BLUE			54							47	46	45		43
							41	40	39	38	37			34	33	32	31	30	29
						28	27	26	25	24	23			20	19	18		16	
							13	12	11	10	9						3	2	
SALEABLE	NOT APPLICABLE	34576-6703	0	G	BLUE		55			52	51			48		46	45		43
							41	40	39	38					33	32	31	30	29
						28		26	25	24				20	19	18		16	15
							13	12	11	10							3	2	1
SALEABLE	NOT APPLICABLE	34576-6803	0	G	BLUE					52				48		46	45		43
							41	40	39	38					33	32	31	30	29
						28		26	25	24				20	19	18		16	15
							13	12	11	10							3	2	1

MX123 18/28/42/49/56-WAY RECEPTACLE ASSY SEALED PIN OUT SHEET

STATUS	GM PART #	HRNS CONN ASSY			TPA	GROMMET CAP													
		MATERIAL/PART NUMBER	WIRE DRESS OPTION	KEY OPTION Fp	COLOR OPTION Fp	NUMBERS INDICATE CAVITIES OPEN FOR CIRCUITS Fp													
SALEABLE	NOT APPLICABLE	34576-6813	0	G	BLUE	56	55	54	53		51	50	49		47			44	
						42			39		37	36	35	34					
							27		25		23	22	21				17		
						14			11		9	8	7	6	5	4			
SALEABLE	NOT APPLICABLE	34576-6823	0	G	BLUE	56		54	53			50	49		47			44	
						42			39		37	36	35	34					
							27		25		23	22	21				17		
						14			11		9	8	7	6	5	4			
SALEABLE	NOT APPLICABLE	34576-6833	0	G	BLUE	56		54	53			50	49		47				
													21				17		
						14			11		9	8	7	6	5	4			
SALEABLE	NOT APPLICABLE	34576-6843	0	G	BLUE	56		54	53	52					47	46	45		43
							41	40	39	38	37				33	32	31	30	29
						28	27	26	25	24	23			20	19	18		16	
							13	12	11	10	9						3	2	
SALEABLE	NOT APPLICABLE	34576-6853	0	G	BLUE	56		54	53	52					47	46	45		43
							41	40	39	38	37			34	33	32	31	30	29
						28	27	26	25	24	23			20	19	18		16	
							13	12	11	10	9						3	2	
SALEABLE	NOT APPLICABLE	34576-6863	0	G	BLUE		55			52	51			48		46	45		43
							41	40		38					33	32	31	30	29
						28		26		24				20	19	18		16	15
							13	12		10							3	2	1
SALEABLE	NOT APPLICABLE	34576-6873	0	G	BLUE					52				48		46	45		43
							41	40		38					33	32	31	30	29
						28		26		24				20	19	18		16	15
							13	12		10							3	2	1
SALEABLE	NOT APPLICABLE	34576-6883	0	G	BLUE	56		54		52					47	46	45		43
							41	40	39	38	37			34	33	32	31	30	29
						28	27	26	25	24	23			20	19	18		16	
							13	12	11	10	9						3	2	
SALEABLE	NOT APPLICABLE	34576-6893	0	G	BLUE			54	53						47	46	45		
							41	40		38					33	32	31	30	29
						28	27	26	25	24				20	19	18		16	
							13	12	11	10		8					3	2	

MX123 18/28/42/49/56-WAY RECEPTACLE ASSY SEALED PIN OUT SHEET

STATUS	GM PART #	HRNS CONN ASSY			TPA	GROMMET CAP													
		MATERIAL/PART NUMBER	WIRE DRESS OPTION	KEY OPTION Fp	COLOR OPTION Fp	NUMBERS INDICATE CAVITIES OPEN FOR CIRCUITS Fp													
SALEABLE	NOT APPLICABLE	34576-6913	9	G	BLUE			54	53						47	46	45		43
							41	40		38					33	32	31	30	29
						28	27	26	25	24				20	19	18		16	
							13	12	11	10		8					3	2	
SALEABLE	NOT APPLICABLE	34576-6923	9	G	BLUE			54	53						47	46	45		43
							41	40	39	38					33	32	31	30	29
						28	27	26	25	24	23			20	19	18		16	
							13	12	11	10	9	8					3	2	
TOOL DES. REL.	NOT APPLICABLE	34851-0025	0	G	BLUE	18									1				
TOOL DES. REL.	NOT APPLICABLE	34851-0026	0	H	ST GRY	18									1				
SALEABLE	NOT APPLICABLE	34576-6933	0	G	BLUE		55	54	53				49	48	47	46	45	44	
								40			37	36	35	34	33				
								26						20	19	18			
							13	12			9		7						
SALEABLE	NOT APPLICABLE	34576-6943	0	G	BLUE			54	53						47	46	45		43
							41	40		38					33	32	31	30	29
						28		26	25	24				20	19	18		16	
							13	12	11	10		8					3	2	
SALEABLE	NOT APPLICABLE	34576-6953	0	G	BLUE			54	53						47	46	45		43
							41	40	39	38					33	32	31	30	29
						28	27	26	25	24	23			20	19	18		16	
							13	12	11	10	9	8					3	2	
SALEABLE	NOT APPLICABLE	34576-6963	0	G	BLUE	56		54	53	52					47	46	45		43
							41	40	39	38				34	33	32	31	30	29
						28	27	26	25	24	23			20	19	18		16	
							13	12	11	10	9	8					3	2	
SALEABLE	NOT APPLICABLE	34576-6973	0	G	BLUE	56				52	51	50							43
						42	41		39	38						32	31	30	29
						28	27		25	24	23	22	21				17	16	15
						14			11	10		8		6	5	4	3	2	1

MX123 18/28/42/49/56-WAY RECEPTACLE ASSY SEALED PIN OUT SHEET

STATUS	GM PART #	HRNS CONN ASSY			TPA	GROMMET CAP													
		MATERIAL/PART NUMBER	WIRE DRESS OPTION	KEY OPTION Fp	COLOR OPTION Fp	NUMBERS INDICATE CAVITIES OPEN FOR CIRCUITS Fp													
SALEABLE	NOT APPLICABLE	34576-6983	0	G	BLUE			54	53							46		44	
								40	39	38	37	36				32	31	30	
									25	24	23	22	21	20	19				
									11	10	9	8	7	6	5	4		2	
SALEABLE	NOT APPLICABLE	34576-6993	0	G	BLUE	56	55	54	53	52	51				47	46	45		43
							41	40		38					33	32	31	30	29
						28	27	26	25	24				20	19	18		16	
							13	12	11	10		8					3	2	
SALEABLE	NOT APPLICABLE	34576-7003	0	G	BLUE	56	55	54		52	51				47	46	45		43
							41	40		38					33	32	31	30	29
						28	27	26	25	24				20	19	18		16	
							13	12	11	10		8					3	2	
SALEABLE	NOT APPLICABLE	34576-7013	0	G	BLUE	56	55	54	53	52	51				47	46	45		43
							41	40		38				34	33	32	31	30	29
						28	27	26	25	24				20	19	18		16	
							13		11	10		8					3	2	
SALEABLE	NOT APPLICABLE	34576-7023	0	G	BLUE	56	55	54		52	51				47	46	45		43
							41	40		38				34	33	32	31	30	29
						28	27	26	25	24				20	19	18		16	
							13	12	11	10		8					3	2	
SALEABLE	NOT APPLICABLE	34576-7033	0	G	BLUE	56		54	53	52					47	46	45		43
							41	40		38					33	32	31	30	29
						28	27	26	25	24				20	19	18		16	
							13	12	11	10		8					3	2	
SALEABLE	NOT APPLICABLE	34576-7043	0	G	BLUE	56		54		52					47	46	45		43
							41	40		38					33	32	31	30	29
						28	27	26	25	24				20	19	18		16	
							13	12	11	10		8					3	2	
SALEABLE	NOT APPLICABLE	34576-7053	0	G	BLUE	56		54	53	52					47	46	45		43
							41	40		38				34	33	32	31	30	29
						28	27	26	25	24				20	19	18		16	
							13	12	11	10		8					3	2	
SALEABLE	NOT APPLICABLE	34576-7063	0	G	BLUE	56		54		52					47	46	45		43
							41	40		38				34	33	32	31	30	29
						28	27	26	25	24				20	19	18		16	
							13	12	11	10		8					3	2	

MX123 18/28/42/49/56-WAY RECEPTACLE ASSY SEALED PIN OUT SHEET

STATUS	GM PART #	HRNS CONN ASSY			TPA	GROMMET CAP													
		MATERIAL/PART NUMBER	WIRE DRESS OPTION	KEY OPTION Fp	COLOR OPTION Fp	NUMBERS INDICATE CAVITIES OPEN FOR CIRCUITS Fp													
SALEABLE	NOT APPLICABLE	34576-7073	0	G	BLUE			54	53	52					47	46	45		43
							41	40		38					33	32	31	30	29
						28	27	26	25	24				20	19	18		16	
							13	12	11	10		8					3	2	
SALEABLE	NOT APPLICABLE	34576-7083	0	G	BLUE			54	53	52					47	46	45		43
							41	40		38				34	33	32	31	30	29
						28	27	26	25	24				20	19	18		16	
							13	12	11	10		8					3	2	
SALEABLE	NOT APPLICABLE	34576-7093	0	G	BLUE			54	53						47	46	45		43
							41	40		38					33	32	31	30	29
						28	27	26	25	24				20	19	18		16	
							13	12	11	10		8					3	2	
SALEABLE	NOT APPLICABLE	34576-7103	0	G	BLUE	56	55			52	51	50	49	48	47		45		43
						42	41						35	34	33				29
						28	27	26								18	17	16	15
						14	13	12									3		1
SALEABLE	NOT APPLICABLE	34576-7113	0	G	BLUE			54							47	46	45		43
							41	40		38					33	32	31	30	29
						28	27	26	25	24				20	19	18		16	
							13	12	11	10		8					3	2	
SALEABLE	NOT APPLICABLE	34576-7123	0	G	BLUE	56	55			52	51	50	49	48	47		45		43
						42	41						35	34	33				29
						28	27	26								18		16	15
						14	13	12									3		1
SALEABLE	NOT APPLICABLE	34576-7133	9	G	BLUE	56		54	53	52					47	46	45		43
							41	40	39	38				34	33	32	31	30	29
						28	27	26	25	24	23			20	19	18		16	
							13	12	11	10	9	8					3	2	
SALEABLE	NOT APPLICABLE	34576-7143	9	G	BLUE	56	55	54	53	52	51				47	46	45		43
							41	40		38				34	33	32	31	30	29
						28	27	26	25	24				20	19	18		16	
							13	12	11	10		8					3	2	
SALEABLE	NOT APPLICABLE	34576-7153	9	G	BLUE	56		54	53	52			49		47	46	45		43
							41	40	39	38				34	33	32	31	30	29
						28	27	26	25	24	23			20	19	18		16	
							13	12	11	10	9	8					3	2	

MX123 18/28/42/49/56-WAY RECEPTACLE ASSY SEALED PIN OUT SHEET

STATUS	GM PART #	HRNS CONN ASSY			TPA	GROMMET CAP													
		MATERIAL/PART NUMBER	WIRE DRESS OPTION	KEY OPTION Fp	COLOR OPTION Fp	NUMBERS INDICATE CAVITIES OPEN FOR CIRCUITS Fp													
SALEABLE	NOT APPLICABLE	34576-7163	0	G	BLUE				53				49		47	46	45	44	
								40			37	36	35		33				
								26						20	19	18			
							13	12			9		7						
SALEABLE	NOT APPLICABLE	34576-7173	9	G	BLUE		55			52	51			48		46	45		43
							41	40		38					33	32	31	30	29
						28		26		24				20	19	18		16	15
							13	12		10							3	2	1
SALEABLE	NOT APPLICABLE	34576-7183	0	G	BLUE	56	55		53				49	48	47	46		44	
								40	39		37	36	35	34	33	32	31	30	
									25	24		22	21	20	19	18		16	
							13	12			9		7			4		2	1
SALEABLE	NOT APPLICABLE	34576-7193	9	G	BLUE	56		54	53	52					47	46	45		43
							41	40		38				34	33	32	31	30	29
						28	27	26		24				20	19	18		16	
							13	12		10							3	2	
SALEABLE	NOT APPLICABLE	34576-7203	0	G	BLUE	56	55	54	53	52	51				47	46	45		43
							41	40		38				34	33	32	31	30	29
						28	27	26	25	24				20	19	18		16	
							13	12	11	10		8					3	2	
SALEABLE	NOT APPLICABLE	34576-7213	0	G	BLUE	56	55			52	51	50	49	48	47	46	45		43
						42	41						35	34	33		31		29
						28	27	26					21		19	18		16	15
						14	13	12								4	3		1
SALEABLE	NOT APPLICABLE	34576-7223	0	G	BLUE			54	53						47	46	45		43
							41	40	39	38				34	33		31	30	29
						28	27	26	25	24			21	20	19	18		16	
							13	12	11	10				6			3	2	
SALEABLE	NOT APPLICABLE	34576-7233	0	G	BLUE											46	45		
															33				
													21			18	17		
																	3		
SALEABLE	NOT APPLICABLE	34576-7243	0	G	BLUE			54	53						47		45		43
							41	40	39	38				34	33		31	30	29
						28	27	26	25	24				20	19	18		16	
							13	12	11	10							3	2	

MX123 18/28/42/49/56-WAY RECEPTACLE ASSY SEALED PIN OUT SHEET

STATUS	GM PART #	HRNS CONN ASSY			TPA	GROMMET CAP													
		MATERIAL/PART NUMBER	WIRE DRESS OPTION	KEY OPTION Fp	COLOR OPTION Fp	NUMBERS INDICATE CAVITIES OPEN FOR CIRCUITS Fp													
SALEABLE	NOT APPLICABLE	34851-0027	0	G	BLUE	18									1				
											9		7	6					
											5		3	2					
SALEABLE	NOT APPLICABLE	34851-0028	0	H	ST GRY	18					17	16	15	14	1				
														10					
														6					
											5	4	3	2					
SALEABLE	NOT APPLICABLE	34576-7253	0	G	BLUE	56		54	53	52					47	46	45		43
							41	40	39	38					33	32	31	30	29
						28	27	26	25	24	23			20	19	18		16	
							13	12	11	10	9	8					3	2	
SALEABLE	NOT APPLICABLE	34576-7263	0	G	BLUE	56	55	54	53	52	51	50					45		43
						42	41	40	39				35	34	33				
						28	27									18		16	
						14	13										3	2	
SALEABLE	NOT APPLICABLE	34576-7273	0	G	BLUE	56	55	54	53	52	51	50					45		
						42	41	40	39				35	34	33				
						28	27									18		16	
						14	13										3	2	
SALEABLE	NOT APPLICABLE	34576-7283	0	G	BLUE			54	53						47	46	45		43
							41	40		38				34	33	32	31	30	29
						28	27	26	25	24				20	19	18		16	
							13	12	11	10		8		6			3	2	
SALEABLE	NOT APPLICABLE	34576-7293	9	G	BLUE			54	53				49	48	47	46	45		43
							41	40		38					33	32	31	30	29
						28	27	26	25	24				20	19	18		16	15
							13	12	11	10		8		6			3	2	1
SALEABLE	NOT APPLICABLE	34576-7303	0	G	BLUE	56	55			52	51	50					45		
						42	41						35	34	33				
						28	27									18		16	
						14	13										3		
SALEABLE	NOT APPLICABLE	34576-7313	0	G	BLUE	56	55	54	53	52	51	50					45		
						42	41	40	39				35	34	33				
						28	27				23					18	17	16	
						14	13				9						3	2	

MX123 18/28/42/49/56-WAY RECEPTACLE ASSY SEALED PIN OUT SHEET

STATUS	GM PART #	HRNS CONN ASSY			TPA	GROMMET CAP													
		MATERIAL/PART NUMBER	WIRE DRESS OPTION	KEY OPTION Fp	COLOR OPTION Fp	NUMBERS INDICATE CAVITIES OPEN FOR CIRCUITS Fp													
SALEABLE	NOT APPLICABLE	34576-7323	0	G	BLUE	56	55	54	53	52	51	50					45		
						42	41	40	39				35	34	33				
						28	27				23					18		16	
						14	13				9						3	2	
SALEABLE	NOT APPLICABLE	34576-7333	0	G	BLUE	56	55	54	53	52	51	50					45		
						42	41	40	39				35	34	33				
						28	27									18	17	16	
						14	13										3	2	
SALEABLE	NOT APPLICABLE	34576-7343	0	G	BLUE	56	55			52	51	50				46	45		
						42	41								33				
						28	27						21			18	17	16	
						14	13										3		
SALEABLE	NOT APPLICABLE	34576-7353	0	G	BLUE	56			53	52		50			47	46	45		43
								40		38				34	33	32	31	30	29
						28	27	26	25	24				20	19	18		16	
							13	12	11	10		8					3	2	
SALEABLE	NOT APPLICABLE	34851-0029	9	G	BLUE	18								14	1				
													11	10					
												8	7						
												4	3	2					
SALEABLE	NOT APPLICABLE	34576-7363	0	H	ST. GRAY						51	50		48	47	46	45		
														34	33	32	31		29
													21	20					
											9	8	7	6		4	3	2	1
SALEABLE	NOT APPLICABLE	34576-7373	9	G	BLUE					52				48	47				43
								40			37	36		34				30	
										24				20					15
						14							7						
SALEABLE	NOT APPLICABLE	34851-0030	0	H	ST. GRAY	18					17	16	15	14	1				
														10					
														6					
												4	3	2					
SALEABLE	NOT APPLICABLE	34576-9113	0	A	BLACK														
						49													

MX123 18/28/42/49/56-WAY RECEPTACLE ASSY SEALED PIN OUT SHEET

STATUS	GM PART #	HRNS CONN ASSY			TPA	GROMMET CAP													
		MATERIAL/PART NUMBER	WIRE DRESS OPTION	KEY OPTION Fp	COLOR OPTION Fp	NUMBERS INDICATE CAVITIES OPEN FOR CIRCUITS Fp													
SALEABLE	NOT APPLICABLE	34576-9123	0	C	BLUE														
						49													
SALEABLE	NOT APPLICABLE	34576-7383	9	G	BLUE	56	55	54	53				49	48	47		45	44	
								40	39		37	36	35	34	33				29
									25					20	19	18		16	15
							13	12			9		7	6					1
SALEABLE	NOT APPLICABLE	34576-7393	0	G	BLUE	56	55			52	51	50				46	45	44	
						42	41												
													21		19	18			15
						14	13					8					3		
SALEABLE	NOT APPLICABLE	34576-7403	0	G	BLUE	56	55			52	51	50					45		
						42	41												
						28	27					22				18	17	16	
						14	13					8					3		
SALEABLE	NOT APPLICABLE	34576-7413	0	G	BLUE			54	53				49	48	47	46		44	43
								40	39	38	37	36				32	31	30	29
								26	25	24	23		21	20	19		17		15
								12	11	10	9		7	6	5	4		2	1
SALEABLE	NOT APPLICABLE	34576-7423	0	G	BLUE			54	53				49	48	47	46		44	43
								40	39	38	37	36	35	34	33	32	31	30	29
								26	25	24	23		21	20	19		17		15
								12	11	10	9		7	6	5	4		2	1
SALEABLE	NOT APPLICABLE	34576-7433	0	G	BLUE			54	53				49	48	47	46		44	43
								40	39	38	37	36	35	34	33	32	31	30	29
								26	25	24	23		21	20	19				15
								12	11	10	9		7	6	5	4		2	1
SALEABLE	NOT APPLICABLE	34576-7443	0	G	BLUE			54	53				49	48	47				43
								40	39	38	37	36				32	31	30	29
								26	25	24	23			20			17		15
								12	11	10	9		7	6	5	4		2	1
SALEABLE	NOT APPLICABLE	34576-7453	9	G	BLUE					52				48	47		45		43
								40			37	36		34				30	
										24				20					15
						14							7						

MX123 18/28/42/49/56-WAY RECEPTACLE ASSY SEALED PIN OUT SHEET

STATUS	GM PART #	HRNS CONN ASSY			TPA	GROMMET CAP													
		MATERIAL/PART NUMBER	WIRE DRESS OPTION	KEY OPTION Fp	COLOR OPTION Fp	NUMBERS INDICATE CAVITIES OPEN FOR CIRCUITS Fp													
SALEABLE	NOT APPLICABLE	34576-7463	9	G	BLUE														
															33		31		
										24	23	22	21	20	19	18		16	
										10	9	8	7	6				2	
SALEABLE	NOT APPLICABLE	34576-7473	9	G	BLUE	56	55	54	53		51	50	49			46		44	
						42	41		39	38			35		33	32	31		29
						28	27	26	25		23	22	21		19	18	17	16	
							13	12	11	10	9	8		6	5	4	3	2	1
SALEABLE	NOT APPLICABLE	34576-7483	0	G	BLUE	56	55			52	51	50					45		
						42	41						35	34	33				
						28	27									18		16	
						14	13									4	3		
SALEABLE	NOT APPLICABLE	34576-7493	0	G	BLUE	56	55	54	53	52	51	50					45		
						42	41	40	39										
						28	27									18		16	
						14	13									4	3	2	
SALEABLE	NOT APPLICABLE	34576-7503	0	G	BLUE	56	55			52	51	50					45		
						42	41												
						28	27									18		16	
						14	13									4	3		
SALEABLE	NOT APPLICABLE	34576-7513	0	G	BLUE	56	55	54	53	52	51	50	49	48	47	46	45	44	43
						42	41	40	39	38			35	34	33	32	31	30	29
						28	27	26	25		23	22	21		19	18	17	16	15
						14	13	12	11	10	9	8		6	5	4	3	2	1
SALEABLE	NOT APPLICABLE	34576-7523	9	G	BLUE														
											37	36							
										24				20					
													7						
SALEABLE	NOT APPLICABLE	34576-7533	9	G	BLUE	56		54	53	52			49	48	47	46	45		43
							41	40	39	38				34	33	32	31	30	29
						28	27	26	25	24	23			20	19	18		16	
							13	12	11	10	9	8					3	2	
SALEABLE	NOT APPLICABLE	34576-7543	9	G	BLUE	56		54	53	52				48	47	46	45		43
							41	40	39	38				34	33	32	31	30	29
						28	27	26	25	24	23			20	19	18		16	
							13	12	11	10	9	8					3	2	

MX123 18/28/42/49/56-WAY RECEPTACLE ASSY SEALED PIN OUT SHEET

STATUS	GM PART #	HRNS CONN ASSY			TPA	GROMMET CAP													
		MATERIAL/PART NUMBER	WIRE DRESS OPTION	KEY OPTION Fp	COLOR OPTION Fp	NUMBERS INDICATE CAVITIES OPEN FOR CIRCUITS Fp													
SALEABLE	NOT APPLICABLE	34576-7553	0	A	BLACK	48		46		44	43			40	39	38			35
						34	33	32	31		29			26	25	24	23		21
						49													11
												8	7				3		1
SALEABLE	NOT APPLICABLE	34576-7563	0	C	BLUE	48	47	46	45	44			41	40	39	38	37	36	
						34	33	32		30						24	23		21
						49						18	17	16	15	14	13	12	
										10	9	8	7	6	5		3	2	1
SALEABLE	NOT APPLICABLE	34576-7573	0	G	BLUE					52	51	50					45		43
													35	34	33	32			
						28	27	26								18			15
						14	13	12					7	6			3		1
SALEABLE	NOT APPLICABLE	34576-7583	0	G	BLUE					52	51	50					45		43
																32			
						28	27	26								18			15
						14	13	12					7	6			3		1
SALEABLE	NOT APPLICABLE	34576-7593	0	G	BLUE					52	51	50					45		43
													35	34	33	32			
						28	27	26								18			15
						14	13	12					7	6		4	3		1
SALEABLE	NOT APPLICABLE	34576-7603	0	G	BLUE	56	55			52	51	50					45	44	43
						42	41				37	36	35	34	33	32		30	
						28	27	26		24		22		20	19			16	15
						14	13	12		10		8	7	6					1
SALEABLE	NOT APPLICABLE	34576-7613	9	C	BLUE	48	47		45	44			41	40	39	38	37	36	
						34	33	32		30						24	23		21
						49						18	17	16	15	14	13	12	
										10	9	8	7	6	5		3	2	1
SALEABLE	NOT APPLICABLE	34576-7623	9	A	BLACK	48		46		44	43	42		40	39	38			35
						34	33	32	31		29	28		26	25	24	23		21
						49													11
												8	7				3		1
SALEABLE	NOT APPLICABLE	34576-7633	0	A	BLACK	48	47	46	45	44			41	40	39	38	37	36	
						34	33	32		30						24	23		21
						49						18	17	16	15	14	13	12	
										10	9	8	7	6	5		3	2	1

MX123 18/28/42/49/56-WAY RECEPTACLE ASSY SEALED PIN OUT SHEET

STATUS	GM PART #	HRNS CONN ASSY			TPA	GROMMET CAP													
		MATERIAL/PART NUMBER	WIRE DRESS OPTION	KEY OPTION Fp	COLOR OPTION Fp	NUMBERS INDICATE CAVITIES OPEN FOR CIRCUITS Fp													
SALEABLE	NOT APPLICABLE	34576-7643	0	G	BLUE														
						42	41											30	29
						28		26			23			20			17		15
						14					9								1
SALEABLE	NOT APPLICABLE	34576-7653	0	C	BLUE	48	47	46	45					40		38	37	36	
						34		32	31		29				25	24	23	22	
						49				20	19	18	17	16				12	
										10	9				5			2	1
SALEABLE	NOT APPLICABLE	34576-7663	9	A	BLACK	48	47	46	45					40		38	37	36	
						34		32	31		29				25	24	23	22	
						49				20	19	18	17	16				12	
										10	9				5			2	1
SALEABLE	NOT APPLICABLE	34576-7673	0	C	BLUE	48	47	46	45	44			41	40	39	38	37	36	
						34	33	32		30		28	27			24	23		21
						49						18	17		15	14	13	12	
										10	9	8	7	6	5		3	2	1
SALEABLE	NOT APPLICABLE	34576-7683	0	A	BLACK	48		46		44	43	42			39	38			35
						34		32	31		29	28			25	24	23		21
						49				20	19					14			11
										10	9	8	7				3		1
SALEABLE	NOT APPLICABLE	34576-7693	0	G	BLUE					52	51	50				46	45		43
																32			
						28	27	26								18			15
						14	13	12					7	6			3		1
SALEABLE	NOT APPLICABLE	34576-7703	0	G	BLUE					52	51	50				46	45		43
													35	34	33	32			
						28	27	26								18			15
						14	13	12					7	6			3		1
SALEABLE	NOT APPLICABLE	34576-7713	0	G	BLUE					52	51	50				46	45		43
													35	34	33	32			
						28	27	26								18			15
						14	13	12					7	6		4	3		1
SALEABLE	NOT APPLICABLE	34576-7723	9	C	BLUE	48	47	46	45	44			41	40	39	38	37	36	
						34	33	32		30						24	23		21
						49						18	17	16	15	14	13	12	
										10	9	8	7	6	5		3	2	1

MX123 18/28/42/49/56-WAY RECEPTACLE ASSY SEALED PIN OUT SHEET

STATUS	GM PART #	HRNS CONN ASSY			TPA	GROMMET CAP													
		MATERIAL/PART NUMBER	WIRE DRESS OPTION	KEY OPTION Fp	COLOR OPTION Fp	NUMBERS INDICATE CAVITIES OPEN FOR CIRCUITS Fp													
SALEABLE	NOT APPLICABLE	34576-7733	0	A	BLACK					44	43	42	41		39				35
							33			30		28	27	26					21
						49						18			15	14	13		11
												8	7	6		4	3		1
SALEABLE	NOT APPLICABLE	34576-7743	0	C	BLUE						43								
									31		29			26	25			22	
						49				20	19								11
																4		2	
SALEABLE	NOT APPLICABLE	34576-7753	0	G	BLUE					52	51	50				46	45		
															33				
						28	27						21			18	17		
						14	13										3		
SALEABLE	NOT APPLICABLE	34576-7763	9	A	BLACK					44	43	42	41		39				35
							33			30		28	27	26					21
						49						18	17			14	13		11
												8	7	6		4	3		
SALEABLE	NOT APPLICABLE	34576-7773	9	A	BLACK	48	47	46	45	44	43			40		38	37	36	
						34		32	31		29	28	27		25	24	23	22	
						49				20	19			16	15			12	
										10	9				5			2	1
SALEABLE	NOT APPLICABLE	34851-0031	9	H	ST. GRAY	18						16	15		1				
											13	12							
											9	8	7	6					
											5								
SALEABLE	NOT APPLICABLE	34576-7783	9	C	BLUE	48	47	46	45	44			41	40	39	38	37	36	
						34	33	32		30			27			24	23		21
						49						18	17		15	14	13	12	
										10	9	8	7	6	5		3	2	1
SALEABLE	NOT APPLICABLE	34576-7793	9	A	BLACK	48	47	46	45					40		38	37	36	
						34		32	31						25	24	23	22	
						49				20	19	18	17	16	15			12	
										10	9				5			2	1
SALEABLE	NOT APPLICABLE	34576-7803	0	G	BLUE			54	53				49	48	47			44	43
								40	39	38	37	36	35	34		32	31	30	29
								26	25	24	23	22		20	19				15
								12	11	10	9	8	7	6	5	4		2	1

MX123 18/28/42/49/56-WAY RECEPTACLE ASSY SEALED PIN OUT SHEET

STATUS	GM PART #	HRNS CONN ASSY			TPA	GROMMET CAP													
		MATERIAL/PART NUMBER	WIRE DRESS OPTION	KEY OPTION Fp	COLOR OPTION Fp	NUMBERS INDICATE CAVITIES OPEN FOR CIRCUITS Fp													
SALEABLE	NOT APPLICABLE	34576-7813	9	C	BLUE	48	47	46	45	44			41	40	39	38	37	36	
						34	33	32		30			27			24	23		21
						49						18	17		15	14	13	12	
										10	9	8	7		5		3	2	1
SALEABLE	NOT APPLICABLE	34576-7823	0	A	BLACK	48	47	46	45					40		38	37	36	
						34		32	31		29				25	24	23	22	
						49				20	19		17	16				12	
										10	9				5			2	
SALEABLE	NOT APPLICABLE	34576-7833	0	C	BLUE	48	47		45	44			41	40	39	38	37	36	35
						34		32		30		28				24			21
						49						18	17		15	14	13	12	11
											9		7	6	5		3		1
SALEABLE	NOT APPLICABLE	34576-7843	9	A	BLACK	48	47	46	45	44	43			40		38	37	36	
						34		32	31			28	27		25	24	23	22	
						49				20	19	18	17	16	15			12	
										10	9			6	5			2	1
SALEABLE	NOT APPLICABLE	34576-7853	0	C	BLUE	48	47	46	45	44		42	41	40	39	38	37	36	35
						34	33	32		30	29	28	27			24	23		21
						49				20		18	17	16	15	14	13	12	
										10	9	8	7	6	5		3		1
SALEABLE	NOT APPLICABLE	34576-7863	9	A	BLACK	48		46			43				39	38		36	35
						34	33		31		29		27		25	24	23		21
						49				20	19								11
										10	9		7	6					1
SALEABLE	NOT APPLICABLE	34576-7873	9	C	BLUE	48	47	46	45	44	43		41	40	39	38	37	36	
						34	33	32		30			27			24	23		21
						49						18	17		15	14	13	12	
											9	8	7	6	5		3		1
SALEABLE	NOT APPLICABLE	34576-7883	9	A	BLACK	48	47	46	45	44	43			40			37	36	
						34		32	31		29		27		25	24	23	22	
						49				20	19	18		16				12	
										10	9			6	5			2	1
SALEABLE	NOT APPLICABLE	34576-7893	9	A	BLACK	48	47	46	45					40		38	37	36	
						34		32	31		29				25	24	23	22	
						49				20	19		17	16					
										10	9				5			2	

MX123 18/28/42/49/56-WAY RECEPTACLE ASSY SEALED PIN OUT SHEET

STATUS	GM PART #	HRNS CONN ASSY			TPA	GROMMET CAP													
		MATERIAL/PART NUMBER	WIRE DRESS OPTION	KEY OPTION Fp	COLOR OPTION Fp	NUMBERS INDICATE CAVITIES OPEN FOR CIRCUITS Fp													
SALEABLE	NOT APPLICABLE	34576-7903	0	A	BLACK	48	47	46	45					40		38	37	36	
						34		32	31		29				25	24	23	22	
						49				20	19		17	16				12	
										10	9				5			2	1
SALEABLE	NOT APPLICABLE	34576-7913	9	A	BLACK	48		46			43				39	38		36	35
						34	33	32	31		29		27		25	24	23	22	21
						49				20	19								11
										10	9		7	6					1
SALEABLE	NOT APPLICABLE	34576-7923	0	A	BLACK	48	47	46	45	44	43			40		38	37	36	
						34		32	31		29	28	27		25	24	23	22	
						49				20	19	18	17	16	15			12	
										10	9			6	5			2	1
SALEABLE	NOT APPLICABLE	34576-7933	0	C	BLUE														
						49				20		18	17	16		14	13	12	
											9	8	7	6			3		1
SALEABLE	NOT APPLICABLE	34576-7943	0	A	BLACK	48	47	46	45					40		38	37	36	
						34		32	31		29				25	24	23	22	
						49				20	19			16	15			12	
										10	9				5			2	1
SALEABLE	NOT APPLICABLE	34576-7953	0	G	BLUE					52	51	50				46	45		
															33				
						28	27	26					21			18	17		
						14	13	12									3		
SALEABLE	NOT APPLICABLE	34576-7963	9	A	BLACK	48		46			43				39	38		36	35
						34	33	32	31		29		27		25	24	23		21
						49				20	19								11
										10	9		7	6					1
SALEABLE	NOT APPLICABLE	34576-7973	0	A	BLACK	48	47	46	45	44	43			40		38	37	36	
						34		32	31			28	27		25	24	23	22	
						49				20	19			16	15			12	
										10	9				5			2	1
SALEABLE	NOT APPLICABLE	34576-7983	9	A	BLACK											38			
							33	32			29	28		26	25		23		
						49				20		18		16	15				
										10		8	7	6	5				

MX123 18/28/42/49/56-WAY RECEPTACLE ASSY SEALED PIN OUT SHEET

STATUS	GM PART #	HRNS CONN ASSY			TPA	GROMMET CAP													
		MATERIAL/PART NUMBER	WIRE DRESS OPTION	KEY OPTION Fp	COLOR OPTION Fp	NUMBERS INDICATE CAVITIES OPEN FOR CIRCUITS Fp													
SALEABLE	NOT APPLICABLE	34576-7993	9	C	BLUE		47		45	44		42		40	39	38	37	36	
						34		32		30		28				24	23		21
						49						18	17		15	14	13	12	11
											9		7		5		3		1
SALEABLE	NOT APPLICABLE	34576-8003	0	A	BLACK	48	47	46	45	44	43			40		38	37	36	
						34		32	31		29	28	27		25	24	23	22	
						49				20	19			16				12	
										10	9			6	5			2	1
SALEABLE	NOT APPLICABLE	34576-8013	0	H	ST GRY			54	53	52	51					46	45	44	43
								40	39	38	37	36	35	34	33				
								26	25										
						14	13	12	11			8	7	6	5			2	1
SALEABLE	NOT APPLICABLE	34576-8023	9	A	BLACK	48	47	46	45					40			37	36	
						34		32	31		29				25	24	23	22	
						49				20	19	18		16				12	
										10	9				5			2	1
SALEABLE	NOT APPLICABLE	34576-8033	9	A	BLACK											38			
							33	32			29	28		26	25		23		
						49				20		18	17	16	15				
										10		8	7	6	5	4		2	
SALEABLE	NOT APPLICABLE	34576-8043	9	C	BLUE		47		45	44				40	39	38	37	36	
						34		32		30		28				24	23		21
						49						18	17		15	14	13	12	11
											9		7		5		3		1
SALEABLE	NOT APPLICABLE	34576-8053	0	A	BLACK	48	47	46	45	44	43			40		38	37	36	
						34		32	31		29	28	27		25	24	23	22	
						49				20	19			16				12	
										10	9				5			2	1
SALEABLE	NOT APPLICABLE	34576-8063	9	A	BLACK	48	47	46	45	44	43			40			37	36	
						34		32	31		29	28	27		25	24	23	22	
						49				20	19	18		16	15			12	
										10	9				5		3	2	1
SALEABLE	NOT APPLICABLE	34576-8073	0	C	BLUE	48	47	46	45	44			41	40	39	38	37	36	
						34	33	32		30		28				24	23	22	21
						49				20		18	17	16		14	13	12	
											9	8	7	6			3		1

MX123 18/28/42/49/56-WAY RECEPTACLE ASSY SEALED PIN OUT SHEET

STATUS	GM PART #	HRNS CONN ASSY			TPA	GROMMET CAP													
		MATERIAL/PART NUMBER	WIRE DRESS OPTION	KEY OPTION Fp	COLOR OPTION Fp	NUMBERS INDICATE CAVITIES OPEN FOR CIRCUITS Fp													
SALEABLE	NOT APPLICABLE	34576-8083	0	H	ST GRY	56	55	54	53	52	51					46	45	44	43
						42	41	40	39	38	37	36	35	34	33				
						28	27	26	25	24	23	22	21	20	19				
						14	13	12	11			8	7	6	5			2	1
SALEABLE	NOT APPLICABLE	34576-8093	0	H	ST GRY			54	53	52	51					46	45	44	43
								40	39	38	37	36	35	34	33				
						28	27	26	25	24	23								
						14	13	12	11			8	7	6	5			2	1
SALEABLE	NOT APPLICABLE	34576-8103	0	H	ST GRY			54	53	52	51								
								40	39	38	37	36	35	34	33				
						28	27	26	25	24	23								
						14	13	12	11									2	1
SALEABLE	NOT APPLICABLE	34576-8113	0	A	BLACK	48	47	46	45	44	43			40		38	37	36	
						34		32	31		29	28	27		25	24	23	22	
						49				20	19	18	17	16	15			12	
										10	9				5			2	1
SALEABLE	NOT APPLICABLE	34576-8123	0	A	BLACK	48	47	46	45	44	43			40		38	37	36	
						34		32	31			28	27		25	24	23	22	
						49				20	19		17	16	15			12	
										10	9				5			2	1
SALEABLE	NOT APPLICABLE	34576-8133	0	A	BLACK	48		46		44	43	42		40	39	38			35
						34	33	32	31		29	28		26	25	24	23		21
						49										14			11
												8	7				3		1
SALEABLE	NOT APPLICABLE	34576-8143	0	G	BLUE	56	55	54	53	52	51	50	49	48	47	46	45	44	43
								40				36	35				31		
							27		25	24		22	21		19	18			
							13	12		10	9	8	7	6			3		
SALEABLE	NOT APPLICABLE	34576-9133	9	A	BLACK	48	47	46	45	44	43			40		38	37	36	
						34		32	31		29	28	27		25	24	23	22	
						49				20	19	18	17	16				12	
										10	9				5			2	1
SALEABLE	NOT APPLICABLE	34576-9143	9	C	BLUE		47		45	44				40	39	38	37	36	
						34		32		30				26	25	24	23		21
						49						18	17		15	14	13	12	
										10	9		7	6	5		3		1

MX123 18/28/42/49/56-WAY RECEPTACLE ASSY SEALED PIN OUT SHEET

STATUS	GM PART #	HRNS CONN ASSY			TPA	GROMMET CAP													
		MATERIAL/PART NUMBER	WIRE DRESS OPTION	KEY OPTION Fp	COLOR OPTION Fp	NUMBERS INDICATE CAVITIES OPEN FOR CIRCUITS Fp													
SALEABLE	NOT APPLICABLE	34576-9153	9	A	BLACK					44	43		41				37	36	
						34	33	32										22	
						49						18	17	16	15				
												8	7	6	5				

INDEX

PAGE TITLE	PAGE
TITLE BLOCK	1
PART BLOCK	2
KPC BLOCK	3
COMPONENT TABLE	4
NOTES	5
NOTES	6
WIRE DRESS PACKAGING DIMENSIONS	7
LOCATION AND PACKAGING DIMENSIONS REFERENCING INTERFACE DATUMS B & C	8
LOCATION AND PACKAGING DIMENSIONS REFERENCING INTERFACE DATUM A	9
KEY ID REF - WIRE DRESS OPTION 0	10
KEY ID REF - WIRE DRESS OPTION 9	11
CIRCUIT CONFIGURATIONS	12
CIRCUIT CONFIGURATIONS	13
COMPONENT CONNECTOR INTERFACE	14
COMPONENT CONNECTOR INTERFACE	15
COMPONENT CONNECTOR INTERFACE	16
COMPONENT CONNECTOR INTERFACE	17
COMPONENT CONNECTOR INTERFACE	18
COMPONENT CONNECTOR INTERFACE	19
COMPONENT CONNECTOR INTERFACE	20
COMPONENT CONNECTOR INTERFACE	21
ADDITIONAL COMPONENTS REQUIRED	22

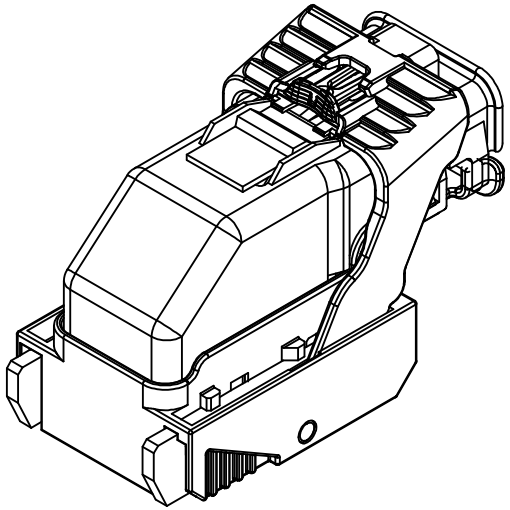

MX123 HARNESS CONN - SEALED
18/49/56 CKTS

ENTER DESCRIPTION
EC NO: UAU2017-0870 2017/03/27
DRWN:ACHITALIA 2017/03/29
CHKD:
APPR:VKOSHY
DESCRIPTION
REV

A4

QUALITY SYMBOLS
=0
=0
=0

GENERAL TOLERANCES (UNLESS SPECIFIED)

	mm	INCH
4 PLACES	± ---	± ---
3 PLACES	± ---	± ---
2 PLACES	± 0.13	± ---
1 PLACE	± 0.25	± ---
0 PLACE	± ---	± ---

ANGULAR ± 1 °

DRAFT WHERE APPLICABLE MUST REMAIN WITHIN DIMENSIONS

DIMENSION STYLE: MM ONLY

DRAWN BY	SKRAJENDRANA	DATE 2016/12/15
CHECKED BY	VKOSHY	DATE 2016/12/15
APPROVED BY	VKOSHY	DATE 2017/03/03

MATERIAL NO.: SEE BOM TABLE

SIZE: D

SCALE: 1:1

DESIGN UNITS: METRIC

THIRD ANGLE PROJECTION

TITLE: ICD - MX123 18/49/56CKT INTERFACE CONNECTION DRW MOLEX

molex

DOCUMENT NO.: SD-34576-0001

SHEET NO.: 1 OF 22

THIS DRAWING CONTAINS INFORMATION THAT IS PROPRIETARY TO MOLEX INCORPORATED AND SHOULD NOT BE USED WITHOUT WRITTEN PERMISSION

22	RD	A	C	001			0.000	YAZAKI: 7158-3114-90	2.8MM CAVITY PLUG
21	RD	A		001			0.000	PLUG-WRG HARN CONN MX0.64	
20	RD	A		001			0.000	TERM-AG 0.5MM/0.75MM ISO,MX64	
19	RD	A		001			0.000	TERM-AG 0.35MM ISO,MX64	
18	RD	A	C	006			0.009	WIRE HARNESS COVER	18/49/56 WAY
17	RD	A	2	001			0.041	HARN CONN ASM 56 CKT	KEY J OPTION 9
16	RD	A	2	001			0.041	HARN CONN ASM 56 CKT	KEY H OPTION 9
15	RD	A	2	001			0.041	HARN CONN ASM 56 CKT	KEY G OPTION 9
14	RD	A	2	001			0.041	HARN CONN ASM 56 CKT	KEY J OPTION 0
13	RD	A	2	001			0.041	HARN CONN ASM 56 CKT	KEY H OPTION 0
12	RD	A	2	001			0.041	HARN CONN ASM 56 CKT	KEY G OPTION 0
11	RD	A	2	001			0.040	HARN CONN ASM 49 CKT	KEY C OPTION 9
10	RD	A	2	001			0.040	HARN CONN ASM 49 CKT	KEY B OPTION 9
09	RD	A	2	001			0.040	HARN CONN ASM 49 CKT	KEY A OPTION 9
08	RD	A	2	001			0.040	HARN CONN ASM 49 CKT	KEY C OPTION 0
07	RD	A	2	001			0.040	HARN CONN ASM 49 CKT	KEY B OPTION 0
06	RD	A	2	001			0.040	HARN CONN ASM 49 CKT	KEY A OPTION 0
05	RD	A	2	001			0.044	HARN CONN ASM 18 CKT	KEY H OPTION 9
04	RD	A	2	001			0.044	HARN CONN ASM 18 CKT	KEY G OPTION 9
03	RD	A	2	001			0.044	HARN CONN ASM 18 CKT	KEY H OPTION 0
02	RD	A	2	001			0.044	HARN CONN ASM 18 CKT	KEY G OPTION 0
01	RD	A		001			1.285	HARNESS CONN ASM-SEALED 18/49/56CKTS,MX123	
								DRAWING	
DWG ITM	DWG RLTN SHIP	D L S	ST	REV	P D I		MASS (KG)	PART NAME	NOTES

PARTS SHOWN ON DRAWING

ENTER DESCRIPTION
EC NO: UAU2017-0870 2017/03/27
DRWN:ACHITALIA 2017/03/29
CHKD:
APPR: VKOSHY
DESCRIPTION
A4
REV

QUALITY SYMBOLS
=0
=0
=0

GENERAL TOLERANCES (UNLESS SPECIFIED)

	mm	INCH
4 PLACES	± ---	± ---
3 PLACES	± ---	± ---
2 PLACES	± 0.13	± ---
1 PLACE	± 0.25	± ---
0 PLACE	± ---	± ---

ANGULAR ± 1 °
DRAFT WHERE APPLICABLE MUST REMAIN WITHIN DIMENSIONS

DIMENSION STYLE: MM ONLY
SCALE: 1:1
DESIGN UNITS: METRIC
THIRD ANGLE PROJECTION

DRAWN BY: SKRAJENDRANA DATE: 2016/12/15
CHECKED BY: VKOSHY DATE: 2016/12/15
APPROVED BY: VKOSHY DATE: 2017/03/03
MATERIAL NO.: SEE BOM TABLE
SIZE: D

TITLE: ICD - MX123 18/49/56CKT INTERFACE CONNECTION DRW MOLEX

molex

DOCUMENT NO.: SD-34576-0001
SHEET NO.: 2 OF 22

THIS DRAWING CONTAINS INFORMATION THAT IS PROPRIETARY TO MOLEX INCORPORATED AND SHOULD NOT BE USED WITHOUT WRITTEN PERMISSION

KEY PRODUCT CHARACTERISTICS
(IN ACCORDANCE WITH QN 1805 OR QN 1050)

▽ SAFETY/COMPLIANCE

◇ FIT/FUNCTION

TOTAL ON DRAWING	4
LAST NO. USED	4

NO	TYPE	DESCRIPTION	RATIONALE	PAGE/ZONE
1	F/F	32.68	IMPROVE CONNECTOR SYSTEM MATING	15
2	F/F	29.00	INSURE PROPER RELEASE OF LEVER	15
3	F/F	15.25	INSURE FINAL MATE POSITION	16
4	F/F	POSITIONAL TOLERANCE (2 PLACES)	INSURE CONNECTOR SYSTEM MATIBILITY	19

ENTER DESCRIPTION
EC NO: UAU2017-0870 2017/03/27
DRWN:ACHITALIA
CHKD:
APPR:VKOSHY 2017/03/29
DESCRIPTION
REV
A4

QUALITY SYMBOLS
▽=0
▽=0
▽=0

GENERAL TOLERANCES (UNLESS SPECIFIED)

	mm	INCH
4 PLACES	± ---	± ---
3 PLACES	± ---	± ---
2 PLACES	± 0.13	± ---
1 PLACE	± 0.25	± ---
0 PLACE	± ---	± ---

ANGULAR ± 1 °

DRAFT WHERE APPLICABLE MUST REMAIN WITHIN DIMENSIONS

DIMENSION STYLE: MM ONLY
SCALE: 1:1
DESIGN UNITS: METRIC
THIRD ANGLE PROJECTION

		DATE
DRAWN BY	SKRAJENDRANA	2016/12/15
CHECKED BY	VKOSHY	2016/12/15
APPROVED BY	VKOSHY	2017/03/03

TITLE: ICD - MX123 18/49/56CKT INTERFACE CONNECTION DRW MOLEX

molex

MATERIAL NO.: SEE BOM TABLE
DOCUMENT NO.: SD-34576-0001
SHEET NO.: 3 OF 22
SIZE: D

THIS DRAWING CONTAINS INFORMATION THAT IS PROPRIETARY TO MOLEX INCORPORATED AND SHOULD NOT BE USED WITHOUT WRITTEN PERMISSION

Line	MFG.	MFG. P/N	APPLICABLE COMPONENTS DESCRIPTION	Key Option	Wire Dress Option	Key Config.	Color	Status
1	MOLEX	34575-0003	WIRE HARNESS COVER*	N/A	NA	N/A	BLACK	AVAILABLE
2	MOLEX	34851-0007	HARN CONN ASM 18 CKT	G	0	1358	BLUE	ACTIVE
3	MOLEX	34851-0008	HARN CONN ASM 18 CKT	H	0	2458	ST GRAY	ACTIVE
4	MOLEX	34851-0019	HARN CONN ASM 18 CKT	G	9	1358	BLUE	ACTIVE
5	MOLEX	34851-0020	HARN CONN ASM 18 CKT	H	9	2458	ST GRAY	ACTIVE
6	MOLEX	34576-0103	HARN CONN ASM 49 CKT	A	0	1458	BLACK	ACTIVE
7	MOLEX	34576-0203	HARN CONN ASM 49 CKT	B	0	1468	ST GRAY	NOT ACTIVE
8	MOLEX	34576-0303	HARN CONN ASM 49 CKT	C	0	2467	BLUE	ACTIVE
9	MOLEX	34576-1303	HARN CONN ASM 49 CKT	A	9	1458	BLACK	ACTIVE
10	MOLEX	34576-1403	HARN CONN ASM 49 CKT	B	9	1468	ST GRAY	NOT ACTIVE
11	MOLEX	34576-1503	HARN CONN ASM 49 CKT	C	9	2467	BLUE	ACTIVE
12	MOLEX	34576-0703	HARN CONN ASM 56 CKT	G	0	1358	BLUE	AVAILABLE
13	MOLEX	34576-0803	HARN CONN ASM 56 CKT	H	0	2458	ST GRAY	AVAILABLE
14	MOLEX	34576-0903	HARN CONN ASM 56 CKT	J	0	2457	BLACK	NOT ACTIVE
15	MOLEX	34576-1903	HARN CONN ASM 56 CKT	G	9	1358	BLUE	AVAILABLE
16	MOLEX	34576-2003	HARN CONN ASM 56 CKT	H	9	2458	ST GRAY	NOT ACTIVE
17	MOLEX	34576-2103	HARN CONN ASM 56 CKT	J	9	2457	BLACK	NOT ACTIVE
18	MOLEX	34736-0028	MX64 RCPT TERM Ag 0.5mm/0.75mm ISO GAGE B (RIGHT PAYOFF)	N/A	N/A	N/A	N/A	AVAILABLE
19	MOLEX	34736-0026	MX64 RCPT TERM Ag 0.35mm ISO B (RIGHT PAYOFF)	N/A	N/A	N/A	N/A	AVAILABLE
20	MOLEX	34586-0001	MX123 0.64MM GROMMET PLUG	N/A	N/A	N/A	NATURAL	AVAILABLE
21	YAZAKI	7116-4150-02	2.8mm YESC SEALED FEMALE TERMINAL TIN 0.35mm2-0.50mm2	N/A	N/A	N/A	N/A	NOT ACTIVE
22	YAZAKI	7116-4151-02	2.8mm YESC SEALED FEMALE TERMINAL TIN 0.75mm2-1.0mm2	N/A	N/A	N/A	N/A	NOT ACTIVE
23	YAZAKI	7116-4152-02	2.8mm YESC SEALED FEMALE TERMINAL TIN 1.5mm2-2.5mm2	N/A	N/A	N/A	N/A	AVAILABLE
24	YAZAKI	7158-3111-60	2.8mm CABLE SEAL (wire O.D. range 1.2mm-1.9mm)	N/A	N/A	N/A	GREEN	NOT ACTIVE
25	YAZAKI	7158-3112-70	2.8mm CABLE SEAL (wire O.D. range 1.8mm-2.3mm)	N/A	N/A	N/A	YELLOW	NOT ACTIVE
26	YAZAKI	7158-3113-40	2.8mm CABLE SEAL (wire O.D. range 2.1mm-3.0mm)	N/A	N/A	N/A	WHITE	AVAILABLE
27	YAZAKI	7158-3114-90	2.8mm YESC CAVITY PLUG	N/A	N/A	N/A	BLUE	AVAILABLE
28	DELPHI	33140138	6.35mm APEX RCPT TERM Sn/Ag GRIP CODE-10 (6mm2) - GREASED	N/A	N/A	N/A	N/A	AVAILABLE
29	DELPHI	33140135	6.35mm APEX RCPT TERM Sn/Ag GRIP CODE-TBD (1mm2) - GREASED	N/A	N/A	N/A	N/A	AVAILABLE
30	QSR	A-0549C	6.35mm CABLE SEAL (FOR 6.0mm2 WIRE SIZE - 3.6 TO 4.2mm INSULATION OD)	N/A	N/A	N/A	WHITE	AVAILABLE
31	QSR	A-0549B	6.35mm CABLE SEAL (FOR 0.75-1.25mm2 WIRE SIZE - 1.8 TO 2.3mm INSULATION OD)	N/A	N/A	N/A	BLUE	AVAILABLE
32	MOLEX	63825-8400	MX64 TERM HAND CRIMP TOOL	N/A	N/A	N/A	N/A	AVAILABLE
33	MOLEX	63813-1400	MX64 TERM SERVICE TOOL	N/A	N/A	N/A	N/A	AVAILABLE
34	MOLEX	63902-5300	MX64 CRIMP APPLICATOR with TOOL KIT 0.5/0.75mm2 PAYOFF DIRECTION D (left payoff) (contact Molex for payoff detail)	N/A	N/A	N/A	N/A	AVAILABLE
35	MOLEX	63902-5370	MX64 APPLICATOR TOOL KIT 0.5/0.75mm2	N/A	N/A	N/A	N/A	AVAILABLE
36	MOLEX	63902-5100	MX64 CRIMP APPLICATOR with TOOL KIT 0.35mm2 PAYOFF DIRECTION D (left payoff) (contact Molex for payoff detail)	N/A	N/A	N/A	N/A	AVAILABLE
37	MOLEX	63902-5170	MX64 APPLICATOR TOOL KIT 0.35mm2	N/A	N/A	N/A	N/A	AVAILABLE
38	SPX	J35616-64	0.64mm PROBE TOOL (for rcpt)	N/A	N/A	N/A	N/A	AVAILABLE
39	SPX	J35616-64A	0.64mm PROBE TOOL WITH EXT (for rcpt)	N/A	N/A	N/A	N/A	AVAILABLE
40	SPX	J35616-65	0.64mm PROBE TOOL WITH EXT (for pin)	N/A	N/A	N/A	N/A	AVAILABLE
41	SPX	J35616-4A	2.8mm PROBE TOOL (for rcpt)	N/A	N/A	N/A	N/A	AVAILABLE
42	YAZAKI	X39899-J374	2.8mm TERM SERVICE TOOL	N/A	N/A	N/A	N/A	AVAILABLE
43	TQI	7000-1001	18CKT PASS THROUGH ADAPTERS	N/A	N/A	N/A	BLACK	AVAILABLE
44	TQI	7000-1004	49CKT PASS THROUGH ADAPTERS	N/A	N/A	N/A	BLACK	AVAILABLE
45	TQI	79917-0060	56CKT PASS THROUGH ADAPTERS	N/A	N/A	N/A	BLACK	AVAILABLE
46	MOLEX	63813-1500	6.35mm APEX TERM SERVICE TOOL	N/A	N/A	N/A	N/A	AVAILABLE

* MX123 WIRE HARNESS COVER
MATES TO ANY 18/49/56 CKT
MX123 HARN CONN ASSY
SHOWN ON THIS TABLE

ENTER DESCRIPTION
EC NO: UAU2017-0870 2017/03/27
DRWN:ACHITALIA 2017/03/29
CHKD:
APPR: VKOSHY
DESCRIPTION
REV
A4

QUALITY SYMBOLS
=0
=0
=0

GENERAL TOLERANCES (UNLESS SPECIFIED)

	mm	INCH
4 PLACES	± ---	± ---
3 PLACES	± ---	± ---
2 PLACES	± 0.13	± ---
1 PLACE	± 0.25	± ---
0 PLACE	± ---	± ---

ANGULAR ± 1 °
DRAFT WHERE APPLICABLE MUST REMAIN WITHIN DIMENSIONS

DIMENSION STYLE: MM ONLY
SCALE: 1:1
DESIGN UNITS: METRIC
THIRD ANGLE PROJECTION

DRAWN BY	SKRAJENDRANA	DATE 2016/12/15
CHECKED BY	VKOSHY	DATE 2016/12/15
APPROVED BY	VKOSHY	DATE 2017/03/03

TITLE
ICD - MX123 18/49/56CKT
INTERFACE CONNECTION DRW
MOLEX

molex

MATERIAL NO. SEE BOM TABLE
DOCUMENT NO. SD-34576-0001
SHEET NO. 4 OF 22
SIZE D

THIS DRAWING CONTAINS INFORMATION THAT IS PROPRIETARY TO MOLEX INCORPORATED AND SHOULD NOT BE USED WITHOUT WRITTEN PERMISSION

NOTES: UNLESS OTHERWISE SPECIFIED

1. MATERIAL FOR INTERFACE:

A. RESIN:
1. 30% G.F. PBT, 20% MAX. (BY WEIGHT) REGRIND.
2. MATING CONNECTOR INTERFACE PART COLOR MUST BE SAME AS MATCHING KEYED HARNESS CONNECTOR ASSEMBLY.
3. MUST BE VALIDATED FOR INDIVIDUAL DEVICE APPLICATION REQUIREMENTS.

B. 0.64MM PINS:
1. BASE MATERIAL: COPPER ALLOY, CONDUCTIVITY >= 28% IACS AT 20°C, TENSILE STRENGTH >= 635 N/mm², SURFACE ROUGHNESS R=6 MAX.
2. PLATING FINISH: SILVER (Ag). PLATING TO BE 1.9-3.3 um ELECTRODEPOSITED SEMI-BRIGHT SILVER OVER 1.25-2.25 um DUCTILE SULPHAMATE NICKEL PER NOTE 1(D).
3. ANTI-TARNISH: SYNTHETIC HYDROCARBON CONTACT SURFACE FINISH OR EQUIVALENT APPLIED WITHOUT VOID TO CONTACT AREA (MIN 3.7mm FROM PIN TIP).

C. 2.8MM BLADE:
1. BASE MATERIAL: COPPER ALLOY, CONDUCTIVITY>= 28% IACS AT 20°C, TENSILE STRENGTH >= 350 N/mm², SURFACE ROUGHNESS R=6 MAX.
2. PLATING FINISH: TIN. PLATING TO BE 2.5-5.0 um ELECTRODEPOSITED TIN, MATTE FINISH OVER 1.25-2.5um DUCTILE SULPHAMATE NICKEL PER NOTE 1(D).

D. 6.3MM BLADE:
1. BASE MATERIAL: COPPER ALLOY, CONDUCTIVITY>= 50% IACS AT 20°C,
2. PLATING FINISH: SILVER (Ag) PLATING TO BE 1.9-3.3 um ELECTRODEPOSITED SEMI-BRIGHT SILVER, OVER 1.25-2.5um DUCTILE SULPHAMATE NICKEL PER NOTE 1(D) WITH ENVIRONMENTAL BARRIER
OR
TIN/SILVER (ELECTRO-DEPOSITED), UNDERPLATE 0.5-2.0 um NICKEL OR COPPER. TOP PLATING: 1.0-3.0 um (SILVER RANGE 3.75-X.XX NO ANTI-TARNISH COATING REQUIRED).

E. PLATING REQUIREMENTS:
1. SILVER PLATING
a. 99.5% PURE SEMI-BRIGHT WITH NO ORGANIC BRIGHTNERS OR CHROMATES.
2. NICKEL PLATING
a. ELECTRODEPOSITED DUCTILE SULFAMATE NICKEL WITH A NON-BRIGHTENED FINISH. NO ORGANIC OR BRIGHTENING AGENTS SHALL BE ALLOWED.
b. SHALL ONLY BE USED AS AN UNDERLYING PLATING AND MAY NOT BE USED AS AN ELECTRICAL CONTACT SURFACE PLATING.
c. SHALL BE NODULE FREE WHEN VIEWED AT 10X MAGNIFICATION IN MEASURED IN CONTACT SURFACE AREA PLUS 0.5MM PERIMETER AROUND THE CONTACT SURFACE AREA.
d. ALL PLATINGS SHALL HAVE A 1.0% MAXIMUM BY WEIGHT IMPURITIES. IMPURITIES ARE DEFINED AS ALL ELEMENTS NOT THE PRIMARY PLATING OR HARDENING AGENT IF APPLICABLE, AS DETERMINED BY WET CHEMICAL ANALYSIS OR AUGER METHOD. NO SINGLE IMPURITY SHALL EXCEED 0.1% MAXIMUM BY WEIGHT.
3. TESTING
a. THICKNESS TO BE MEASURED IN CONTACT SURFACE AREA PLUS 0.5MM PERIMETER AROUND THE CONTACT SURFACE AREA AS DESIGNATED IN THE DRAWING. THICKNESS SHALL BE DETERMINED BY METHOD OF X-RAY (XRF).
b. PLATING ADHESION SHALL BE TESTED BY A BEND TEST FOR ALL METALS. THE TEST SAMPLE SHALL BE BENT 90 DEGREES TO DETERMINE DEPOSIT ADHESION. TESTING SHALL BE COMPLETED IN ACCORDANCE WITH ASTM SPEC B571.

2. DESIGN - GENERAL:

A. THIS IS A 100% CAD GENERATED PART. THE CAD MATHEMATICAL DATA IS THE MASTER FOR THIS PART. WHERE DIMENSIONS ARE SPECIFIED ON THE DRAWING, THE DRAWING IS THE AUTHORITY FOR DIMENSIONAL VALUES. FOR DIMENSIONAL OR ANY INFORMATION NOT SHOWN ON THIS DRAWING, ANALYZE THE CAD MODEL.
B. DIMENSIONS OBTAINED FROM THE DIGITAL MODEL ARE BASIC:
1. FOR RELATIONSHIPS BETWEEN FEATURES WHEN ESTABLISHED BY GEOMETRIC TOLERANCES.
2. FOR THE FORM OF A FEATURE WHEN CONTROLLED BY A PROFILE TOLERANCE.
3. FOR THE SIZE, FORM AND/OR RELATIONSHIP BETWEEN FIXED DATUM TARGETS.
C. DIMENSIONS OBTAINED FROM THE DIGITAL MODEL ARE ROUNDED TO TWO DECIMAL PLACES (PER IEEE/ASTM SI 10-2002)
D. VIEWS AND SECTIONS ON THIS DRAWING ARE IN ACCORDANCE WITH GM DCS SECTION C3.
E. THE DIGITAL MODEL MUST CORRESPOND TO THE RELEASE LEVEL SHOWN IN THE PART BLOCK ON THIS DOCUMENT.
F. TOLERANCES:
1. LINEAR 0.X ± 0.30
0.XX ± 0.10
0.XXX ± 0.10
2. ANGULAR X° ± 3°
3. ⌓ 1.0 A B C
G. MINIMUM WALL THICKNESS REQUIRED: 1.3mm.
H. CORNERS SHOWN AS SHARP TO BE R 0.2 MAX.
J. LETTERING SHALL BE 0.15 MAX RAISED IN 0.20 MAX RECESS PAD. THIS INCLUDES MATERIAL CODE, RECYCLING CODE, CAVITY ID AND DATE CODE.
K-1. PARTS MUST BE FREE OF DISCOLORATION, SALT RESIDUE AND OTHER IMPERFECTIONS THAT AFFECT FIT OR FUNCTION.
K-2. SCRATCHES OR DENTS NOT TO EXCEED 0.013mm IN DEPTH.
L. FOLLOWING PRODUCTION CODES TO BE PERMANENTLY MARKED & HUMAN READABLE TO A LETTER HEIGHT OF 1.5 ±0.5MM X 0.3 MAX DEEP
1. MATERIAL #: XXXXX-XXXX
2. DATE CODE: JJJY (JULIAN DAY, LAST DIGIT OF YEAR)
3. INSPECTION MACHINE CODE + SERIAL #: X_XXXXX

3. DESIGN - MANUFACTURING:

A. DRAFT TO BE WITHIN TOLERANCE.
B. ALLOWABLE FLASH MAX 0.2 HIGH X MAX 0.13 THICK.
C. ALLOWABLE PARTING LINE MISMATCH 0.2 MAX.
D. EJECTOR PINS MARK TO BE FLUSH TO 0.25 MAX DEPRESSED.
E. ALLOWABLE GATE VESTIGE FLUSH TO 0.25 MAX PROTRUSION.
F. NO EXTERNAL MOLD RELEASE AGENT ALLOWED DURING MANUFACTURING.
G. STEEL THAT FORMS THE INDICATED SURFACE MUST BE POLISHED WITH A DIAMOND FINISH (SPI A-2) OVER THE FULL PERIPHERY OF THE TOOL. SURFACE MUST HAVE NO MISMATCH.
H. ANY PROCESS LUBRICANT REMAINING ON THE TERMINAL MUST NOT VARNISH OR DEGRADE IT'S ELECTRICAL PERFORMANCE UP TO A MAXIMUM CLASS AMBIENT TEMPERATURE PER SAE USCAR-2 FOR 1008 HOURS. PROCESS LUBRICANTS SHOULD BE APPROVED BY THE RESPONSIBLE ENGINEER.
J. OPTIONAL FEATURES PROVIDED FOR AUTOMATION.
K. PART MUST BE FREE FROM BURRS AND SHARP EDGES, WHICH MIGHT BE DETRIMENTAL TO SATISFACTORY ASSEMBLY, SAFE HANDLING OR FUNCTION OF PART.
L. PARTS AS DELIVERED TO ASSEMBLY SHALL BE CLEAN AND FREE OF DEBRIS, RESIDUAL ABRASIVE MATERIAL AND CORROSION PRODUCTS ADVERESLY AFFECTING FUNCTION OR APPEARENCE.
M. RESTRICTED AND REPORTABLE SUBSTANCES FOR PARTS PER GMW3059.

ENTER DESCRIPTION EC NO: UAU2017-0870 DRWN:ACHITALIA 2017/03/27 CHKD: APPR:VKOSHY 2017/03/29 A4	REV DESCRIPTION	QUALITY SYMBOLS =0 =0 =0	GENERAL TOLERANCES (UNLESS SPECIFIED) mm / INCH 4 PLACES ± --- / ± --- 3 PLACES ± --- / ± --- 2 PLACES ± 0.13 / ± --- 1 PLACE ± 0.25 / ± --- 0 PLACE ± --- / ± --- ANGULAR ± 1 ° DRAFT WHERE APPLICABLE MUST REMAIN WITHIN DIMENSIONS	DIMENSION STYLE MM ONLY DRAWN BY SKRAJENDRANA DATE 2016/12/15 CHECKED BY VKOSHY DATE 2016/12/15 APPROVED BY VKOSHY DATE 2017/03/03 MATERIAL NO. SEE BOM TABLE SIZE D	SCALE 1:1 DESIGN UNITS METRIC THIRD ANGLE PROJECTION TITLE ICD - MX123 18/49/56CKT INTERFACE CONNECTION DRW MOLEX molex DOCUMENT NO. SD-34576-0001 SHEET NO. 5 OF 22 THIS DRAWING CONTAINS INFORMATION THAT IS PROPRIETARY TO MOLEX INCORPORATED AND SHOULD NOT BE USED WITHOUT WRITTEN PERMISSION				

NOTES: UNLESS OTHERWISE SPECIFIED

4. SYSTEM REQUIREMENTS:

A. HARNESS CONNECTOR IS COMPATIBLE WITH THE FOLLOWING WIRE SIZE NO'S:
0.35mm2, MEETING GMW15626 - MIN OD OF 1.20MM
0.50mm2, MEETING GMW15626
0.75mm2, MEETING GMW15626 - MAX OD OF 2.06MM

B. CABLE TIE SPECIFICATIONS:
1. CABLE TIE:
TENSILE RATING: 220N / (50lbs) MIN
TIE LENGTH: 186mm MIN
TIE WIDTH: 4.75mm MAX
MATERIAL: NYLON
2. INSTALLATION:
CABLE TIE TENSION: 190N MIN
3. DRESSED WIRE BUNDLE PACKAGING: SEE FIG. 1

C. WHEN MATED WITH COMPONENT CONNECTOR INTERFACE AND/OR DRESS COVER, HARNESS CONNECTOR SYSTEM CONFORMS TO THE FOLLOWING:
1. SAE/USCAR-2, REV: 3 APRIL, 2001, CLASS 3
2. FIELD CORRELATED LIFE TEST, SAE/USCAR-20, NOV. 2001
3. GMW #3191 AUGUST 22, 2000 (DRAFT), TEMPERATURE CLASS 3 (145°C), SEALING CLASS 1 (HIGH PRESSURE SPRAY), VIBRATION CLASS 2 (ON BODY)
4. TPA USER FORCES (FULLY POPULATED WITH TERMINALS)
a. REMOVAL FROM LOCK TO PRE-SET: <=120N

D. WIRE SPECIFICATIONS:
1. WIRE SURFACE MUST BE FREE OF SCRATCHES, GROOVES OR DENTS WHERE FUNCTIONAL

5. TERMINAL CURRENT RATINGS:

A. MX64 RCPT TERM
ALL TESTING DONE IN ACCORDANCE WITH USCAR-2 REV5 SECTION 5.3

1. MX64 RCPT TERM Ag 0.50/0.75mm2 CRIMPED TO 0.75mm2 ISO WIRE AND MATED TO MX123 0.64MM PIN: SEE TABLE BELOW
2. MX64 RCPT TERM Ag 0.35mm2 CRIMPED TO 0.35mm2 ISO WIRE AND MATED TO MX123 0.64MM PIN: SEE TABLE BELOW

WIRE	CURRENT RATING			
	23 °C	85 °C	105 °C	125 °C
0.75mm2	11.3A	11.3A	9.5A	6.6A
0.50mm2	10.0A	10.0A	8.3A	5.7A
0.35mm2	8.5A	8.5A	7.1A	5.0A

B. 2.8MM RCPT TERM
ALL TESTING DONE IN ACCORDANCE WITH MOLEX DVP&R 0279 (TR# 7125)

1. 2.8MM RCPT TERM TIN 2.0mm2 CRIMPED TO 2.0mm2 ISO WIRE AND MATED TO MX123 2.8MM BLADE: 25.6 AMPS AT 125°C

C. 6.3MM RCPT TERM - DELPHI APEX
ALL TESTING DONE IN ACCORDANCE WITH USCAR-2 REV5 SECTION 5.3

1. 6.3MM RCPT TERM TIN/SILVER CRIMPED TO 6.0MM BLADE (Sn/Ag PLATED): 36A AT 125°C

6. CONTACT MOLEX AUTOMOTIVE FOR AVAILABLE CUSTOM PATTERNS OF CAVITIES OPEN FOR CIRCUITS - SEE GM DRAWING 13507495

ENTER DESCRIPTION
EC NO: UAU2017-0870 2017/03/27
DRWN:ACHITALIA 2017/03/29
CHKD:
APPR:VKOSHY
DESCRIPTION
REV
A4

QUALITY SYMBOLS
4 PLACES =0
3 PLACES =0
2 PLACES =0

GENERAL TOLERANCES (UNLESS SPECIFIED)

	mm	INCH
4 PLACES	± ---	± ---
3 PLACES	± ---	± ---
2 PLACES	± 0.13	± ---
1 PLACE	± 0.25	± ---
0 PLACE	± ---	± ---
ANGULAR ± 1 °		

DRAFT WHERE APPLICABLE MUST REMAIN WITHIN DIMENSIONS

DIMENSION STYLE: MM ONLY
SCALE: 1:1
DESIGN UNITS: METRIC
THIRD ANGLE PROJECTION

DRAWN BY: SKRAJENDRANA DATE: 2016/12/15
CHECKED BY: VKOSHY DATE: 2016/12/15
APPROVED BY: VKOSHY DATE: 2017/03/03
MATERIAL NO.: SEE BOM TABLE

TITLE: ICD - MX123 18/49/56CKT INTERFACE CONNECTION DRW MOLEX

molex

DOCUMENT NO.: SD-34576-0001
SHEET NO.: 6 OF 22
SIZE: D

THIS DRAWING CONTAINS INFORMATION THAT IS PROPRIETARY TO MOLEX INCORPORATED AND SHOULD NOT BE USED WITHOUT WRITTEN PERMISSION

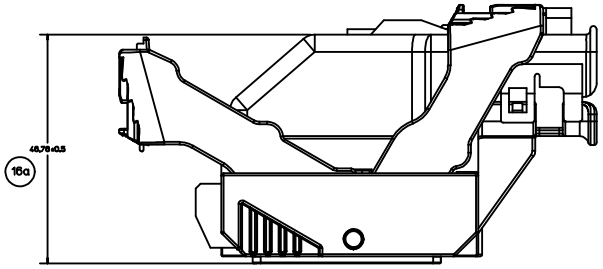

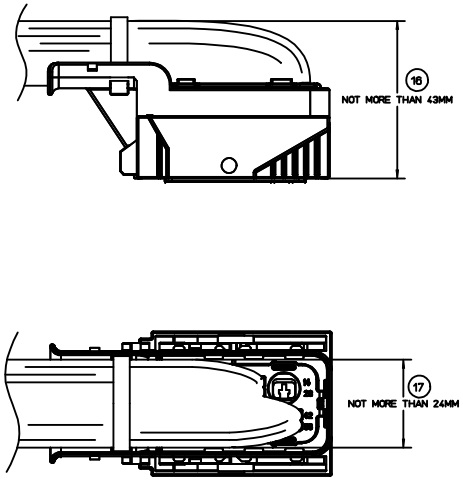

Fig. 1

ENTER DESCRIPTION EC NO: UAU2017-0870 DRWN:ACHITALIA 2017/03/27 CHKD: APPR:VKOSHY 2017/03/29 A4	REV DESCRIPTION	QUALITY SYMBOLS =0 =0 =0	GENERAL TOLERANCES (UNLESS SPECIFIED) mm / INCH 4 PLACES ± --- / ± --- 3 PLACES ± --- / ± --- 2 PLACES ± 0.13 / ± --- 1 PLACE ± 0.25 / ± --- 0 PLACE ± --- / ± --- ANGULAR ± 1 ° DRAFT WHERE APPLICABLE MUST REMAIN WITHIN DIMENSIONS	DIMENSION STYLE MM ONLY DRAWN BY / DATE SKRAJENDRANA 2016/12/15 CHECKED BY / DATE VKOSHY 2016/12/15 APPROVED BY / DATE VKOSHY 2017/03/03 MATERIAL NO. SEE BOM TABLE SIZE D	SCALE 1:1 DESIGN UNITS METRIC THIRD ANGLE PROJECTION TITLE ICD - MX123 18/49/56CKT INTERFACE CONNECTION DRW MOLEX molex DOCUMENT NO. SD-34576-0001 SHEET NO. 7 OF 22 THIS DRAWING CONTAINS INFORMATION THAT IS PROPRIETARY TO MOLEX INCORPORATED AND SHOULD NOT BE USED WITHOUT WRITTEN PERMISSION	

fb_frame_D_P_AM_T
Rev. G 2012/01/11

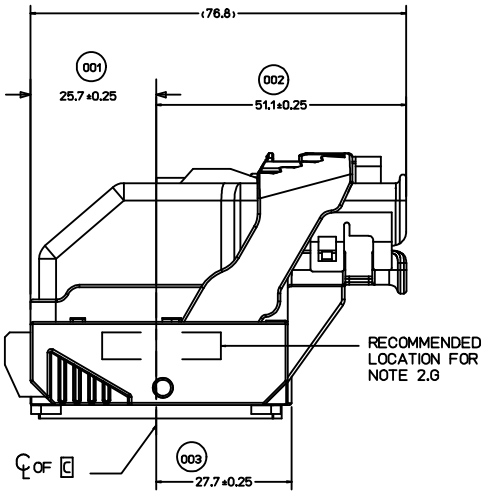

WIRE DRESS OPTION 0 SHOWN

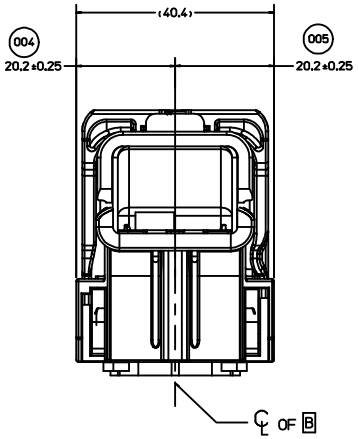

WIRE DRESS OPTION 0 SHOWN

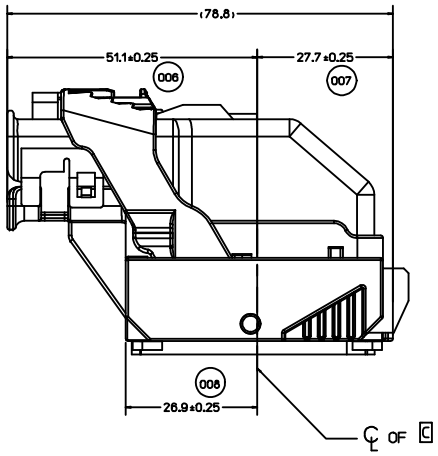

WIRE DRESS OPTION 9 SHOWN

ENTER DESCRIPTION EC NO: UAU2017-0870 DRWN:ACHITALIA 2017/03/27 CHKD: APPR:VKOSHY 2017/03/29 DESCRIPTION	QUALITY SYMBOLS =0 =0 =0	GENERAL TOLERANCES (UNLESS SPECIFIED) mm / INCH 4 PLACES ± --- / ± --- 3 PLACES ± --- / ± --- 2 PLACES ± 0.13 / ± --- 1 PLACE ± 0.25 / ± --- 0 PLACE ± --- / ± --- ANGULAR ± 1 ° DRAFT WHERE APPLICABLE MUST REMAIN WITHIN DIMENSIONS	DIMENSION STYLE MM ONLY DRAWN BY SKRAJENDRANA DATE 2016/12/15 CHECKED BY VKOSHY DATE 2016/12/15 APPROVED BY VKOSHY DATE 2017/03/03 MATERIAL NO. SEE BOM TABLE	SCALE 1:1 DESIGN UNITS METRIC THIRD ANGLE PROJECTION TITLE ICD - MX123 18/49/56CKT INTERFACE CONNECTION DRW MOLEX molex DOCUMENT NO. SD-34576-0001 SHEET NO. 8 OF 22	A4 REV SIZE D	THIS DRAWING CONTAINS INFORMATION THAT IS PROPRIETARY TO MOLEX INCORPORATED AND SHOULD NOT BE USED WITHOUT WRITTEN PERMISSION

tb_frame_D_P_AM_T
Rev. G 2012/01/11

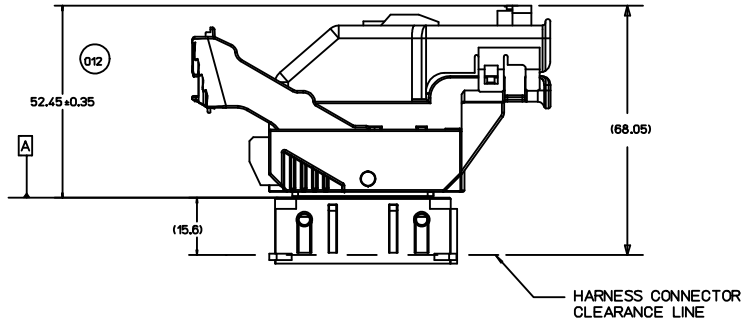

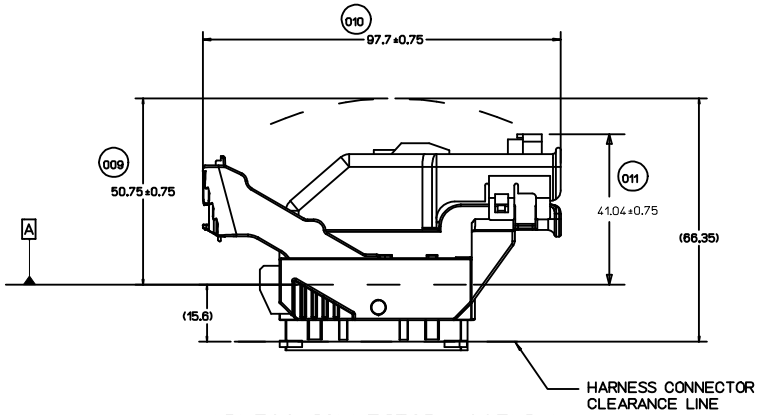

HARNESS CONNECTOR ASSEMBLY
IN PRE-LOCK POSITION

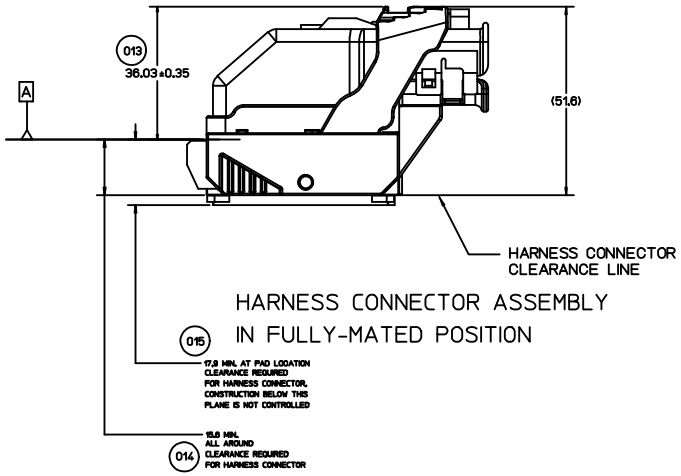

HARNESS CONNECTOR ASSEMBLY
IN FULLY-MATED POSITION

ENTER DESCRIPTION EC NO: UAU2017-0870 2017/03/27 DRWN:ACHITALIA 2017/03/29 CHKD: APPR: VKOSHY	DESCRIPTION	QUALITY SYMBOLS	GENERAL TOLERANCES (UNLESS SPECIFIED)	DIMENSION STYLE MM ONLY	SCALE 1:1	DESIGN UNITS METRIC	THIRD ANGLE PROJECTION	
A4	REV		mm / INCH	DRAWN BY / DATE SKRA JENDRANA 2016/12/15	TITLE ICD - MX123 18/49/56CKT INTERFACE CONNECTION DRW MOLEX			
		=0	4 PLACES ± --- / ± ---	CHECKED BY / DATE VKOSHY 2016/12/15				
		=0	3 PLACES ± --- / ± ---	APPROVED BY / DATE VKOSHY 2017/03/03				
		=0	2 PLACES ± 0.13 / ± ---	MATERIAL NO. SEE BOM TABLE	DOCUMENT NO. SD-34576-0001		SHEET NO. 9 OF 22	
		=0	1 PLACE ± 0.25 / ± ---					
		=0	0 PLACE ± --- / ± ---					
			ANGULAR ± 1 °					
			DRAFT WHERE APPLICABLE MUST REMAIN WITHIN DIMENSIONS	SIZE D	THIS DRAWING CONTAINS INFORMATION THAT IS PROPRIETARY TO MOLEX INCORPORATED AND SHOULD NOT BE USED WITHOUT WRITTEN PERMISSION			

molex

tb_frame_D_P_AM_T
Rev. G 2012/01/11

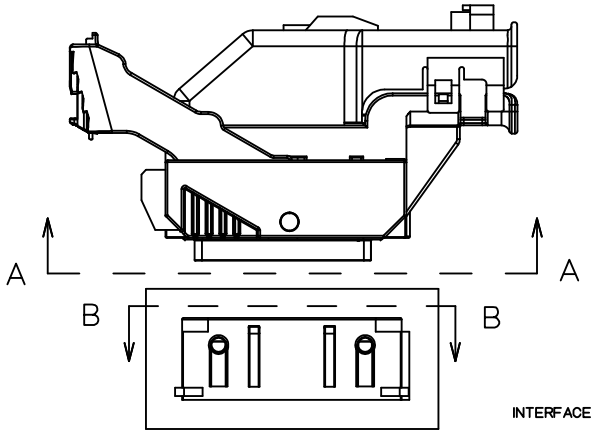

INTERFACE SIDE SHOWN IN ALL SECTION VIEWS

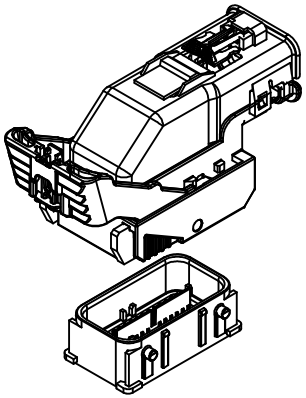

NOTE: REFERENCE THE COMPONENT TABLE
FOR KEY OPTIONS AND CONFIGURATIONS

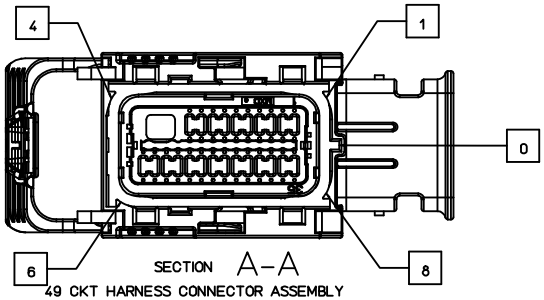

SECTION A–A
49 CKT HARNESS CONNECTOR ASSEMBLY
KEY OPTION B SHOWN

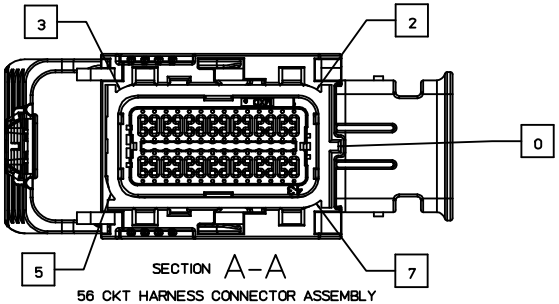

SECTION A–A
56 CKT HARNESS CONNECTOR ASSEMBLY
KEY OPTION K SHOWN

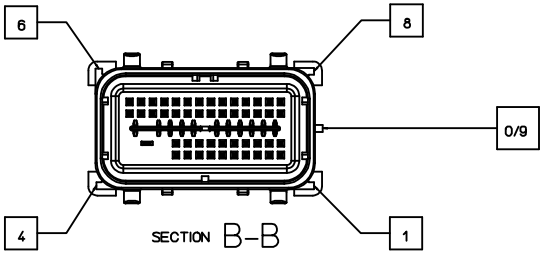

SECTION B–B
49 CKT COMPONENT CONNECTOR INTERFACE
KEY OPTION B SHOWN

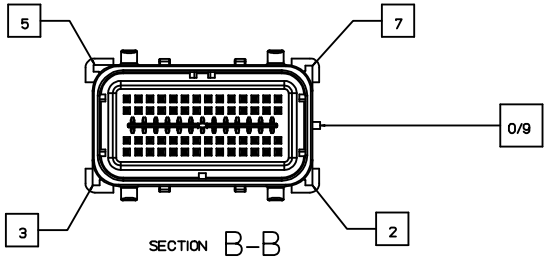

SECTION B–B
56 CKT COMPONENT CONNECTOR INTERFACE
KEY OPTION K SHOWN

ENTER DESCRIPTION EC NO: UAU2017-0870 DRWN:ACHITALIA 2017/03/27 CHKD: APPR: VKOSHY 2017/03/29 DESCRIPTION REV	QUALITY SYMBOLS =0 =0 =0 =0	GENERAL TOLERANCES (UNLESS SPECIFIED) mm / INCH 4 PLACES ± --- / ± --- 3 PLACES ± --- / ± --- 2 PLACES ± 0.13 / ± --- 1 PLACE ± 0.25 / ± --- 0 PLACE ± --- / ± --- ANGULAR ± 1 ° DRAFT WHERE APPLICABLE MUST REMAIN WITHIN DIMENSIONS	DIMENSION STYLE MM ONLY DRAWN BY / DATE SKRAJENDRANA 2016/12/15 CHECKED BY / DATE VKOSHY 2016/12/15 APPROVED BY / DATE VKOSHY 2017/03/03 MATERIAL NO. SEE BOM TABLE	SCALE 1:1 DESIGN UNITS METRIC THIRD ANGLE PROJECTION TITLE ICD - MX123 18/49/56CKT INTERFACE CONNECTION DRW MOLEX molex DOCUMENT NO. SD-34576-0001 SHEET NO. 10 OF 22	SIZE D A4	THIS DRAWING CONTAINS INFORMATION THAT IS PROPRIETARY TO MOLEX INCORPORATED AND SHOULD NOT BE USED WITHOUT WRITTEN PERMISSION

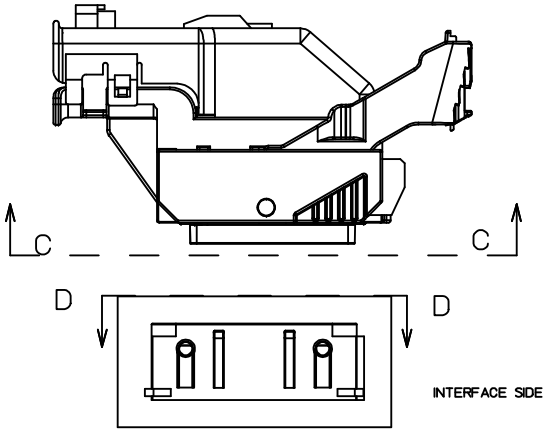

INTERFACE SIDE SHOWN ON ALL SECTION VIEWS

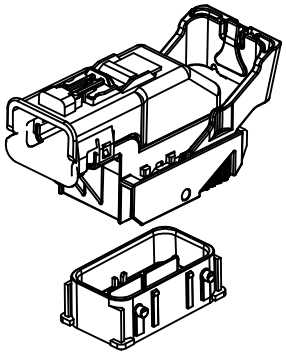

NOTE: REFERENCE THE COMPONENT TABLE
FOR KEY OPTIONS AND CONFIGURATIONS

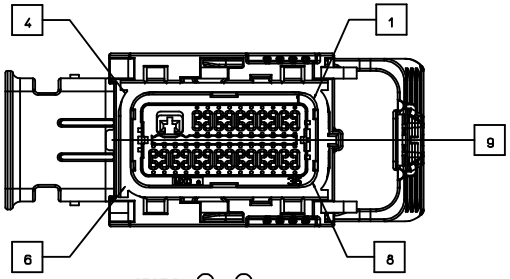

SECTION C–C

49 CKT HARNESS CONNECTOR ASSEMBLY
KEY OPTION B SHOWN

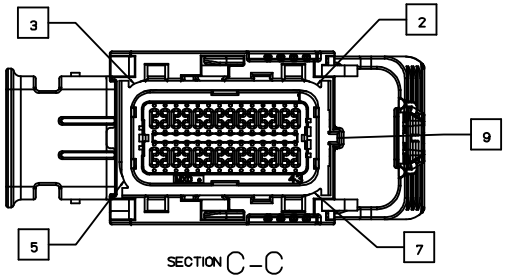

SECTION C–C

56 CKT HARNESS CONNECTOR ASSEMBLY
KEY OPTION K SHOWN

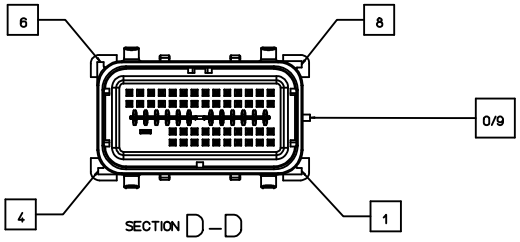

SECTION D–D

49 CKT COMPONENT CONNECTOR INTERFACE
KEY OPTION B SHOWN

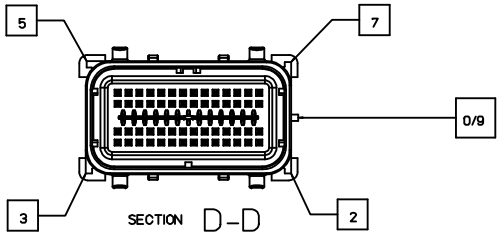

SECTION D–D

56 CKT COMPONENT CONNECTOR INTERFACE
KEY OPTION K SHOWN

ENTER DESCRIPTION EC NO: UAU2017-0870 DRWN:ACHITALIA 2017/03/27 CHKD: APPR: VKOSHY 2017/03/29 DESCRIPTION	QUALITY SYMBOLS	GENERAL TOLERANCES (UNLESS SPECIFIED)	DIMENSION STYLE MM ONLY	SCALE 1:1	DESIGN UNITS METRIC	THIRD ANGLE PROJECTION	
		mm / INCH	DRAWN BY / DATE SKRAJENDRANA 2016/12/15	TITLE ICD - MX123 18/49/56CKT INTERFACE CONNECTION DRW MOLEX			
	=0	4 PLACES ± --- / ± ---	CHECKED BY / DATE VKOSHY 2016/12/15				
	=0	3 PLACES ± --- / ± ---	APPROVED BY / DATE VKOSHY 2017/03/03				
	=0	2 PLACES ± 0.13 / ± ---	MATERIAL NO. SEE BOM TABLE	DOCUMENT NO. SD-34576-0001		SHEET NO. 11 OF 22	
	=0	1 PLACE ± 0.25 / ± ---	SIZE D	THIS DRAWING CONTAINS INFORMATION THAT IS PROPRIETARY TO MOLEX INCORPORATED AND SHOULD NOT BE USED WITHOUT WRITTEN PERMISSION			
	=0	0 PLACE ± --- / ± ---					
		ANGULAR ± 1 °					
A4	REV	DRAFT WHERE APPLICABLE MUST REMAIN WITHIN DIMENSIONS					

tb_frame_D_P_AM_T
Rev. G 2012/01/11

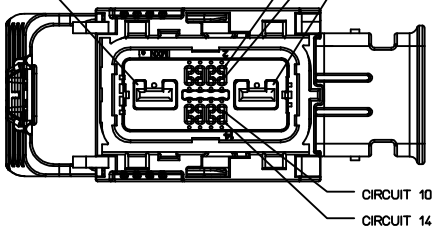

18 CKT HARNESS CONNECTOR ASSEMBLY
WIRE DRESS OPTION 0

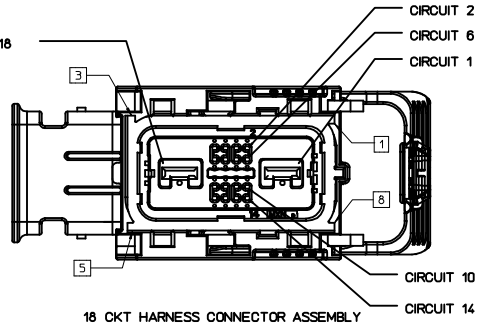

18 CKT HARNESS CONNECTOR ASSEMBLY
WIRE DRESS OPTION 9

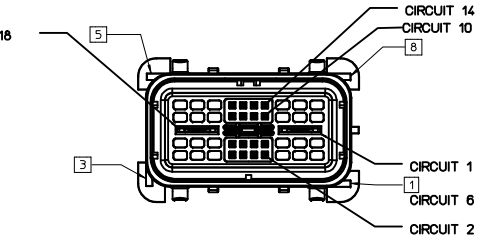

18 CKT COMPONENT CONNECTOR INTERFACE

INTERFACE SIDE SHOWN ON ALL VIEWS

ENTER DESCRIPTION EC NO: UAU2017-0870 DRWN:ACHITALIA 2017/03/27 CHKD: APPR:VKOSHY 2017/03/29 DESCRIPTION	QUALITY SYMBOLS =0 =0 =0	GENERAL TOLERANCES (UNLESS SPECIFIED) mm / INCH 4 PLACES ± --- / ± --- 3 PLACES ± --- / ± --- 2 PLACES ± 0.13 / ± --- 1 PLACE ± 0.25 / ± --- 0 PLACE ± --- / ± --- ANGULAR ± 1 °	DIMENSION STYLE MM ONLY DRAWN BY SKRAJENDRANA DATE 2016/12/15 CHECKED BY VKOSHY DATE 2016/12/15 APPROVED BY VKOSHY DATE 2017/03/03 MATERIAL NO. SEE BOM TABLE	SCALE 1:1 DESIGN UNITS METRIC THIRD ANGLE PROJECTION TITLE ICD - MX123 18/49/56CKT INTERFACE CONNECTION DRW MOLEX molex DOCUMENT NO. SD-34576-0001 SHEET NO. 12 OF 22				
A4 REV		DRAFT WHERE APPLICABLE MUST REMAIN WITHIN DIMENSIONS	SIZE D	THIS DRAWING CONTAINS INFORMATION THAT IS PROPRIETARY TO MOLEX INCORPORATED AND SHOULD NOT BE USED WITHOUT WRITTEN PERMISSION					

tb_frame_D_P_AM_T
Rev. G 2012/01/11

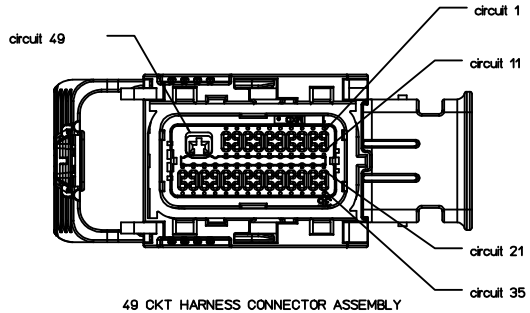

49 CKT HARNESS CONNECTOR ASSEMBLY
WIRE DRESS OPTION 0

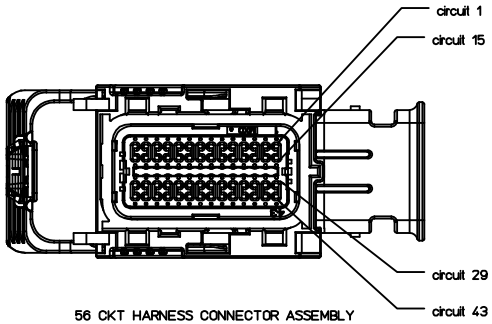

56 CKT HARNESS CONNECTOR ASSEMBLY
WIRE DRESS OPTION 0

INTERFACE SIDE SHOWN ON ALL VIEWS

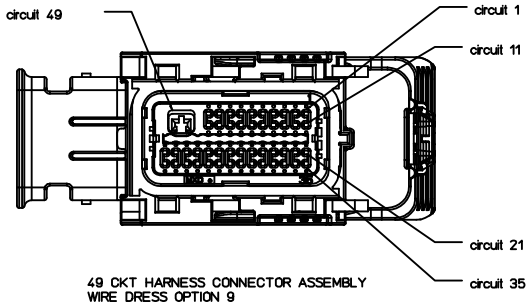

49 CKT HARNESS CONNECTOR ASSEMBLY
WIRE DRESS OPTION 9

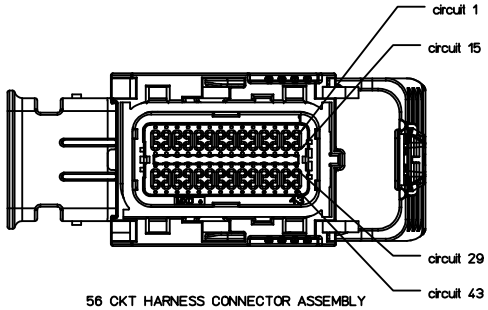

56 CKT HARNESS CONNECTOR ASSEMBLY
WIRE DRESS OPTION 9

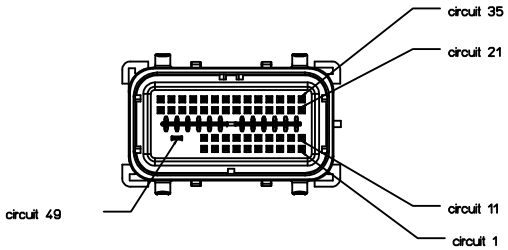

49 CKT COMPONENT CONNECTOR INTERFACE

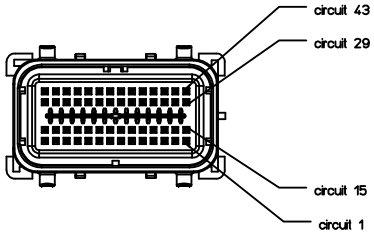

56 CKT COMPONENT CONNECTOR INTERFACE

ENTER DESCRIPTION EC NO: UAU2017-0870 DRWN:ACHITALIA 2017/03/27 CHKD: APPR: VKOSHY 2017/03/29 A4	REV / DESCRIPTION	QUALITY SYMBOLS =0 =0 =0	GENERAL TOLERANCES (UNLESS SPECIFIED) mm / INCH 4 PLACES ± --- / ± --- 3 PLACES ± --- / ± --- 2 PLACES ± 0.13 / ± --- 1 PLACE ± 0.25 / ± --- 0 PLACE ± --- / ± --- ANGULAR ± 1 ° DRAFT WHERE APPLICABLE MUST REMAIN WITHIN DIMENSIONS	DIMENSION STYLE MM ONLY DRAWN BY / DATE SKRAJENDRANA 2016/12/15 CHECKED BY / DATE VKOSHY 2016/12/15 APPROVED BY / DATE VKOSHY 2017/03/03 MATERIAL NO. SEE BOM TABLE SIZE D	SCALE 1:1 DESIGN UNITS METRIC THIRD ANGLE PROJECTION TITLE ICD - MX123 18/49/56CKT INTERFACE CONNECTION DRW MOLEX molex DOCUMENT NO. SD-34576-0001 SHEET NO. 13 OF 22	THIS DRAWING CONTAINS INFORMATION THAT IS PROPRIETARY TO MOLEX INCORPORATED AND SHOULD NOT BE USED WITHOUT WRITTEN PERMISSION

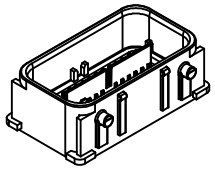

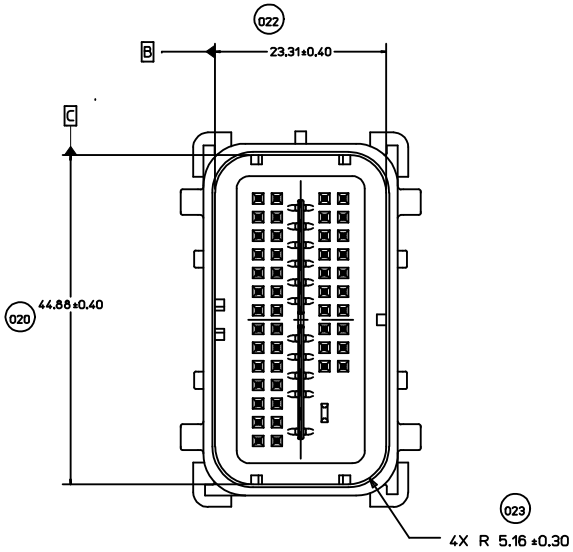

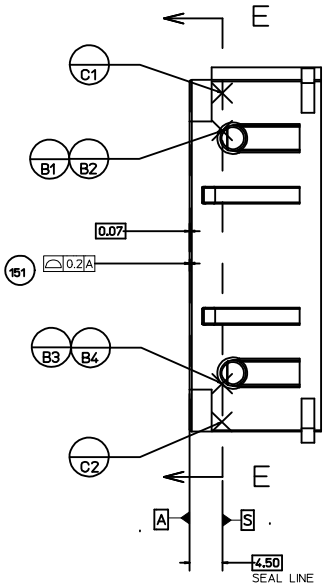

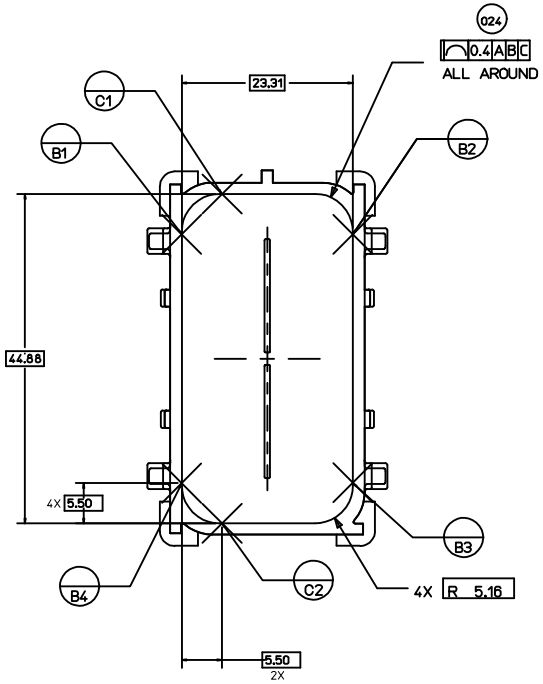

SECTION E-E
(AT SEAL LINE)

UNLESS SPECIFIED, TOLERANCE OF THE DEVICE INTERFACE TO BE 0.13 A B C

ENTER DESCRIPTION EC NO: UAU2017-0870 DRWN:ACHITALIA 2017/03/27 CHKD: APPR:VKOSHY 2017/03/29 DESCRIPTION	QUALITY SYMBOLS	GENERAL TOLERANCES (UNLESS SPECIFIED)	DIMENSION STYLE MM ONLY	SCALE 1:1	DESIGN UNITS METRIC
		mm / INCH	DRAWN BY SKRAJENDRANA DATE 2016/12/15	TITLE ICD - MX123 18/49/56CKT INTERFACE CONNECTION DRW MOLEX	THIRD ANGLE PROJECTION
	=0	4 PLACES ± --- / ± ---	CHECKED BY VKOSHY DATE 2016/12/15		
	=0	3 PLACES ± --- / ± ---	APPROVED BY VKOSHY DATE 2017/03/03		
	=0	2 PLACES ± 0.13 / ± ---	MATERIAL NO. SEE BOM TABLE	DOCUMENT NO. SD-34576-0001	SHEET NO. 14 OF 22
	=0	1 PLACE ± 0.25 / ± ---			
		0 PLACE ± --- / ± ---			
A4	REV	ANGULAR ± 1 °	SIZE D		
		DRAFT WHERE APPLICABLE MUST REMAIN WITHIN DIMENSIONS	THIS DRAWING CONTAINS INFORMATION THAT IS PROPRIETARY TO MOLEX INCORPORATED AND SHOULD NOT BE USED WITHOUT WRITTEN PERMISSION		

molex

tb_frame_D_P_AM_T
Rev. G 2012/01/11

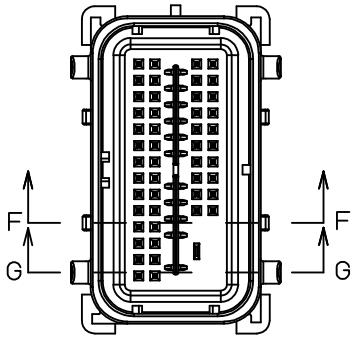

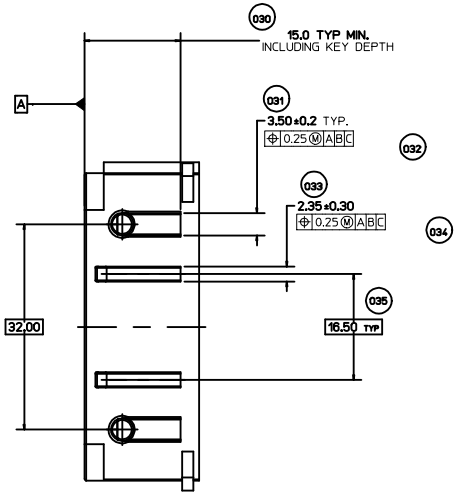

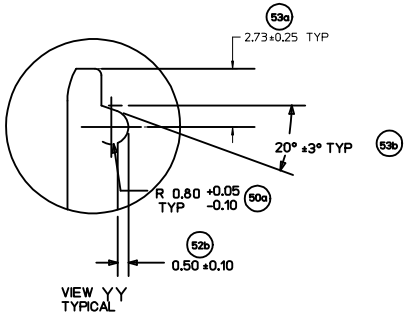

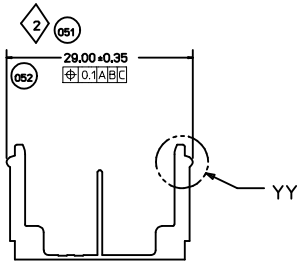

SECTION F-F
(RELEASE FEATURE)

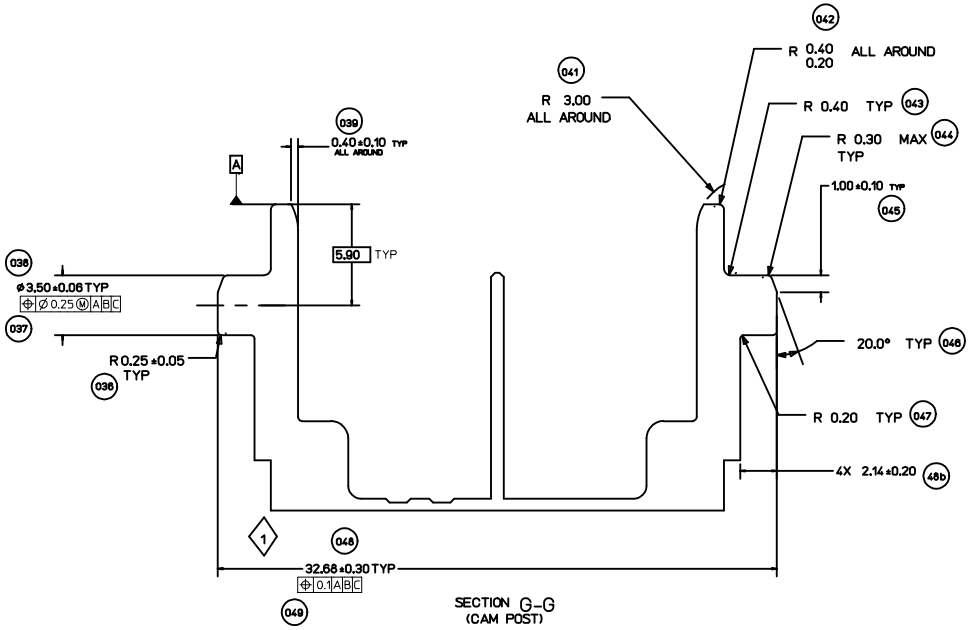

SECTION G-G
(CAM POST)

ENTER DESCRIPTION EC NO: UAU2017-0870 DRWN:ACHITALIA 2017/03/27 CHKD: APPR: VKOSHY 2017/03/29 DESCRIPTION	QUALITY SYMBOLS	GENERAL TOLERANCES (UNLESS SPECIFIED)	DIMENSION STYLE MM ONLY	SCALE 1:1	DESIGN UNITS METRIC	THIRD ANGLE PROJECTION	
		mm / INCH	DRAWN BY / DATE SKRAJENDRANA 2016/12/15	TITLE ICD - MX123 18/49/56CKT INTERFACE CONNECTION DRW MOLEX			
	=0	4 PLACES ± --- / ± ---	CHECKED BY / DATE VKOSHY 2016/12/15				
	=0	3 PLACES ± --- / ± ---					
	=0	2 PLACES ± 0.13 / ± ---	APPROVED BY / DATE VKOSHY 2017/03/03	molex			
	=0	1 PLACE ± 0.25 / ± ---					
		0 PLACE ± --- / ± ---	MATERIAL NO. SEE BOM TABLE	DOCUMENT NO. SD-34576-0001		SHEET NO. 15 OF 22	
A4	REV	ANGULAR ± 1 °	SIZE D	THIS DRAWING CONTAINS INFORMATION THAT IS PROPRIETARY TO MOLEX INCORPORATED AND SHOULD NOT BE USED WITHOUT WRITTEN PERMISSION			
		DRAFT WHERE APPLICABLE MUST REMAIN WITHIN DIMENSIONS					

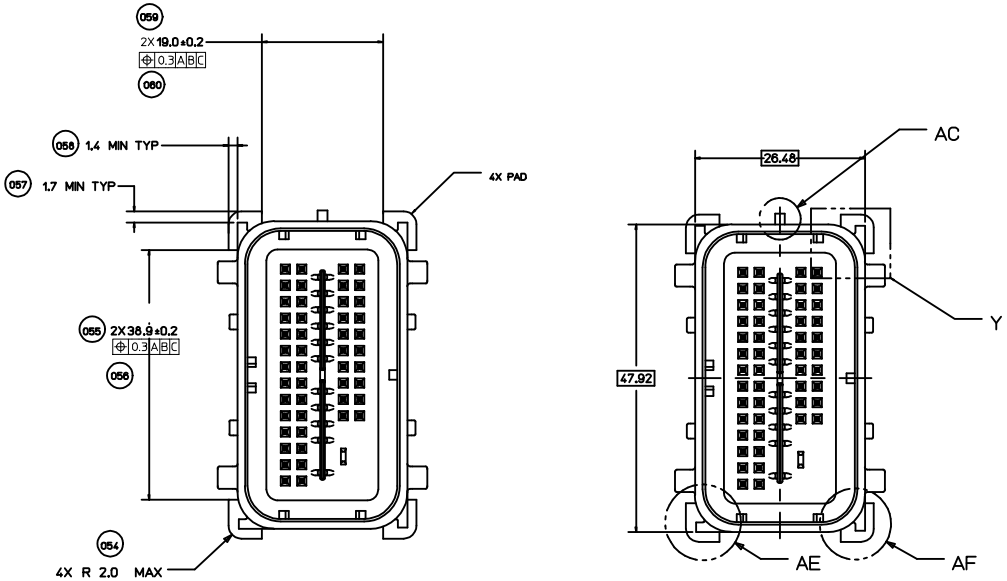

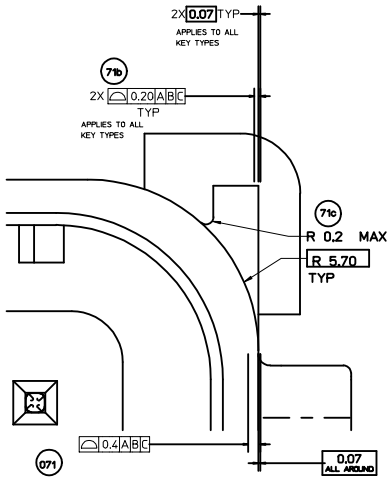

DETAIL Y

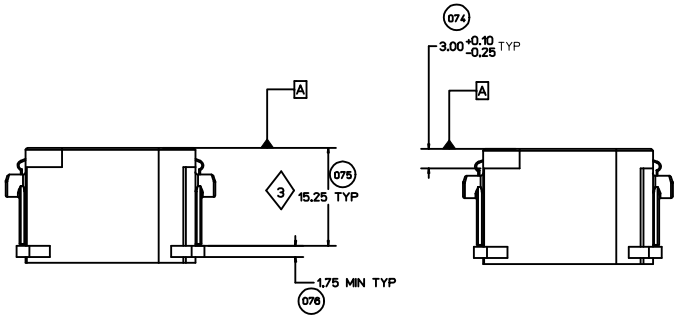

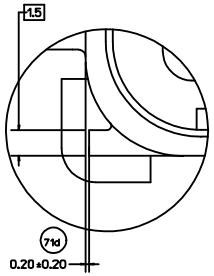

VIEW AE
KEY TYPE 2

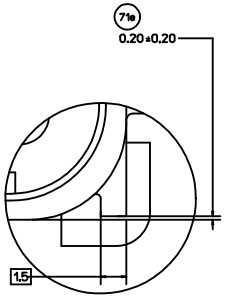

VIEW AE
KEY TYPE 1

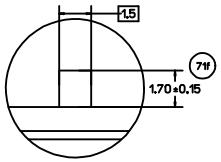

VIEW AC
KEY TYPE 3

ENTER DESCRIPTION EC NO: UAU2017-0870 DRWN:ACHITALIA 2017/03/27 CHKD: APPR:VKOSHY 2017/03/29 DESCRIPTION	QUALITY SYMBOLS	GENERAL TOLERANCES (UNLESS SPECIFIED)	DIMENSION STYLE MM ONLY	SCALE 1:1	DESIGN UNITS METRIC	THIRD ANGLE PROJECTION	
		mm / INCH	DRAWN BY / DATE SKRAJENDRANA 2016/12/15	TITLE ICD - MX123 18/49/56CKT INTERFACE CONNECTION DRW MOLEX			
	=0	4 PLACES ± --- / ± ---	CHECKED BY / DATE VKOSHY 2016/12/15				
	=0	3 PLACES ± --- / ± ---					
	=0	2 PLACES ± 0.13 / ± ---	APPROVED BY / DATE VKOSHY 2017/03/03	molex			
	=0	1 PLACE ± 0.25 / ± ---					
		0 PLACE ± --- / ± ---					
A4	REV	ANGULAR ± 1 °	MATERIAL NO. SEE BOM TABLE	DOCUMENT NO. SD-34576-0001		SHEET NO. 16 OF 22	
		DRAFT WHERE APPLICABLE MUST REMAIN WITHIN DIMENSIONS	SIZE D	THIS DRAWING CONTAINS INFORMATION THAT IS PROPRIETARY TO MOLEX INCORPORATED AND SHOULD NOT BE USED WITHOUT WRITTEN PERMISSION			

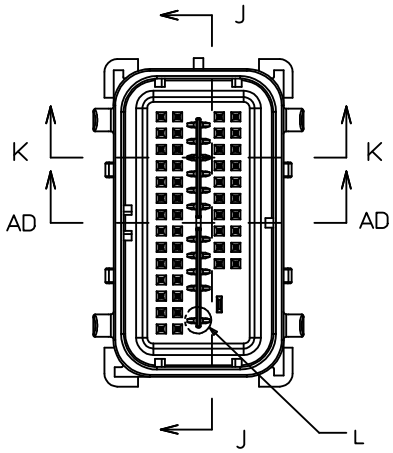

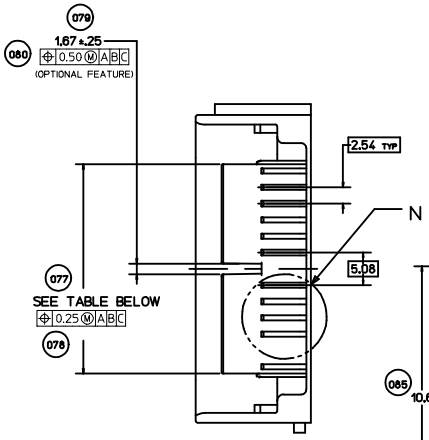

SECTION J-J

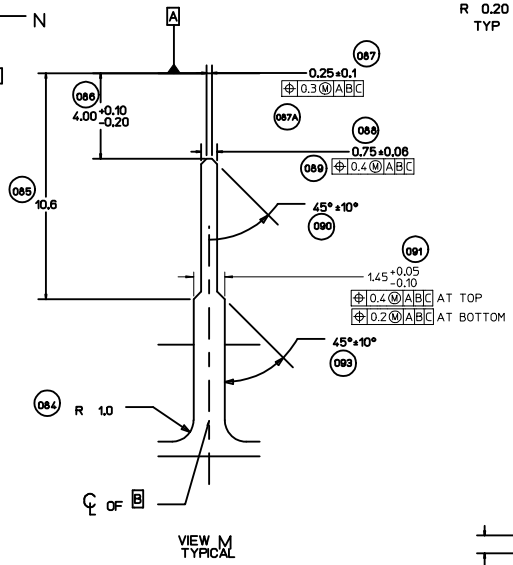

VIEW M
TYPICAL

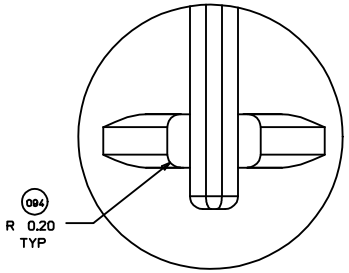

VIEW L

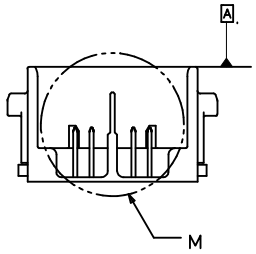

SECTION K-K

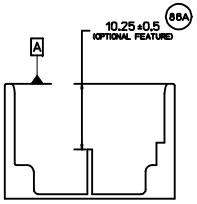

SECTION AD-AD

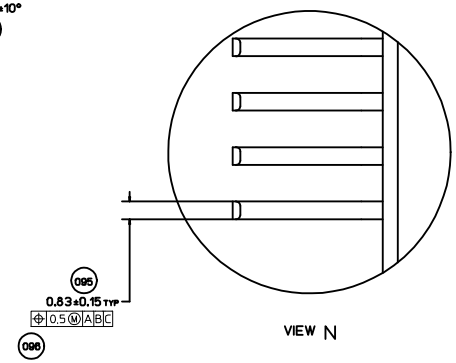

VIEW N

CKT	DIM 077
49 / 56 CKT	32.60 +0.10/-0.60
18 CKT	10.04 +0.10/-0.60

ENTER DESCRIPTION
EC NO: UAU2017-0870 2017/03/27
DRWN:ACHITALIA 2017/03/29
CHKD:
APPR: VKOSHY
DESCRIPTION
REV
A4

QUALITY SYMBOLS
=0
=0
=0
=0

GENERAL TOLERANCES (UNLESS SPECIFIED)

	mm	INCH
4 PLACES	± ---	± ---
3 PLACES	± ---	± ---
2 PLACES	± 0.13	± ---
1 PLACE	± 0.25	± ---
0 PLACE	± ---	± ---
ANGULAR ± 1 °		

DRAFT WHERE APPLICABLE MUST REMAIN WITHIN DIMENSIONS

DIMENSION STYLE: MM ONLY
SCALE: 1:1
DESIGN UNITS: METRIC
THIRD ANGLE PROJECTION

DRAWN BY	SKRAJENDRANA	DATE 2016/12/15
CHECKED BY	VKOSHY	DATE 2016/12/15
APPROVED BY	VKOSHY	DATE 2017/03/03

TITLE
ICD - MX123 18/49/56CKT
INTERFACE CONNECTION DRW
MOLEX

molex

MATERIAL NO.: SEE BOM TABLE
DOCUMENT NO.: SD-34576-0001
SHEET NO.: 17 OF 22
SIZE: D

THIS DRAWING CONTAINS INFORMATION THAT IS PROPRIETARY TO MOLEX INCORPORATED AND SHOULD NOT BE USED WITHOUT WRITTEN PERMISSION

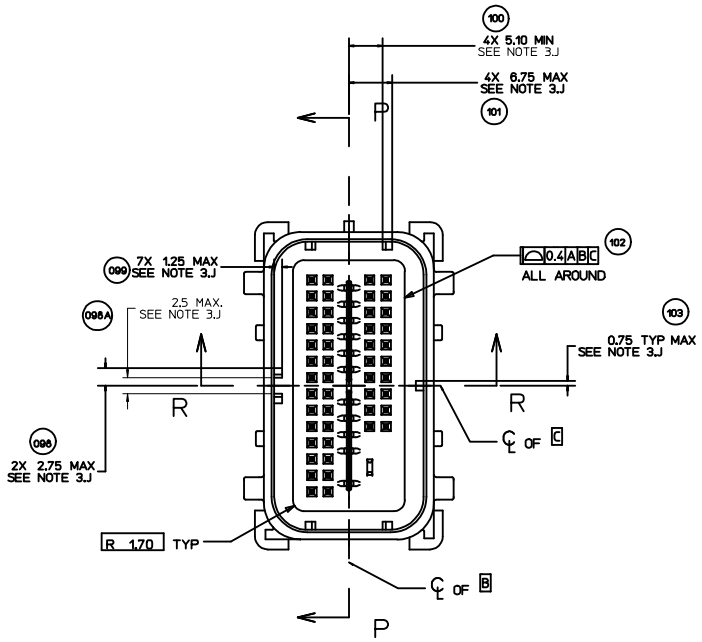

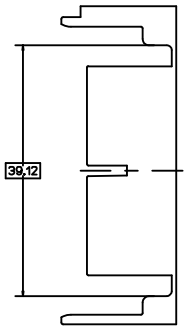

SECTION P-P

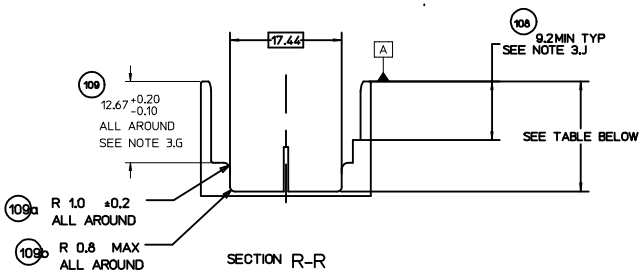

SECTION R-R

CKT	DIM 106
49 / 56 CKT	17.20 +0.20/-0.10
18 CKT	17.50 +0.20/-0.10

ENTER DESCRIPTION
EC NO: UAU2017-0870 2017/03/27
DRWN:ACHITALIA 2017/03/29
CHKD:
APPR: VKOSHY
DESCRIPTION
REV

A4

QUALITY SYMBOLS
=0
=0
=0
=0

GENERAL TOLERANCES (UNLESS SPECIFIED)

	mm	INCH
4 PLACES	± ---	± ---
3 PLACES	± ---	± ---
2 PLACES	± 0.13	± ---
1 PLACE	± 0.25	± ---
0 PLACE	± ---	± ---

ANGULAR ± 1 °

DRAFT WHERE APPLICABLE MUST REMAIN WITHIN DIMENSIONS

DIMENSION STYLE: MM ONLY

SCALE: 1:1

DESIGN UNITS: METRIC

THIRD ANGLE PROJECTION

DRAWN BY: SKRAJENDRANA DATE: 2016/12/15
CHECKED BY: VKOSHY DATE: 2016/12/15
APPROVED BY: VKOSHY DATE: 2017/03/03

TITLE: ICD - MX123 18/49/56CKT INTERFACE CONNECTION DRW MOLEX

molex

MATERIAL NO.: SEE BOM TABLE

DOCUMENT NO.: SD-34576-0001

SHEET NO.: 18 OF 22

SIZE: D

THIS DRAWING CONTAINS INFORMATION THAT IS PROPRIETARY TO MOLEX INCORPORATED AND SHOULD NOT BE USED WITHOUT WRITTEN PERMISSION

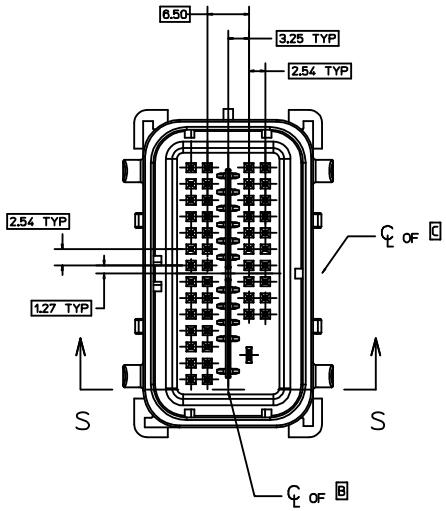

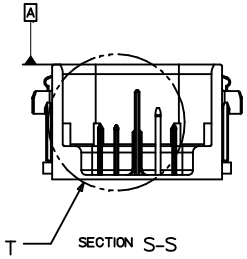

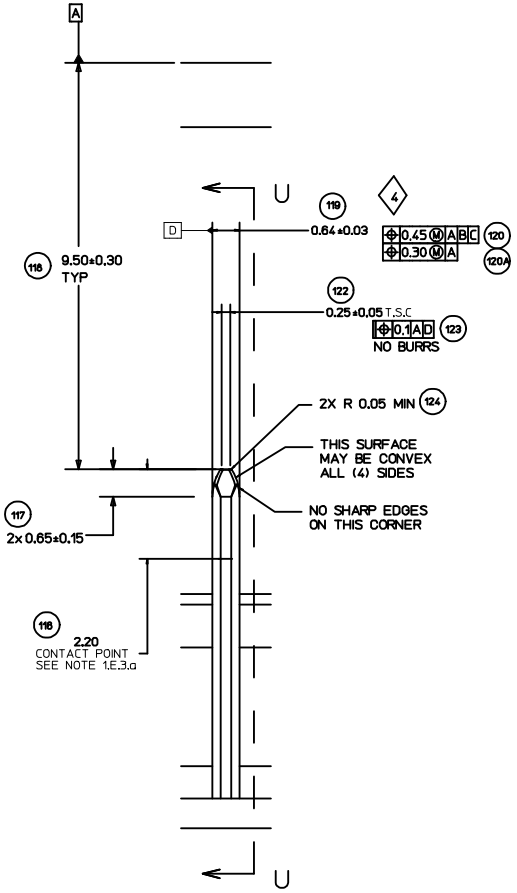

DETAIL T
TYPICAL

SECTION BB-BB

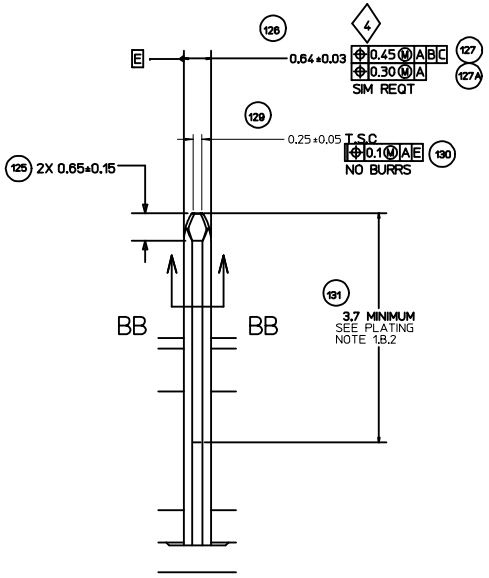

SECTION U-U
TYPICAL

ENTER DESCRIPTION EC NO: UAU2017-0870 DRWN:KACHITALIA 2017/03/27 CHKD: APPR:VKOSHY 2017/03/29 A4	REV DESCRIPTION	QUALITY SYMBOLS =0 =0 =0	GENERAL TOLERANCES (UNLESS SPECIFIED) mm / INCH 4 PLACES ± --- / ± --- 3 PLACES ± --- / ± --- 2 PLACES ± 0.13 / ± --- 1 PLACE ± 0.25 / ± --- 0 PLACE ± --- / ± --- ANGULAR ± 1 ° DRAFT WHERE APPLICABLE MUST REMAIN WITHIN DIMENSIONS	DIMENSION STYLE MM ONLY DRAWN BY SKRAJENDRANA DATE 2016/12/15 CHECKED BY VKOSHY DATE 2016/12/15 APPROVED BY VKOSHY DATE 2017/03/03 MATERIAL NO. SEE BOM TABLE SIZE D	SCALE 1:1 DESIGN UNITS METRIC THIRD ANGLE PROJECTION TITLE ICD - MX123 18/49/56CKT INTERFACE CONNECTION DRW MOLEX molex DOCUMENT NO. SD-34576-0001 SHEET NO. 19 OF 22 THIS DRAWING CONTAINS INFORMATION THAT IS PROPRIETARY TO MOLEX INCORPORATED AND SHOULD NOT BE USED WITHOUT WRITTEN PERMISSION	

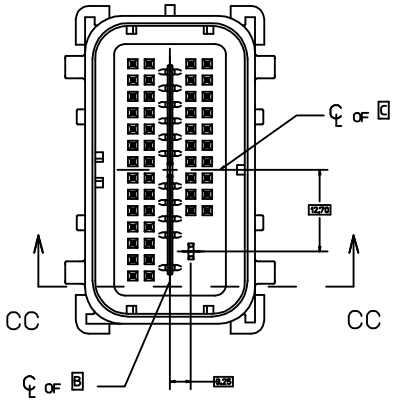

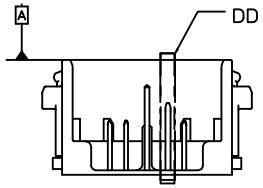

SECTION CC-CC

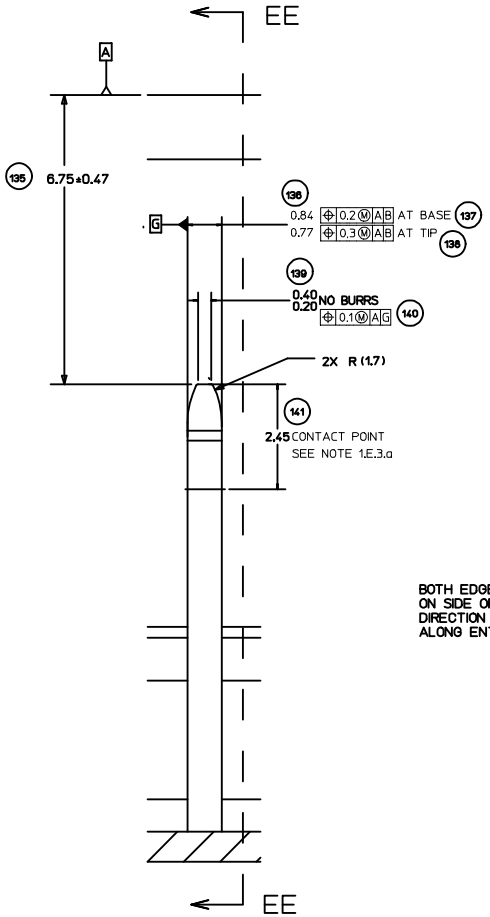

DETAIL DD
TYPICAL

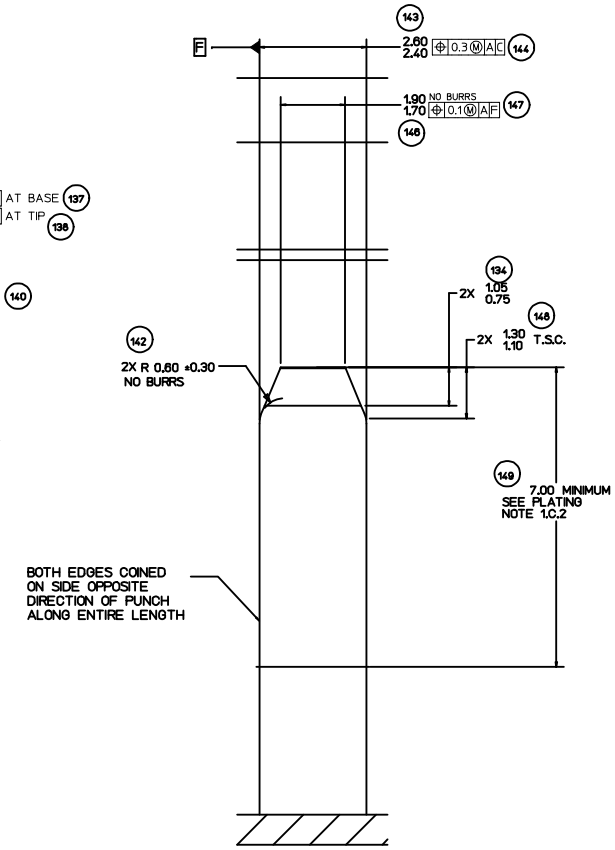

SECTION EE-EE
TYPICAL

ENTER DESCRIPTION EC NO: UAU2017-0870 2017/03/27 DRWN:ACHITALIA 2017/03/29 CHKD: APPR:VKOSHY	QUALITY SYMBOLS	GENERAL TOLERANCES (UNLESS SPECIFIED)	DIMENSION STYLE MM ONLY	SCALE 1:1	DESIGN UNITS METRIC	THIRD ANGLE PROJECTION	
		mm / INCH	DRAWN BY SKRAJENDRANA DATE 2016/12/15	TITLE ICD - MX123 18/49/56CKT INTERFACE CONNECTION DRW MOLEX			
	=0	4 PLACES ± --- / ± ---	CHECKED BY VKOSHY DATE 2016/12/15				
	=0	3 PLACES ± --- / ± ---					
	=0	2 PLACES ± 0.13 / ± ---	APPROVED BY VKOSHY DATE 2017/03/03	molex			
	=0	1 PLACE ± 0.25 / ± ---					
		0 PLACE ± --- / ± ---					
		ANGULAR ± 1 °	MATERIAL NO. SEE BOM TABLE	DOCUMENT NO. SD-34576-0001		SHEET NO. 20 OF 22	
A4		DRAFT WHERE APPLICABLE MUST REMAIN WITHIN DIMENSIONS	SIZE D	THIS DRAWING CONTAINS INFORMATION THAT IS PROPRIETARY TO MOLEX INCORPORATED AND SHOULD NOT BE USED WITHOUT WRITTEN PERMISSION			

REV DESCRIPTION

tb_frame_D_P_AM_T
Rev. G 2012/01/11

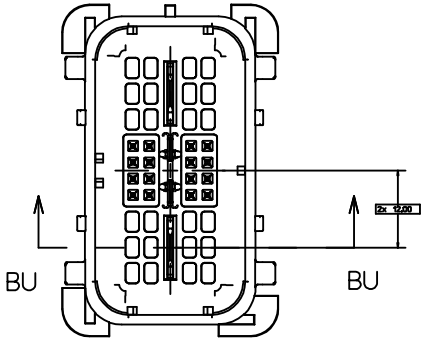

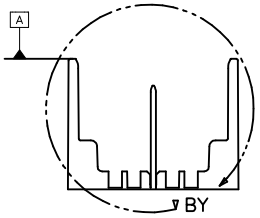

SECTION BU-BU

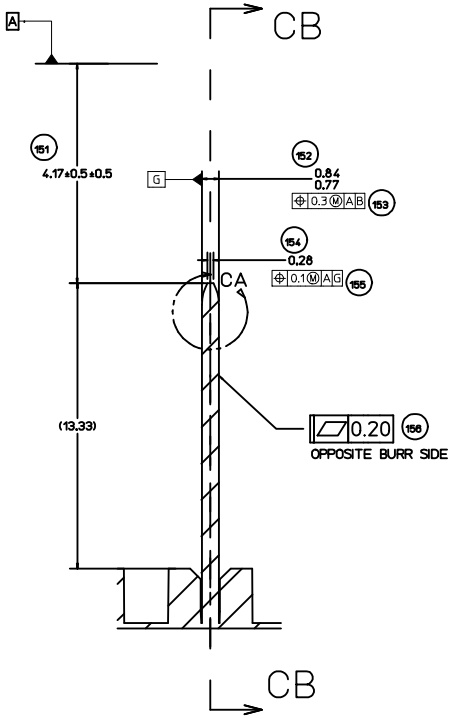

VIEW BY

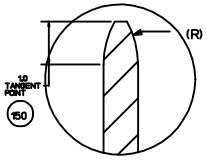

VIEW CA
SCALE 10:1

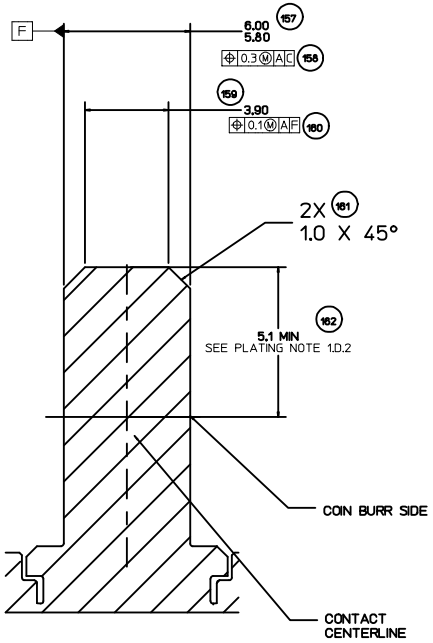

SECTION CB-CB

ENTER DESCRIPTION EC NO: UAU2017-0870 DRWN:ACHITALIA 2017/03/27 CHKD: APPR:VKOSHY 2017/03/29 A4	DESCRIPTION REV	QUALITY SYMBOLS =0 =0 =0	GENERAL TOLERANCES (UNLESS SPECIFIED) mm / INCH 4 PLACES ± --- / ± --- 3 PLACES ± --- / ± --- 2 PLACES ± 0.13 / ± --- 1 PLACE ± 0.25 / ± --- 0 PLACE ± --- / ± --- ANGULAR ± 1 ° DRAFT WHERE APPLICABLE MUST REMAIN WITHIN DIMENSIONS	DIMENSION STYLE MM ONLY DRAWN BY SKRAJENDRANA DATE 2016/12/15 CHECKED BY VKOSHY DATE 2016/12/15 APPROVED BY VKOSHY DATE 2017/03/03 MATERIAL NO. SEE BOM TABLE SIZE D	SCALE 1:1 DESIGN UNITS METRIC THIRD ANGLE PROJECTION TITLE ICD - MX123 18/49/56CKT INTERFACE CONNECTION DRW MOLEX molex DOCUMENT NO. SD-34576-0001 SHEET NO. 21 OF 22 THIS DRAWING CONTAINS INFORMATION THAT IS PROPRIETARY TO MOLEX INCORPORATED AND SHOULD NOT BE USED WITHOUT WRITTEN PERMISSION	

MOLEX MX64 RECEPTACLE TERMINAL INFORMATION						
ITEM	MOLEX P/N	WIRE SIZE MM2	TYPE	PLATING	REEL WIND DIRECTION	COMMENTS
1	34736-0025	0.35	ISO	SILVER	LEFT	
2	34736-0026	0.35	ISO	SILVER	RIGHT	
3	34736-0027	0.5 / 0.75	ISO	SILVER	LEFT	
4	34736-0028	0.5 / 0.75	ISO	SILVER	RIGHT	

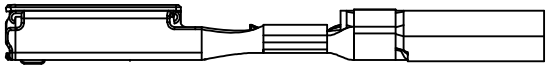

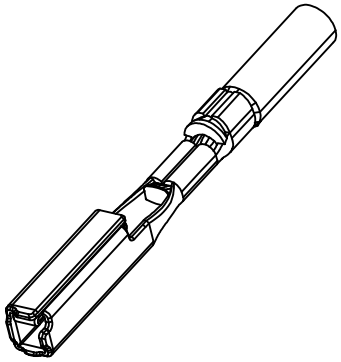

CAVITY PLUGS								
ITEM	MFG	MFG P/N	SIZE	COLOR	MFG DRAWING	PROD SPEC	APP SPEC	COMMENTS
1	MOLEX	34586-0001	0.64	NATURAL	SD-34586-001	PS-34566-0000	AS-34566-001	
2	YAZAKI	7158-3114-90	2.8	BLUE	7158-3114-90	YPES-11-04-062	YPES-15-299	

ITEM 1

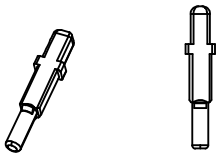

ITEM 2

ENTER DESCRIPTION EC NO: UAU2017-0870 2017/03/27 DRWN:ACHITALIA 2017/03/29 CHKD: APPR:VKOSHY DESCRIPTION A4 REV	QUALITY SYMBOLS =0 =0 =0	GENERAL TOLERANCES (UNLESS SPECIFIED) mm / INCH 4 PLACES ±--- / ±--- 3 PLACES ±--- / ±--- 2 PLACES ±0.13 / ±--- 1 PLACE ±0.25 / ±--- 0 PLACE ±--- / ±--- ANGULAR ± 1 ° DRAFT WHERE APPLICABLE MUST REMAIN WITHIN DIMENSIONS	DIMENSION STYLE MM ONLY DRAWN BY SKRAJENDRANA DATE 2016/12/15 CHECKED BY VKOSHY DATE 2016/12/15 APPROVED BY VKOSHY DATE 2017/03/03 MATERIAL NO. SEE BOM TABLE SIZE D	SCALE 1:1 DESIGN UNITS METRIC THIRD ANGLE PROJECTION TITLE ICD - MX123 18/49/56CKT INTERFACE CONNECTION DRW MOLEX molex DOCUMENT NO. SD-34576-0001 SHEET NO. 22 OF 22	THIS DRAWING CONTAINS INFORMATION THAT IS PROPRIETARY TO MOLEX INCORPORATED AND SHOULD NOT BE USED WITHOUT WRITTEN PERMISSION		