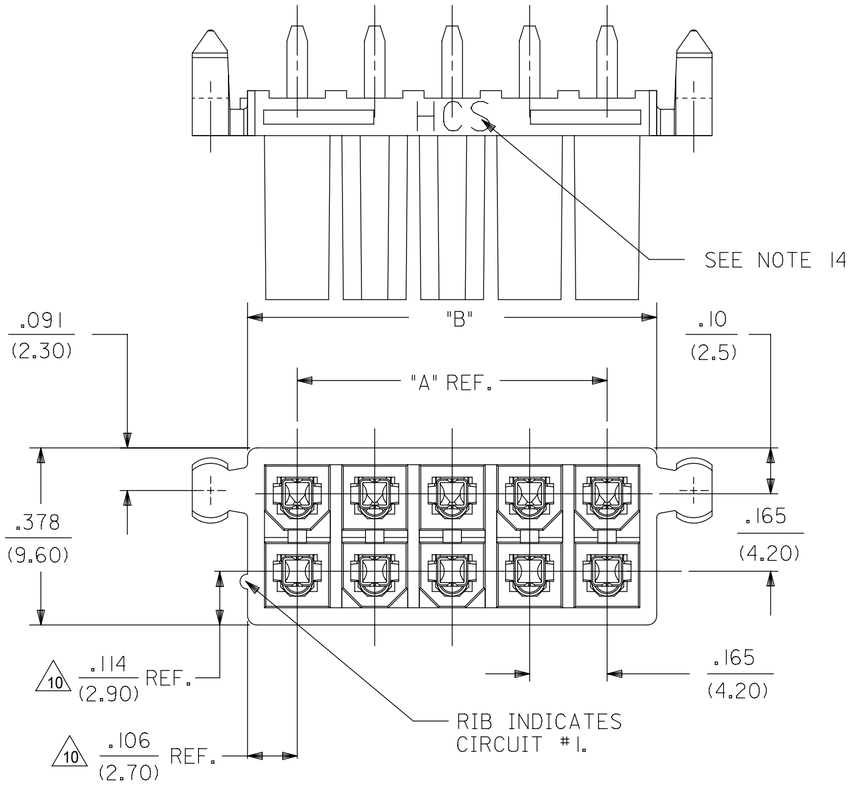

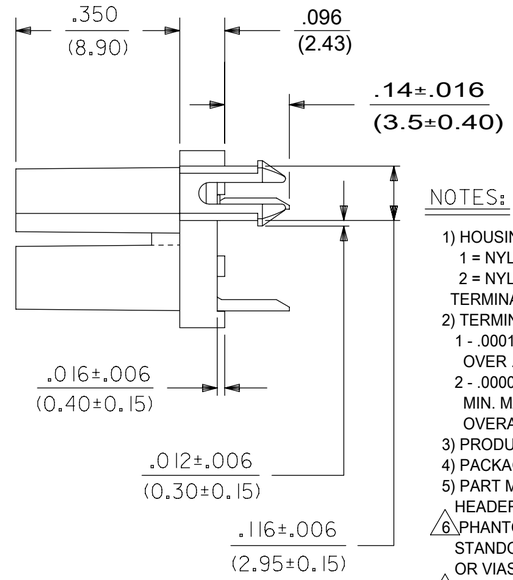

LEGEND:

44475 - ** * *

- SERIES NUMBER
- CIRCUIT SIZE (02-24)
- HOUSING MATERIAL (SEE NOTE 1.)
- PLATING (SEE NOTE 2.)

CIRCUIT SIZE	DIM. "A"	DIM. "B"	DIM. "C"
2	—	.21 (5.4)	.370 (9.40)
4	.165 (4.20)	.38 (9.6)	.535 (13.60)
6	.331 (8.40)	.54 (13.8)	.701 (17.80)
8	.496 (12.60)	.71 (18.0)	.866 (22.00)
10	.661 (16.80)	.87 (22.2)	1.031 (26.20)
12	.827 (21.00)	1.04 (26.4)	1.197 (30.40)
14	.992 (25.20)	1.20 (30.6)	1.362 (34.60)
16	1.157 (29.40)	1.37 (34.8)	1.528 (38.80)
18	1.323 (33.60)	1.54 (39.0)	1.693 (43.00)
20	1.488 (37.80)	1.70 (43.2)	1.858 (47.20)
22	1.654 (42.00)	1.87 (47.4)	2.024 (51.40)
24	1.819 (46.20)	2.03 (51.6)	2.189 (55.60)

NOTES:

1) HOUSING MATERIAL:
   1 = NYLON 6/6, UNFILLED U.L. 94V-2, COLOR: NATURAL.
   2 = NYLON 6/6, UNFILLED U.L. 94V-0, COLOR: NATURAL.
   TERMINAL MATERIAL: COPPER ALLOY.
2) TERMINAL PLATING:
   1 - .000100/(.00254) MIN. MATTE TIN OVER .000050/(.00127) MIN. NICKEL.
   2 - .000030/(.00080) MIN. SELECT GOLD, .000100/(.00254) MIN. MATTE TIN OVER .000050/(.00127) MIN. NICKEL OVERALL.
3) PRODUCT SPECIFICATION: PS-44476-001.
4) PACKAGING SPECIFICATION: PK-42385-999.
5) PART MATES WITH MINI-FIT B.M.I. PLUG #42475 WITH 44478 TERMINALS HEADERS #42404, 44068, 43810 AND VERT. HEADER #44474.
6) PHANTOM LINES INDICATE AREAS WHERE TERMINAL STANDOFFS CONTACT P.C. BOARD. NO EXPOSED TRACES OR VIAS ALLOWED NEAR THESE AREAS.
7) A MAXIMUM TOLERANCE OF .050/(1.27) ALLOWS FOR 2 POINTS OF ELECTRICAL CONTACT. A MAXIMUM TOLERANCE OF .020/(.51) ALLOWS FOR 4 POINTS OF CONTACT.
8) .016 IN/IN OR .016 MM/MM MAX. BOW ALLOWABLE AT DATUM -C-
9) IT IS RECOMMENDED TO USE THE 42475 SERIES MATING PART NUMBER WITHOUT TERMINALS TO AID IN PCB INSERTION. INSERT THE 44475 PART INTO THE 42475 PART AND THEN INSERT INTO THE PCB.
10) DIMENSION TO BE USED FOR ALIGNMENT OF CIRCUIT #1 OF MATING CONNECTOR
11) CONNECTOR ASSEMBLIES ARE NOT TO BE MATED OR UNMATED WHILE CIRCUITS ARE LIVE.
12) PARTS NOT DESIGNED FOR CURRENT SHARING.
13) ITEM NUMBERS PRECEEDED BY AN 'X' IN THE CHARTS ON SHEET 3 ARE NOT AVAILABLE.
14) PARTS WILL HAVE 'HCS' MARKING.
15) WHEN THIS PRODUCT IS USED IN A BLIND MATING APPLICATION, THE SYSTEM LEVEL DESIGN MUST INCORPORATE GUIDANCE SO THE CONNECTORS ARE WITHIN THE CAPTURE ENVELOPE (UP TO .100/(2.54) MISALIGNMENT) OF THE FLANGES ON THE HEADER OR PLUG HOUSING AND CAN THUS ALIGN THEMSELVES AS THEY COME TOGETHER. FLOAT IS ALSO REQUIRED IN THE OVERALL DESIGN TO ALLOW THE PCB RECEPTACLE OR ITS MATE TO MOVE INTO A STRESS-FREE POSITION AFTER MATING. IN BOARD TO BOARD APPLICATIONS, ONLY ONE HEADER IS ALLOWED PER P.C. BOARD.
16) PARTS CONFORM TO CLASS 'B' REQUIREMENTS OF COSMETIC SPECIFICATION PS-45499-002.

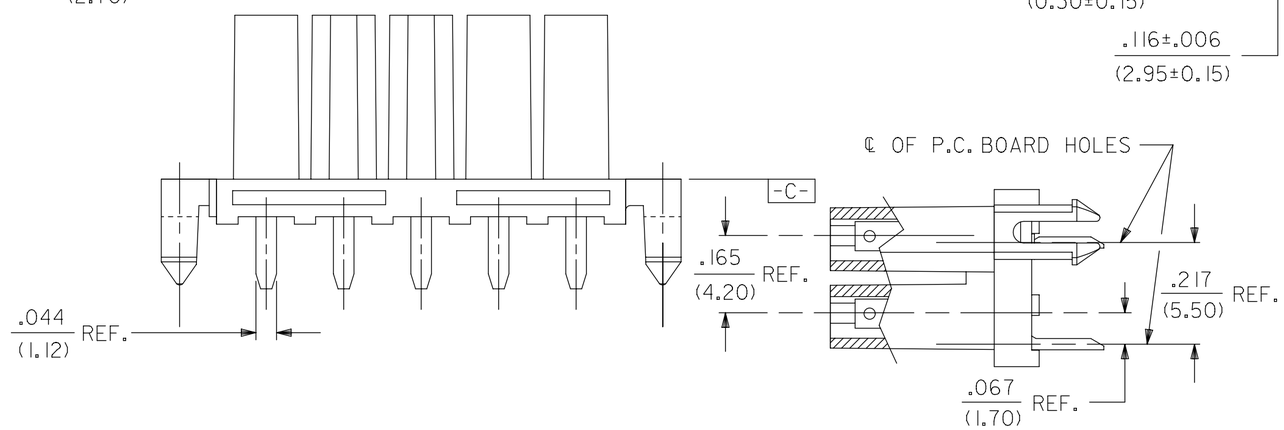

VIEW "A"

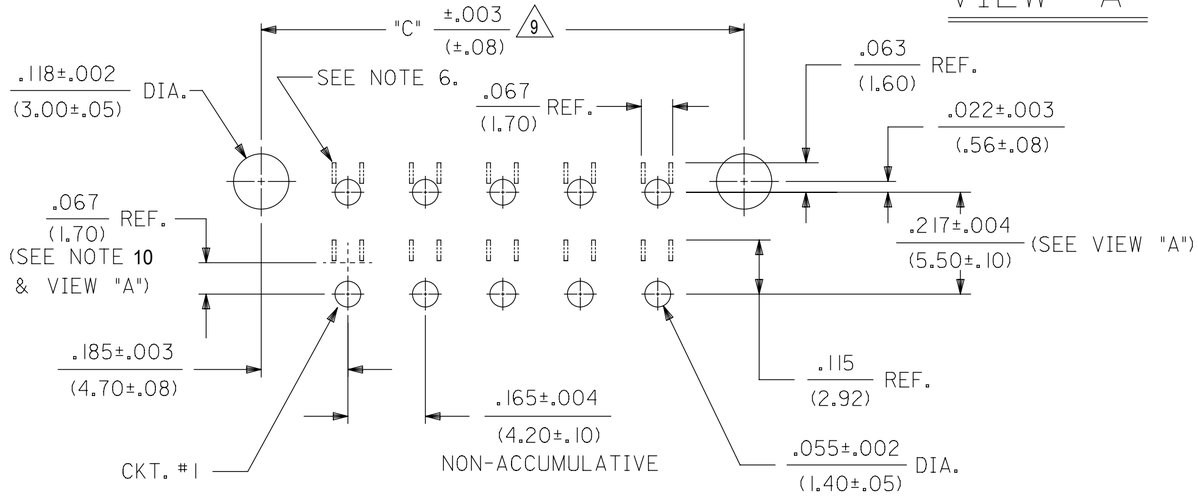

RECOMMENDED HOLE LAYOUT FOR .070/(1.78) MAX. THICK P.C. BOARD

VIEWED FROM COMPONENT SIDE 9

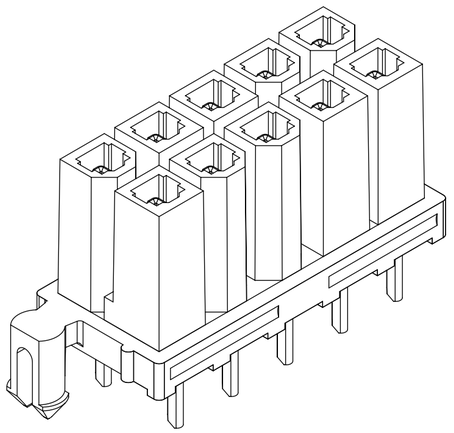

THIS DRAWING CONTAINS INFORMATION THAT IS PROPRIETARY TO MOLEX ELECTRONIC TECHNOLOGIES, LLC AND SHOULD NOT BE USED WITHOUT WRITTEN PERMISSION

DIMENSION UNITS	SCALE
IN/MM	NTS

GENERAL TOLERANCES (UNLESS SPECIFIED)

	MM	INCH
4 PLACES	±	±
3 PLACES	±	± 0.015
2 PLACES	± 0.4	± 0.02
1 PLACE	± 0.5	±
0 PLACES	±	±
ANGULAR TOL	± 3.0 °	

DRAFT WHERE APPLICABLE MUST REMAIN WITHIN DIMENSIONS

CURRENT REV DESC:

EC NO: 771729
DRWN: JERRYW8 2023/11/08
CHK'D: XQZHANG 2023/12/18
APPR: XQZHANG 2023/12/18

INITIAL REVISION:
DRWN: DRAWN BY 0099/99/99
APPR: APPR BY 0099/99/99

THIRD ANGLE PROJECTION | DRAWING: C-SIZE | SERIES: 44475

molex

VERT HEADER RECEPT ASSY
BLIND MATE MINI-FIT HCS SERIES

PRODUCT CUSTOMER DRAWING

DOCUMENT NUMBER	DOC TYPE	DOC PART	REVISION
RSD-44475-001	PSD	000	D6

MATERIAL NUMBER	CUSTOMER	SHEET NUMBER
SEE SHEET 3	GENERAL MARKET	1 OF 3

DOCUMENT STATUS	P1	RELEASE DATE	2023/12/18 09:27:59

FORMAT: Eng-lega-master-lb-prod-C
REVISION: E1
DATE: 2021/05/01

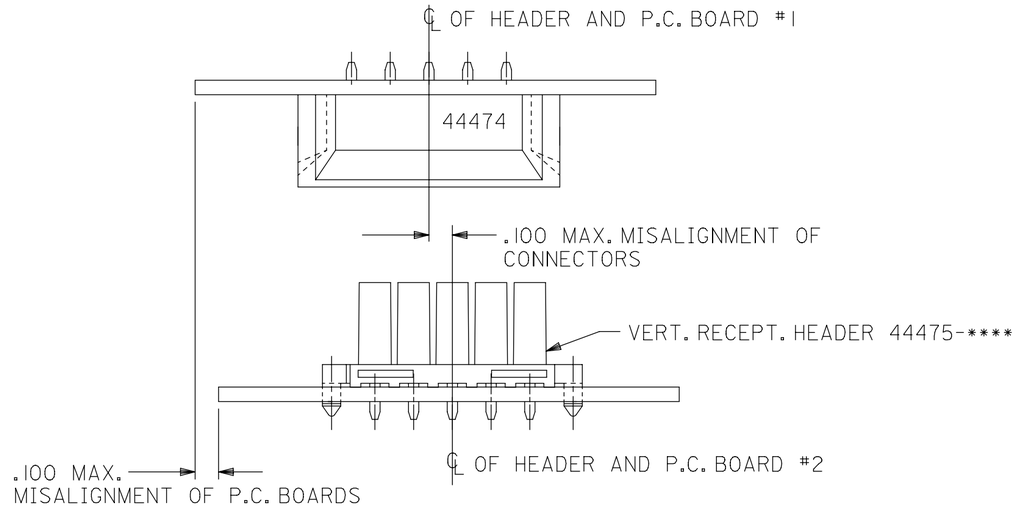

ALIGNMENT TOLERANCES FOR .100 MAX. BOARD-TO-BOARD MISALIGNMENT

(NO CONNECTOR FLOAT)

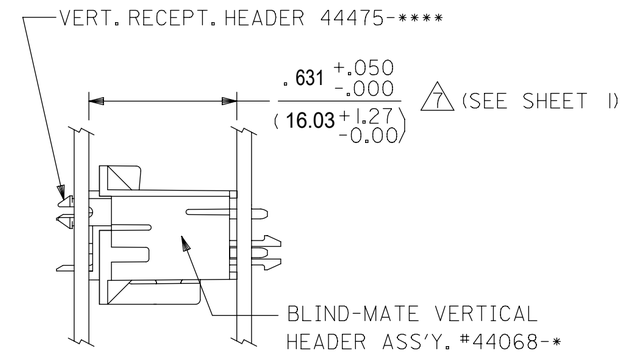

P.C.BOARD-TO-P.C.BOARD APPLICATION #4

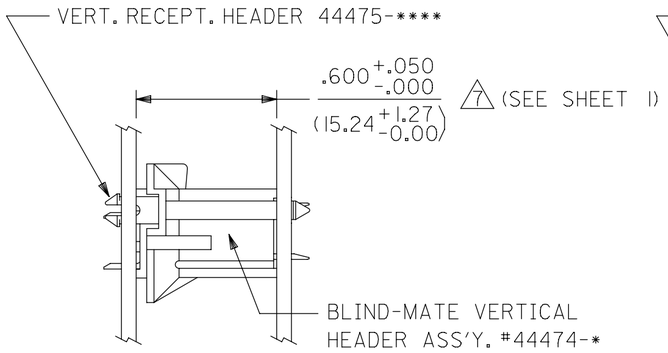

PANEL-TO-P.C.BOARD APPLICATION #1

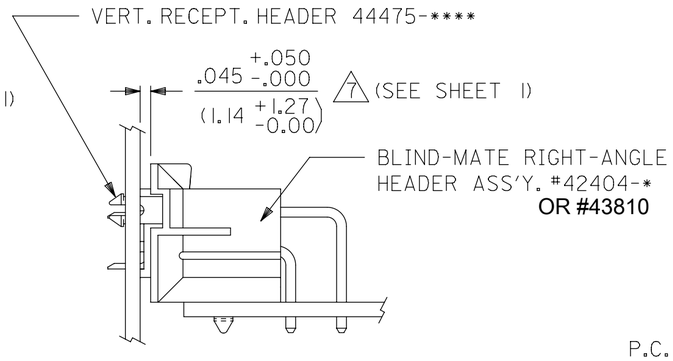

PANEL-TO-P.C.BOARD APPLICATION #2

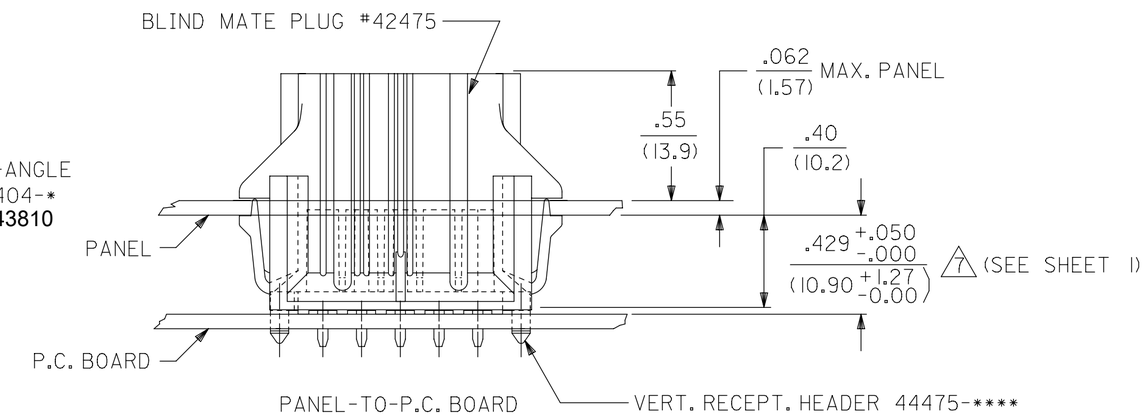

PANEL-TO-P.C. BOARD APPLICATION #3

SEE NOTE 15

THIS DRAWING CONTAINS INFORMATION THAT IS PROPRIETARY TO MOLEX ELECTRONIC TECHNOLOGIES, LLC AND SHOULD NOT BE USED WITHOUT WRITTEN PERMISSION

DIMENSION UNITS	SCALE
IN/MM	NTS

GENERAL TOLERANCES (UNLESS SPECIFIED)

	MM	INCH
4 PLACES	±	±
3 PLACES	±	± 0.015
2 PLACES	± 0.4	± 0.02
1 PLACE	± 0.5	±
0 PLACES	±	±
ANGULAR TOL	± 3.0 °	

DRAFT WHERE APPLICABLE MUST REMAIN WITHIN DIMENSIONS

CURRENT REV DESC:

EC NO: 771729
DRWN: JERRYW8 2023/11/08
CHK'D: XQZHANG 2023/12/18
APPR: XQZHANG 2023/12/18

INITIAL REVISION:
DRWN: DRAWN BY 0099/99/99
APPR: APPR BY 0099/99/99

THIRD ANGLE PROJECTION | DRAWING: C-SIZE | SERIES: 44475

molex

VERT HEADER RECEPT ASSY
BLIND MATE MINI-FIT HCS SERIES

PRODUCT CUSTOMER DRAWING

DOCUMENT NUMBER	DOC TYPE	DOC PART	REVISION
RSD-44475-001	PSD	000	D6

MATERIAL NUMBER	CUSTOMER	SHEET NUMBER
SEE SHEET 3	GENERAL MARKET	2 OF 3

DOCUMENT STATUS	P1	RELEASE DATE	2023/12/18 09:27:59

FORMAT: Eng-lega-master-lb-prod-C
REVISION: E1
DATE: 2021/05/01

	ITEM NUMBER	CKT. SIZE	HOUSIIG MATERIAL	PLATING (SEE NOTE 2)
X	44475-0211	2	94V-2	1
	-0411	4		
	-0611	6		
X	-0811	8		
	-1011	10		
X	-1211	12		
	-1411	14		
X	-1611	16		
	-1811	18		
X	-2011	20		
X	-2211	22		
	44475-2411	24	94V-2	1
X	44475-0221	2	94V-0	1
	-0421	4		
	-0621	6		
X	-0821	8		
	-1021	10		
X	-1221	12		
	-1421	14		
	-1621	16		
	-1821	18		
X	-2021	20		
X	-2221	22		
	44475-2421	24	94V-0	1

	ITEM NUMBER	CKT. SIZE	HOUSIIG MATERIAL	PLATING (SEE NOTE 2)
X	44475-0222	2	94V-0	2
X	-0422	4		
X	-0622	6		
X	-0822	8		
X	-1022	10		
X	-1222	12		
X	-1422	14		
X	-1622	16		
	-1822	18		
X	-2022	20		
X	-2222	22		
X	44475-2422	24	94V-0	2

ITEM. NO.	CKT. SIZE	HSG. MAT'L.	TERMINAL PLATING REQUIRED AT EACH CIRCUIT LOCATION:																							
			1	2	3	4	5	6	7	8	9	10	11	12	13	14	15	16	17	18	19	20	21	22	23	24
44475-3000	24	94V-0	1	1	-	1	-	1	-	1	-	1	1	1	1	1	-	1	-	1	-	1	-	1	1	1

ITEMS PRECEEDED BY "X" ARE NOT AVAILABLE.

THIS DRAWING CONTAINS INFORMATION THAT IS PROPRIETARY TO MOLEX ELECTRONIC TECHNOLOGIES, LLC AND SHOULD NOT BE USED WITHOUT WRITTEN PERMISSION

DIMENSION UNITS: IN/MM
SCALE: NTS

GENERAL TOLERANCES (UNLESS SPECIFIED)

	MM	INCH
4 PLACES	±	±
3 PLACES	±	± 0.015
2 PLACES	± 0.4	± 0.02
1 PLACE	± 0.5	±
0 PLACES	±	±
ANGULAR TOL	± 3.0 °	

DRAFT WHERE APPLICABLE MUST REMAIN WITHIN DIMENSIONS

CURRENT REV DESC:

EC NO: 771729
DRWN: JERRYW8 2023/11/08
CHK'D: XQZHANG 2023/12/18
APPR: XQZHANG 2023/12/18

INITIAL REVISION:
DRWN: DRAWN BY 0099/99/99
APPR: APPR BY 0099/99/99

THIRD ANGLE PROJECTION | DRAWING: C-SIZE | SERIES: 44475

molex

VERT HEADER RECEPT ASSY
BLIND MATE MINI-FIT HCS SERIES

PRODUCT CUSTOMER DRAWING

DOCUMENT NUMBER	DOC TYPE	DOC PART	REVISION
RSD-44475-001	PSD	000	D6

MATERIAL NUMBER	CUSTOMER	SHEET NUMBER
SEE SHEET 3	GENERAL MARKET	3 OF 3

DOCUMENT STATUS	P1	RELEASE DATE	2023/12/18 09:27:59

FORMAT: Eng-tega-master-lb-prod-C
REVISION: E1
DATE: 2021/05/01