Jul.1.2019 Copyright 2019 HIROSE ELECTRIC CO., LTD. All Rights Reserved.
In case of consideration for using Automotive equipment / device which demand high reliability, kindly contact our sales window correspondents.

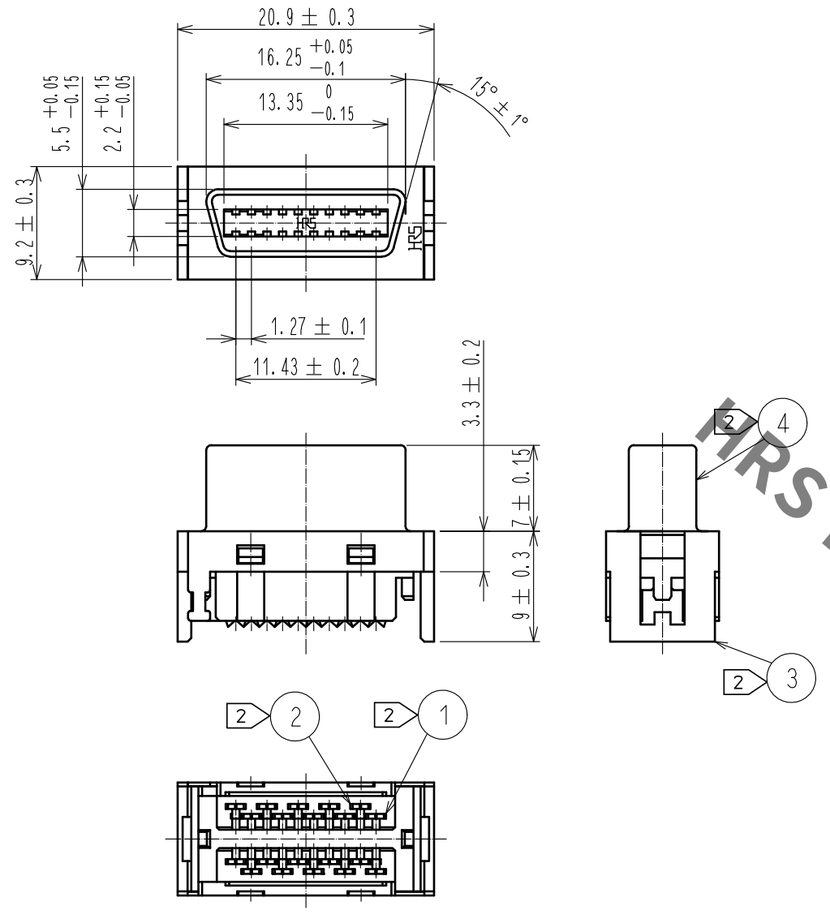

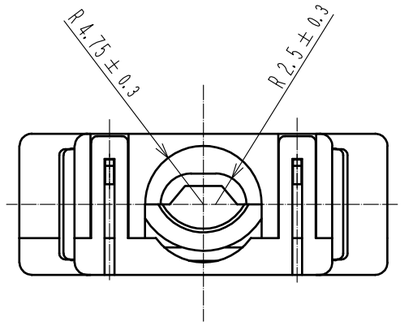

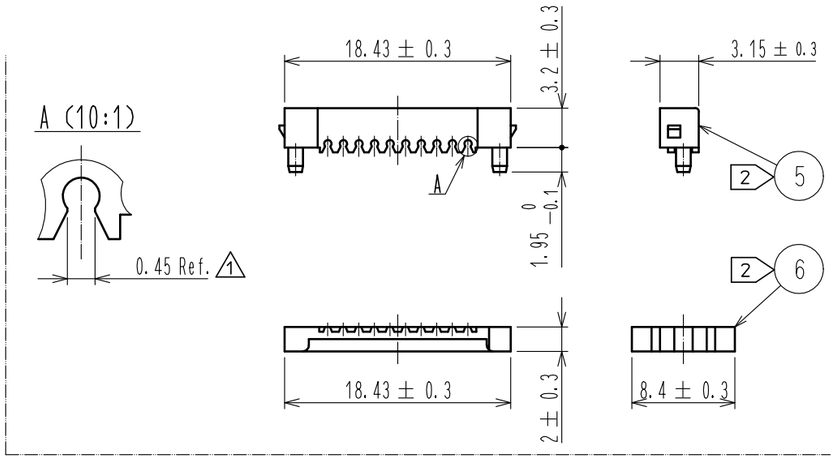

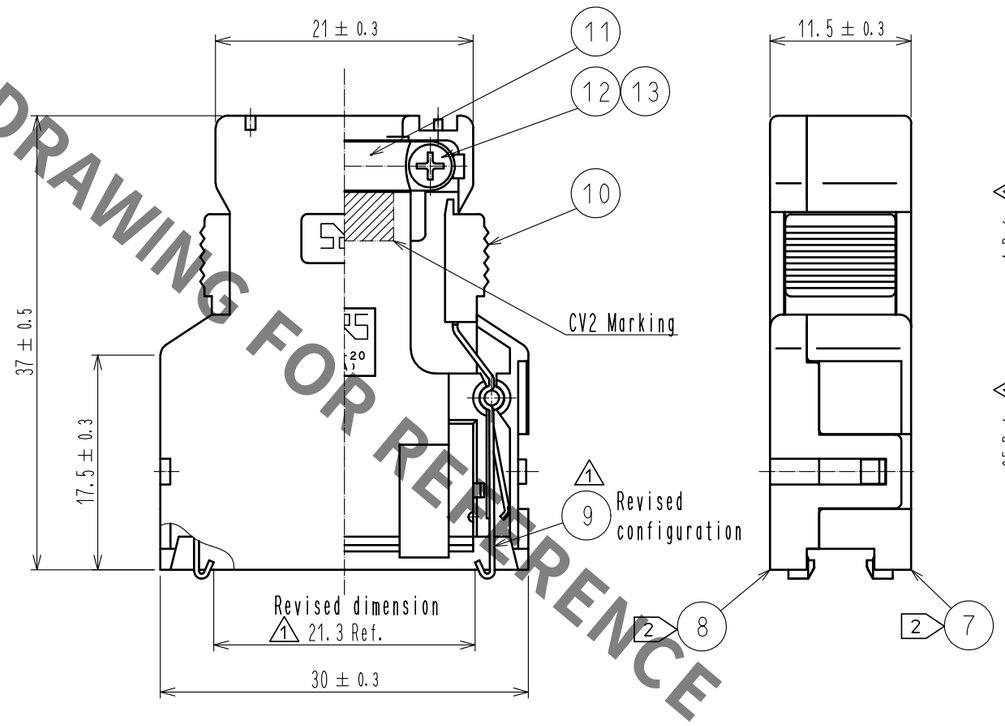

HRS DRAWING FOR REFERENCE

Assembled figure 1

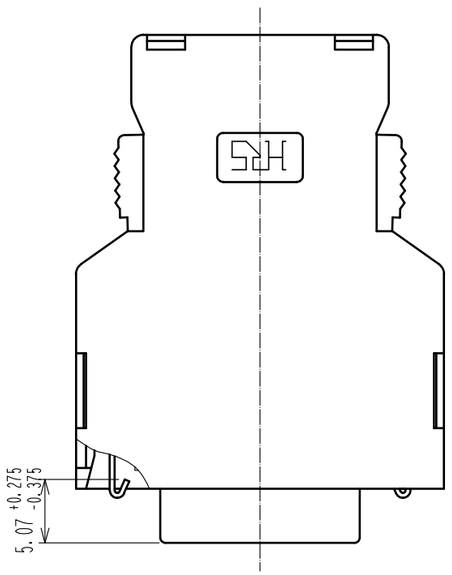

1 Note
1. Outer surface of cover case part no. ⑦ and ⑧ are matte finished equivalent to TH-117 (Tanazawa hakkosha Co.,Ltd.). Except around the ditch of HRS mark.
2 Part no. ①,②,③,④ are assembled together as a unit. Part no. ⑤,⑥,⑦,⑧ and the unit are not assembled when delivered.
3. Outer diameter of applicable cable shall be φ6±0.5.

NO.	MATERIAL	FINISH , REMARKS	NO.	MATERIAL	FINISH , REMARKS
4	Steel	Over : Nickel plating 1μm min. Under : Copper plating 5μm min.	13	Brass	Nickel plating 0.8μm min.
			12	Brass	Nickel plating 0.8μm min.
3	PBT	Black. UL94V-0	11	Stainless steel	
2	Phosphor bronze	Contact area : Gold plating 0.3μm min. Lead : Gold plating 0.03μm min. Under : Nickel plating 2μm min.	10	PC	Gray. UL94V-0
			9	Stainless steel	
			8	PC	Gray. UL94V-0
1	Phosphor bronze	Contact area : Gold plating 0.3μm min. Lead : Gold plating 0.03μm min. Under : Nickel plating 2μm min.	7	PC	Gray. UL94V-0
			6	PBT	Black. UL94V-0
			5	PBT	Black. UL94V-0

UNITS	SCALE		COUNT	DESCRIPTION OF REVISIONS	DESIGNED	CHECKED	DATE
mm	2 : 1	1	7	DIS-E-00001670	P. EKSOURIYA	AH. KODAMA	18. 07. 13

HRS HIROSE ELECTRIC CO., LTD.

APPROVED	: AH. KODAMA	18. 06. 11
CHECKED	: AH. KODAMA	18. 06. 11
DESIGNED	: MO. SHIMOYAMA	18. 06. 11
DRAWN	: SJ. SATO	18. 06. 11

DRAWING NO. EDC-045981-50-01
PART NO. FI30-20S-CV2(50)
CODE NO. CL230-0509-6-50 1 1/1

FORM HC0011-5-7

Mouser Electronics

Authorized Distributor

Click to View Pricing, Inventory, Delivery & Lifecycle Information:

Hirose Electric:
FI30-20S-CV2(50)