KYCON, Inc. 1810 Little Orchard Street, San Jose, CA 95125 (408)494-0330

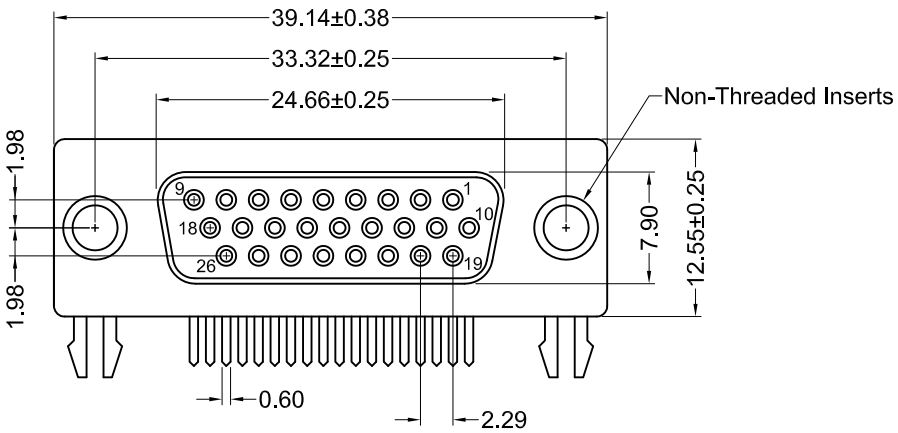

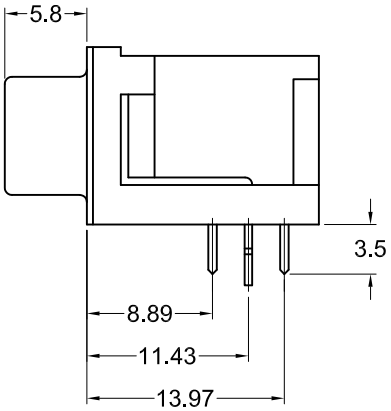

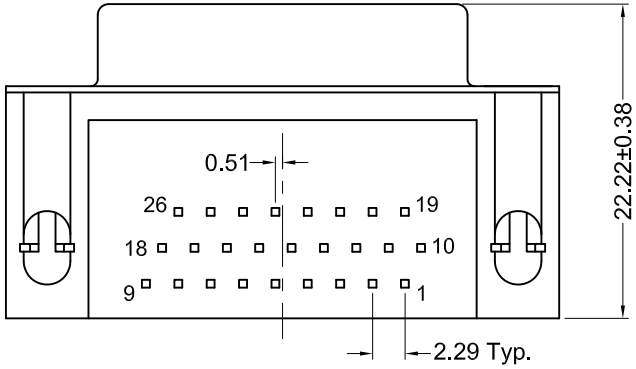

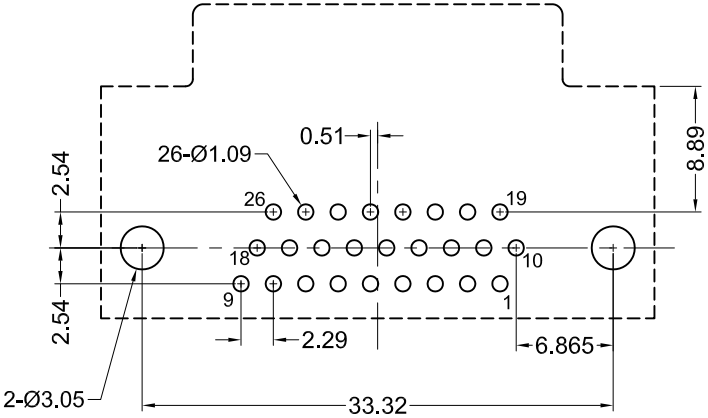

Recommended PCB Layout
(Bottom View)

Material and Finish

Shell: Steel, tin plated

Insulator: PBT thermoplastic with glass-fiber reinforcement, UL94V-0 rated
Color: Black

Contact Material:
Socket - Phosphor Bronze

Contact Plating Options:

Standard: gold flash on mating end, tin on termination end, nickel underplate on entire contact

15 Option: 15u" gold on mating end, tin on termination end, nickel underplate on entire contact

30 Option: 30u" gold on mating end, tin on termination end, nickel underplate on entire contact

Electrical Specifications

Rated Current: 1.5A

Rated Voltage: 30Vac

Insulation Resistance:
more than 1000 megohms at 500V DC

Contact Resistance:
13 milliohms max.

Dielectric Strength:
1000V for 1 minute

Durability Rating:
500 mating cycles min.

Operating Temperature:
-55°C to +75°C

Part Number	Contact Area Plating Finish
K66X-A26S-NT	Gold Flash (standard)
K66X-A26S-NT15	15u" Gold (15 option)
K66X-A26S-NT30	30u" Gold (30 option)

RoHS COMPLIANT

E140125 LR78160

Tolerances
X.X ± 0.25
X.XX ± 0.15
Unless Stated Otherwise

REV.	DATE	DESCRIPTION	REV. BY	CHK. BY
A1	12/11/08	New Drawing	S. Vien	H. MA
A2	06/12/14	ECO#14-027	H. MA	P. DalCanto

DRAWN BY	DATE
S. Vien	07/08/08
	UNITS
	mm

K66X-A26S-NT

HD, D-Sub, 26 Pos. Female, RoHS Compliant

Non-Threaded Inserts, Board Locks

KYCON