REVISIONS					
REV.	ECN NO.	LOCATION	DESCRIPTION	DATE	DESIGN
A0	N/A		INITIAL RELEASE	/	/
A1	N/A		图面升级整理图面	2025.05.06	阿树

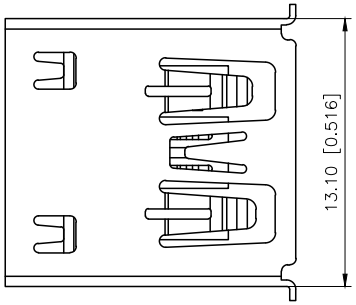

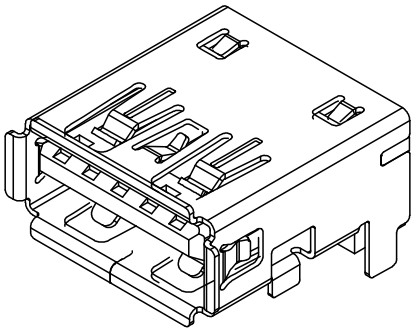

Material
Housing Material: LCP, UL94V-0, blue
Contact Terminal: Brass
Metallic Shell:SPCC
Plating
Underplating: Nickel
Contact Plating: G/F μ" Gold
Solder Tail: 100μ" Min. Tin
Metallic Shell: Nickel
Electrical
Voltage Rating: 30 VAC RMS
Current Rating: 1.5AMP
Contact Resistance: 30MILLIOHMS Max.
Insulation resistance: 100MEGOHMS Min@500V DC
Withstanding voltage: 500 VAC RMS 50(60)Hz,1MIN
Mechanical
Durability: 1500 cycles
Mating Force: 35N Max
Unmating Force: 5~35N
Environmental
Storage Temperature : -40 ~+85
Operating Temperature: -25 ~+70

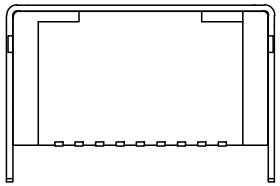

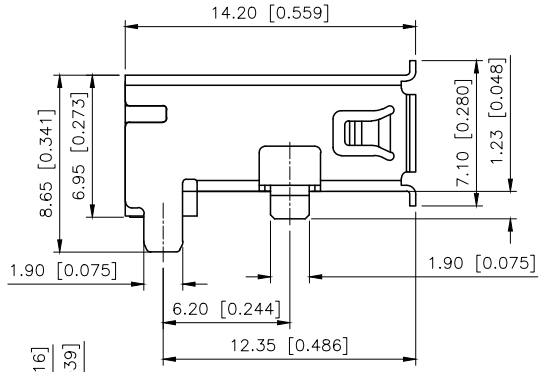

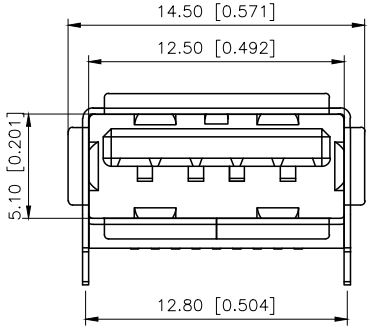

U231-09XN-4BLRA00-S

1:Au 1U"
5:Au 15U"
6:Au 30U"

S:Scrolls

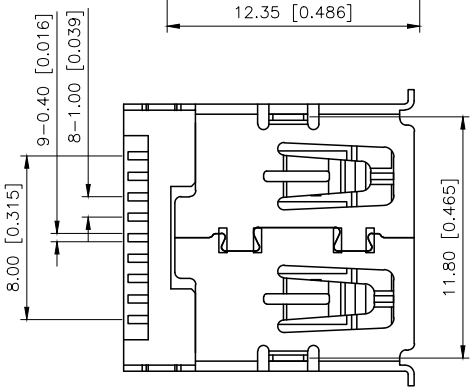

Scrolls

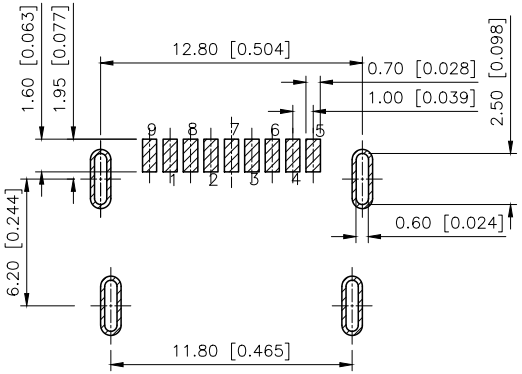

RECOMMEND PCB LAYOUT(±0.05)

Pin #	SIGNAL NAME	DESCRIPTION	MATING SEQUENCE
1	VBUS	POWER	SECOND
2	D-	USB 2.0 DIFFERENTIAL PAIR	THIRD
3	D+		
4	GND	GROUND FOR POWER RETURN	SECOND
5	StdA_SSRX-	SUPERSPEED RECEIVER DIFFERENTIAL PAIR	LAST
6	StdA_SSRX+		
7	GND_DRAIN	GROUND FOR SIGNAL RETURN	
8	StdA_SSTX-	SUPERSPEED TRANSMITTER DIFFERENTIAL PAIR	
9	StdA_SSTX+		
Shell	Shield	CONNECTOR METAL SHELL	FRIST

AuGLAR	±5°
X.	±0.40
X.x	±0.30
X.xx	±0.20
X.xxx	±0.15
UNSPECIFIED TOLERAuCES	

XKB Connection

DESIGN	阿树	VIEW:	MODEL TYPE: USB 3.0
CHECKED		UNIT: mm/in	PART NO.: U231-09XN-4BLRA00-S
APPROVED		SIZE: A4	DWG NO.:

XKB INDUSTRIAL PRECISION CO.,LIMITED

SCALE	PAGE	REVISION
N/A	1/1	A1