| REV | ECN NO | DESRIPTION | DESIGN | APPROVAL | DATE |
|---|---|---|---|---|---|
| A1 | NEW | Replace frame | | | 2020.06.12 |

ROHS

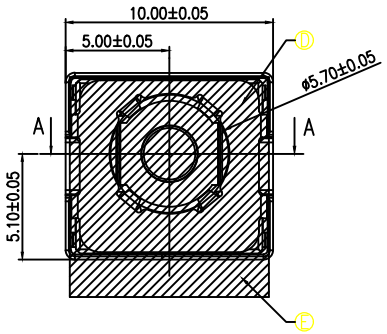


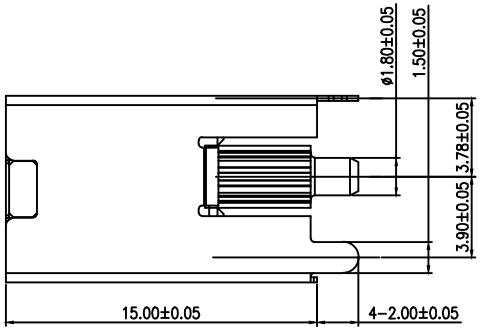


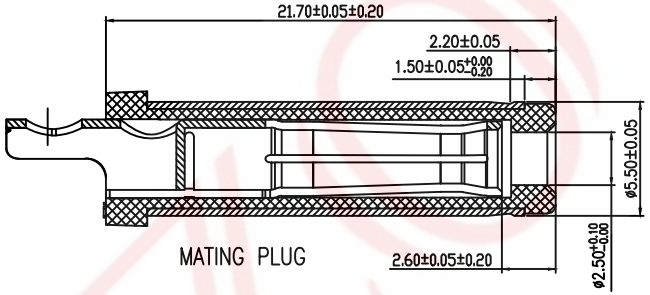


MATING PLUG

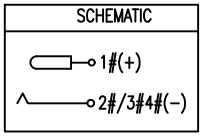


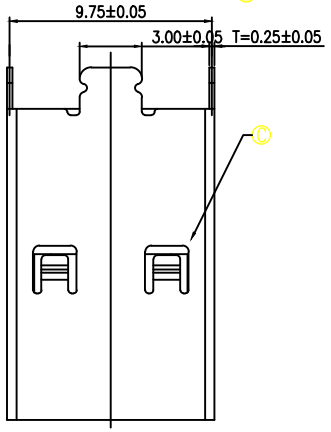


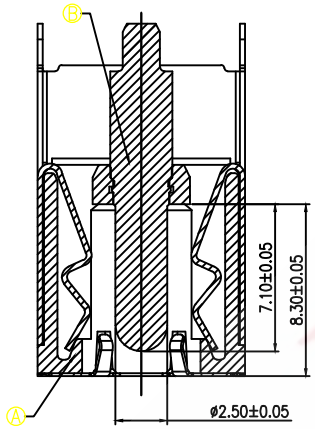


SECTION A-A

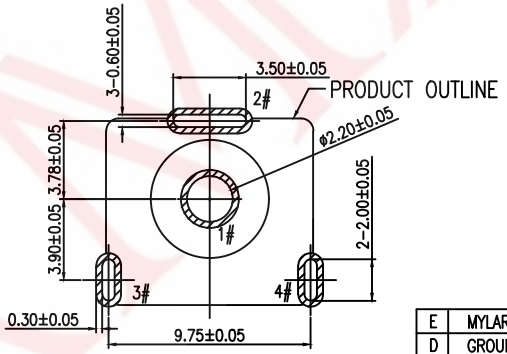


RECOMMENDED PCB LAYOUT

TOP VIEW TOLERANCE:±0.05

SPECIFICATION:

1. RATING: DC 20V 20A
2. CONTACT RESISTANCE:
   30mΩ MAX.(INITIAL)
   50mΩ MAX.(FINAL)
3. INSULATION RESISTANCE: 100 MΩ MIN.
4. WITHSTAND VOLTAGE: 500 VAC
5. INSERTION FORCE: 3N~30N
6. EXTRACTION FORCE: 3N~30N
7. DURABILITY: 5,000 CYCLES

9C L 4 150 B E G A

- Model Definition
- Mould Number: MX1078
- Needle Diameter: 2.5mm
- Fixing Method: Without Fixed Column
- Interface Method: Conventional Flared Opening
- Overall Length: 15.0mm
- Pin Position: 4 Pins
- Mounting Method: Vertical (DIP)
- Product Series: DC Power Jacks

| NO. | DESCRIPTION | MATERIAL | REMARKS | QTY |
|---|---|---|---|---|
| E | MYLAR | | | 1 |
| D | GROUND | SUS 304 | | 1 |
| C | SHELL | COPPER ALLOY | Ni 40u"MIN. | 1 |
| B | CENTER PIN | BRASS | GOLD FLASH/Ni 40u" MIN. | 1 |
| A | HOUSING | HIGH TEMP.THERMOPLASTIC | BLACK | 1 |

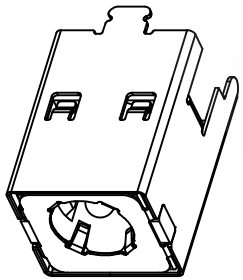

3D VIEW

| | | | | |
|---|---|---|---|---|
| | | | GENERAL TOLERANCE | |
| | | | ≥0~2< | ±0.15 |
| DESIGN | WANGGUIFA | 2018.06.12 | ≥2~5< | ±0.25 |
| CHECKED | ZHENGUILAN | 2018.06.12 | ≥0~2< | ±0.15 |
| APPROVED | LILIANJIANG | 2018.06.14 | ≥5 | ±0.35 |

FIRST VIEW

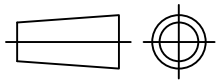

| SCALE | 1:1 | UNIT | mm |
|---|---|---|---|

The copyright belongs to samzo parts [China] Co., Ltd. please use the material after samzo parts agree to authorize. The final right of interpretation belongs to samzo parts.
WWW.KKK-JP.COM

SAMZO COMPONENTS

Electronic switch and connector manufacturer

TITLE:: 20A大电流 立式插件

DWG NO: 9CL4150-A1078

PART NO: 9CL4-55251078

MODEL NO: 9CL4150BEGA

NAME: DC JACK