Jun.1.2024 Copyright 2024 HIROSE ELECTRIC CO., LTD. All Rights Reserved.
In case of consideration for using Automotive equipment / device which demand high reliability, kindly contact our sales window correspondents.

	COUNT	DESCRIPTION OF REVISIONS	BY	CHKD	DATE		COUNT	DESCRIPTION OF REVISIONS	BY	CHKD	DATE
1	3	RE-F-06522	J.M		99.9.7						. .
					. .						. .
					. .						. .

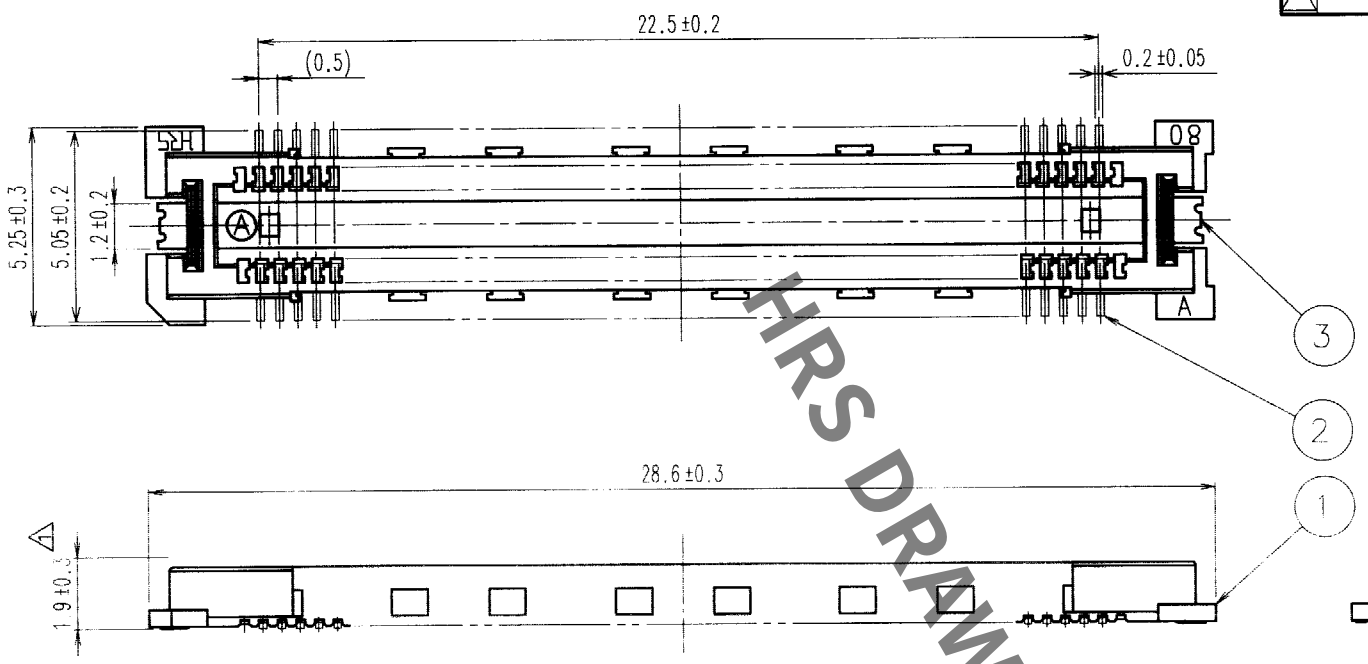

1 (REVISED CONFIGURATION)

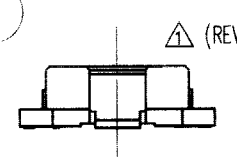

RECOMMENDED LAND PATTERN DIMENSION OF PCB

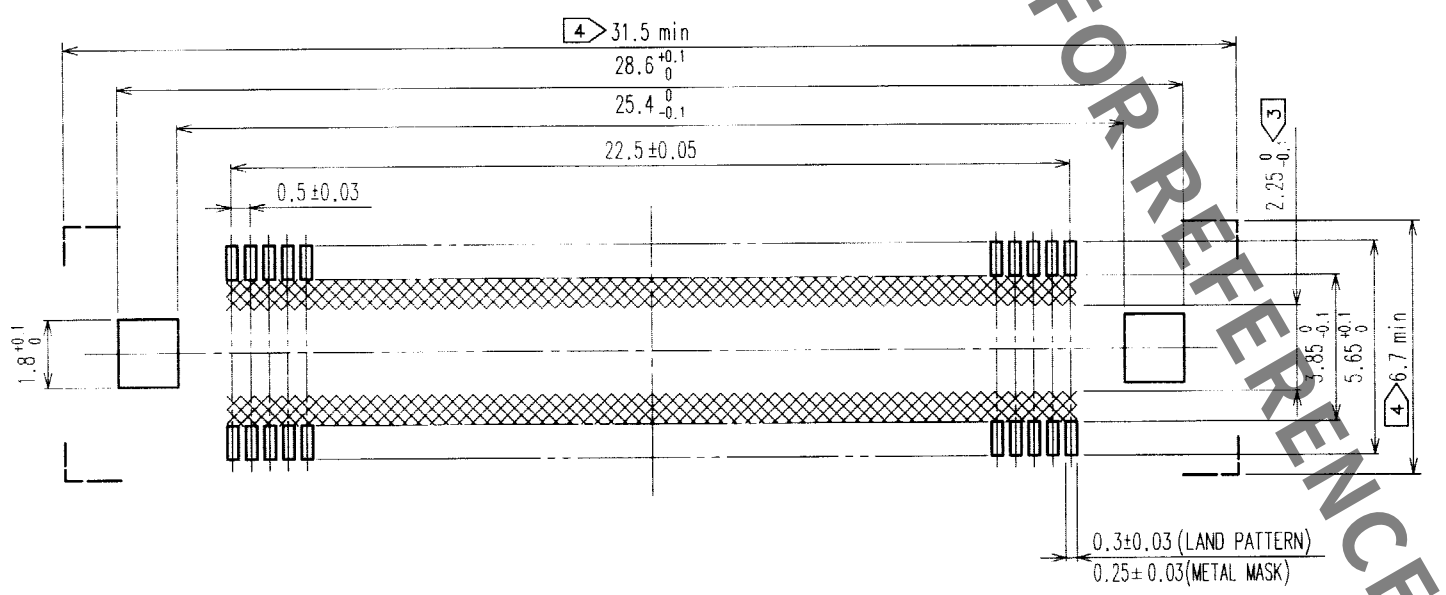

1 SIGNAL PORTION CROSS SECTION (10 : 1)

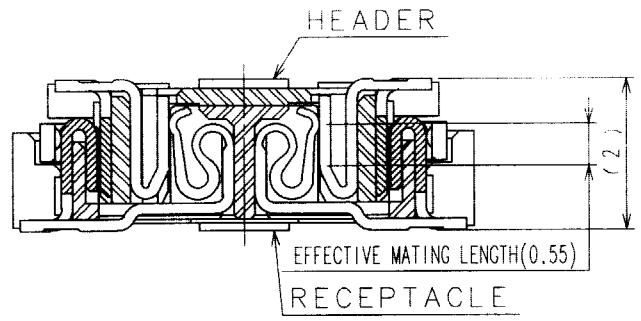

NO.	MATERIAL	FINISH, REMARKS	NO.	MATERIAL	FINISH, REMARKS
2	COPPER ALLOY	CONTACT AREA:GOLD (0.1μm) OVER NICKEL LEAD:GOLD FLASH OVER NICKEL			
1	LCP	BEIGE UL94V-0	3	PHOSPHOR BRONZE	TIN PLATED

NOTES
1. SMT LEAD-COPLANARITY:0.1 MAX.
2. THIS PRODUCT HAS NO POLARITY TO PATTERN FOR MOUNTING.
3. MAKE SURE WIDTH OF PATTERN IS WITHIN THAT OF LAND ,OR LEAD MAY TOUCH PATTERN. (THIS APPLIES TO HATCHED AREA.)
4. DO NOT MOUNT OTHER DEVICES ONTO [ ] AREA ,OR MATING PAIR CANNOT BE MATED.

CODE NO. (OLD)	DRAWN	DESIGNED	CHECKED	APPROVED	RELEASED
CL	S.Kitajima 990525	J.Matsukawa 990525	M.Ishida 990526	Y.Yoshimura 990526	

SCALE 5 : 1
UNITS mm

DRAWING NO. EDC3-152105

HRS HIROSE ELECTRIC CO.,LTD.

PART NO. FX11LB-92P-SV

CODE NO. CL573-0053-8

1/1

FORM NO.229

TO
PCK

FOR REFERENCE