© 2023 TE Connectivity. All Rights Reserved.

REVISIONS					
P	LTR	DESCRIPTION	DATE	DWN	APVD
	A1	NEW DRAWING	29AUG2023	ASB	JDB
	J1	DRAWING RE-CREATED IN CREO	28DEC2023	ASB	JDB
	J2	REEL CORE DIA CHANGE	23JUL2024	SS	LET

TAPE ON REEL PACKAGING ACCORDING TO DIN IEC 60286-3
PACKAGING UNIT: 100 PCS

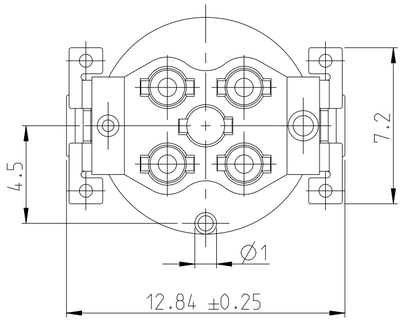

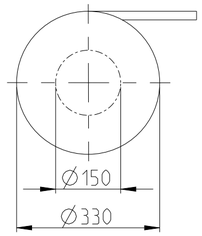

TRAY PACKAGING: PACKAGING UNIT 50 PCS

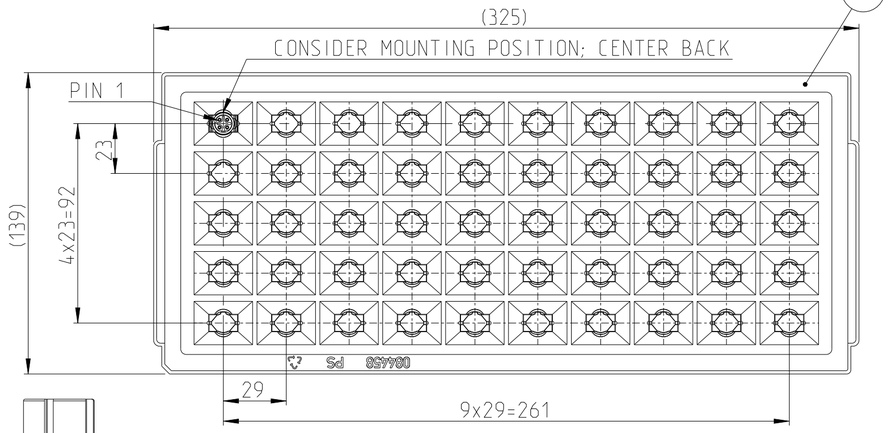

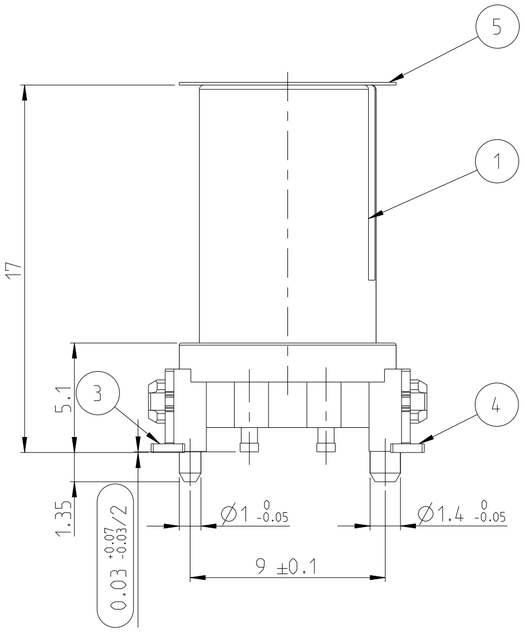

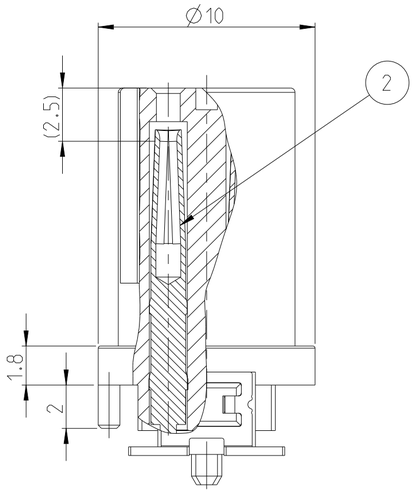

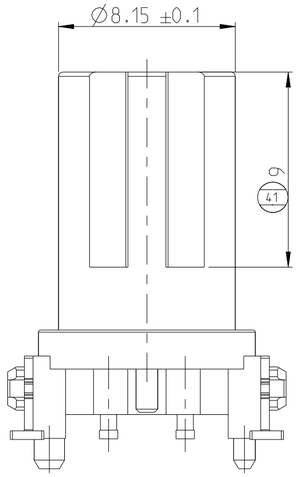

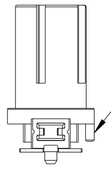

CONSIDER MOUNTING POSITION; PEG RIGHT

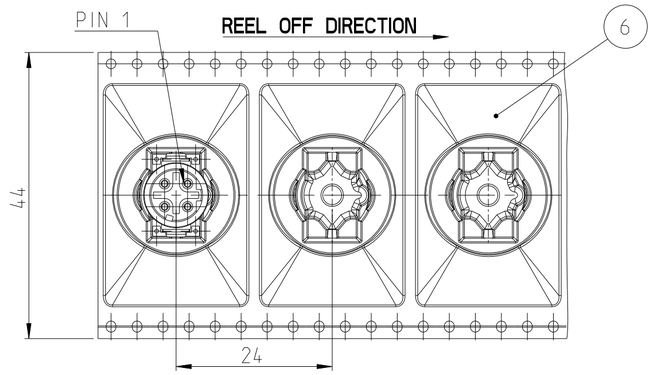

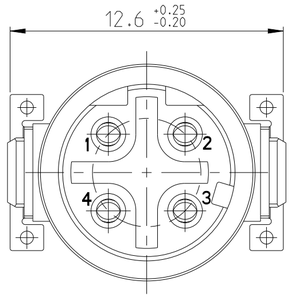

PCB-LAYOUT PROPOSAL

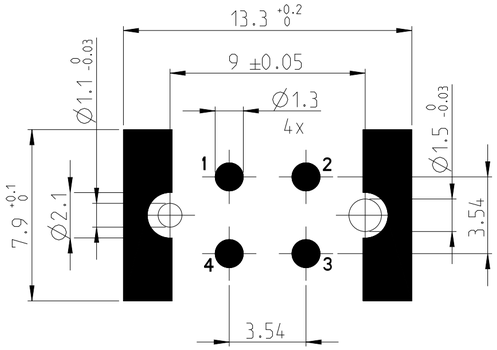

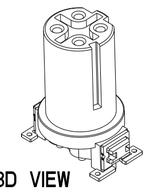

3D VIEW
SCALE 2:1

474665-E	364175-E	454466-E	REV	DESCRIPTION	ITEM NO.
		OBSOLETE			
-	-	1	-	TOP COVER	8
-	-	1	-	TRAY PACKAGING	7
1	1	-	-	TAPE & REEL	6
1	-	-	-	PAD	5
1	1	1	-	SOLDER CLIP LEFT	4
1	1	1	-	SOLDER CLIP RIGHT	3
4	4	4	-	PINS	2
1	1	1	-	HOUSING	1
-	-	-	REV OF EACH ASSY NO. (WHEN BLANK, USE DWG. REV)		
QTY			PARTS LIST		

V=TURNED CONTACT (PCB SIDE CAN BE USED WITH POTTED COMPOUND)

INSPECTION LEVEL 1: CONTROL CHART REQUIRED
/1 PROOF OF PROCESS CAPABILITY OR 100% TEST IF PROCESS CAPABILITY IS NOT ACHIEVED

INSPECTION LEVEL 2 AND 3: CONTROL CHART REQUIRED
/2 PROOF OF MEAN VALUE, STANDARD DEVIATION AND MACHINE CAPABILITY

/3 PROOF OF VALUES OR PROOF OF ATTRIBUTIVE TEST

INFORMATION ON THE SCOPE OF TESTING AND DETECTION BY ERNI VA 7.3.2.3

1. DRAWING SPECIFICATION ACCORDING TO DOCUMENT 5_3_16-DOC-1806-00915

2. COPLANARITY OF ALL CLIPS ≤ 0.1MM

THIS DRAWING IS A CONTROLLED DOCUMENT.

DIMENSIONS: mm

TOLERANCES UNLESS OTHERWISE SPECIFIED: ISO 2768-mK ISO 8015
0 PLC ±
1 PLC ±
2 PLC ±
3 PLC ±
4 PLC ±
ANGLES ±

MATERIAL - -

FINISH -

DWN B S ADRUSH 11AUG2023
CHK M SZELAG 13AUG2023
APVD J DE BRUIJN 13AUG2023
PRODUCT SPEC 108-94887
APPLICATION SPEC 114-94781
WEIGHT -

TE Connectivity

NAME M12 FEMALE, D CODE, 4P, 17MM SMT V

-

SIZE A2 | CAGE CODE 00779 | DRAWING NO C-454466-E | RESTRICTED TO -

CUSTOMER DRAWING | SCALE 5:1 | SHEET 1 OF 1 | REV J2

1471-9 (3/13)