TPS51604-Q1 Synchronous Buck FET Driver for High-Frequency CPU Core Power in Automotive Applications

1 Features

- Qualified for Automotive Applications
- AEC-Q100 Qualified With the Following Results:
  - Device Temperature Grade 1: –40°C to 125°C
  - Device Human Body Model ESD Classification Level H2
  - Device Charged Device Model ESD Classification Level C3B
- Reduced Dead-Time Drive Circuit for Optimized CCM
- Automatic Zero Crossing Detection for Optimized DCM Efficiency
- Multiple Low-Power Modes for Optimized Light-Load Efficiency
- Optimized Signal Path Delays for High-Frequency Operation
- Integrated BST Switch Drive Strength Optimized for Ultrabook FETs
- Optimized for 5-V FET Drive
- Conversion Input Voltage Range (V_{IN}): 4.5 to 28 V
- 2-mm × 2-mm, 8-Pin, WSON Power-Pad Package

2 Applications

- Automotive Rear Seat Entertainment (RSE) Tablets Using High-Frequency CPUs With the Following Power Input:
  - Adapter
  - Battery
  - NVDC
  - 5-V or 12-V Rails

3 Description

The TPS51604-Q1 drivers are optimized for high-frequency CPU V_{CORE} applications. Advanced features such as reduced dead-time drive and auto zero crossing are used to optimize efficiency over the entire load range.

The $\overline{SKIP}$ pin provides immediate CCM operation to support controlled management of the output voltage. In addition, the TPS51604-Q1 supports two low-power modes. With the PWM input in 3-state, quiescent current is reduced to 130 µA, with immediate response. When $\overline{SKIP}$ is held at 3-state, the current is reduced to 8 µA (typically 20 µs is required to resume switching). Paired with the appropriate TI controller, the drivers deliver an exceptionally high performance power supply system.

The TPS51604-Q1 device is packaged in a space saving, thermally-enhanced 8-pin, 2-mm x 2-mm WSON package and operates from –40°C to 125°C.

Device Information(1)

PART NUMBER	PACKAGE	BODY SIZE (NOM)
TPS51604-Q1	WSON (8)	2.00 mm × 2.00 mm

(1) For all available packages, see the orderable addendum at the end of the data sheet.

Simplified Schematic

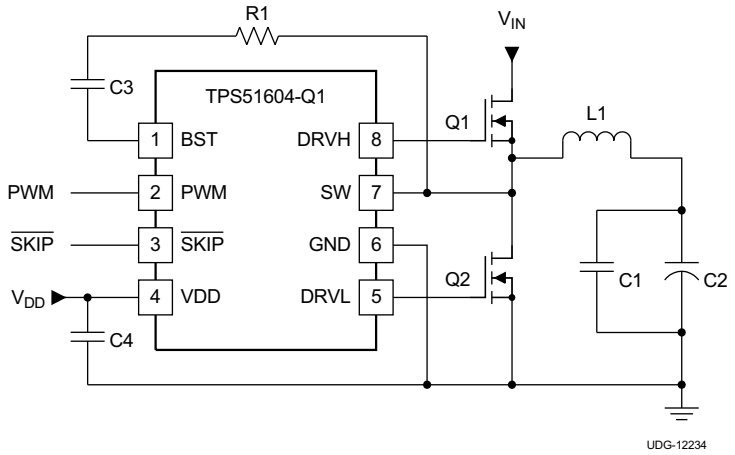

An IMPORTANT NOTICE at the end of this data sheet addresses availability, warranty, changes, use in safety-critical applications, intellectual property matters and other important disclaimers. PRODUCTION DATA.

Table of Contents

1 Features ... 1
2 Applications ... 1
3 Description ... 1
4 Revision History ... 2
5 Pin Configuration and Functions ... 3
6 Specifications ... 4
6.1 Absolute Maximum Ratings ... 4
6.2 Handling Ratings ... 4
6.3 Recommended Operating Conditions ... 4
6.4 Thermal Information ... 4
6.5 Electrical Characteristics ... 5
6.6 Typical Characteristics ... 7
6.7 Typical Power Block MOSFET Characteristics ... 9
7 Detailed Description ... 10
7.1 Overview ... 10
7.2 Functional Block Diagram ... 10
7.3 Feature Description ... 10
8 Layout ... 14
8.1 Layout Guidelines ... 14
9 Device and Documentation Support ... 15
9.1 Trademarks ... 15
9.2 Electrostatic Discharge Caution ... 15
9.3 Glossary ... 15
10 Mechanical, Packaging, and Orderable Information ... 15

4 Revision History

Changes from Original (January 2014) to Revision A — **Page**

- Added *Handling Ratings* table, *Feature Description* section, *Layout* section, *Device and Documentation Support* section, and *Mechanical, Packaging, and Orderable Information* section ... 1
- Updated device name in *Thermal Information* ... 4
- Corrected temperature range for *Electrical Characteristics* specifications from 105°C to 125°C ... 5
- Corrected temperature range for *Electrical Characteristics* specifications from 105°C to 125°C ... 6

Copyright © 2014, Texas Instruments Incorporated

5 Pin Configuration and Functions

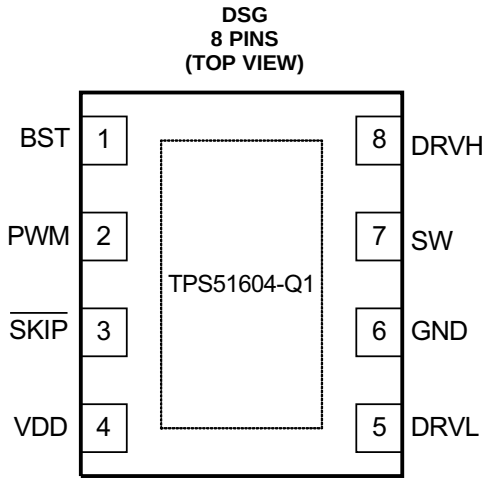

Pin Functions

PIN		I/O (1)	DESCRIPTION
NAME	NO.		
BST	1	I	High-side N-channel FET bootstrap voltage input; power supply for high-side driver
DRVH	8	O	High-side N-channel gate drive output
DRVL	5	O	Synchronous low-side N-channel gate drive output
GND	6	—	Synchronous low-side N-channel gate drive return and IC reference
PWM	2	I	PWM input. A tri-state voltage on this pin turns OFF both the high-side (DRVH) and low-side drivers (DRVL)
$\overline{\text{SKIP}}$	3	I	When $\overline{\text{SKIP}}$ is LO, the zero crossing comparator is active; the power chain enters discontinuous conduction mode when the inductor current reaches zero. When $\overline{\text{SKIP}}$ is HI, the zero crossing comparator is disabled, and the driver outputs follow the PWM input. A tri-state voltage on $\overline{\text{SKIP}}$ puts the driver into a very-low power state.
SW	7	I/O	High-side N-channel gate drive return. Also, zero-crossing sense input
Thermal Pad		—	Tie to system GND plane with multiple vias
VDD	4	I	5-V power supply input; decouple to GND with a ceramic capacitor with a value of 1 µF or greater

(1) I = Input, O = Output

Copyright © 2014, Texas Instruments Incorporated

6 Specifications

6.1 Absolute Maximum Ratings[(1) (2)]

over operating free-air temperature (unless otherwise noted)

		MIN	MAX	UNIT
Input voltage	VDD	–0.3	6	V
	PWM, $\overline{SKIP}$	–0.3	6	
Output voltage	BST	–0.3	35	V
	BST (transient <20 ns)	–0.3	38	
	BST to SW; DRVH to SW	–0.3	6	
	SW	–2	30	
	DRVH, SW (transient <20 ns)	–5	38	
	DRVL	–0.3	6	
Ground pins	GND to PAD	–0.3	0.3	V
Operating junction temperature, T_J		–40	125	°C

(1) Stresses beyond those listed under *Absolute Maximum Ratings* may cause permanent damage to the device. These are stress ratings only and functional operation of the device at these or any other conditions beyond those indicated under *Recommended Operating Conditions* is not implied. Exposure to absolute-maximum-rated conditions for extended periods may affect device reliability.
(2) All voltage values are with respect to the network ground terminal unless otherwise noted.

6.2 Handling Ratings

			MIN	MAX	UNIT
T_{stg}	Storage temperature range		–55	150	°C
$V_{(ESD)}$	Electrostatic discharge	Human body model (HBM), per AEC Q100-002[(1)]	–2	2	kV
		Charged device model (CDM), per AEC Q100-011	–750	750	V

(1) AEC Q100-002 indicates HBM stressing is done in accordance with the ANSI/ESDA/JEDEC JS-001 specification.

6.3 Recommended Operating Conditions

Over operating free-air temperature range (unless otherwise noted)

		MIN	TYP	MAX	UNIT
Input voltage	VDD	4.5	5	5.5	V
	PWM, $\overline{SKIP}$	–0.1		5.5	
Output voltage	BST	–0.1		34	V
	BST to SW; DRVH to SW	–0.1		5.5	
	SW	–1		28	
	DRVL	–0.1		5.5	
Ground pins	GND to PAD	–0.1		0.1	V
Operating junction temperature, T_J		–40		125	°C

6.4 Thermal Information

THERMAL METRIC[(1)]		TPS51604-Q1 WSON (DSG) (8 PINS)	UNIT
$R_{\theta JA}$	Junction-to-ambient thermal resistance	63.1	°C/W
$R_{\theta JC(top)}$	Junction-to-case (top) thermal resistance	74.1	
$R_{\theta JB}$	Junction-to-board thermal resistance	34.3	
ψ_{JT}	Junction-to-top characterization parameter	2.0	
ψ_{JB}	Junction-to-board characterization parameter	34.9	
$R_{\theta JC(bot)}$	Junction-to-case (bottom) thermal resistance	11.7	

(1) For more information about traditional and new thermal metrics, see the *IC Package Thermal Metrics* application report, SPRA953.

Copyright © 2014, Texas Instruments Incorporated

6.5 Electrical Characteristics

These specifications apply for T_J = –40°C to 125°C and VDD = 5 V unless otherwise specified.

PARAMETER		TEST CONDITIONS	MIN	TYP	MAX	UNIT
VDD INPUT SUPPLY						
I_{CC}	Supply current (operating)	$V_{\overline{SKIP}}$ = V_{VDD} or $V_{\overline{SKIP}}$ = 0 V, PWM = High		160	600	µA
		$V_{\overline{SKIP}}$ = V_{VDD} or $V_{\overline{SKIP}}$ = 0 V, PWM = Low		250		
		$V_{\overline{SKIP}}$ = V_{VDD} or $V_{\overline{SKIP}}$ = 0 V, PWM = Float		130		
		$V_{\overline{SKIP}}$ = Float		8		
VDD UNDERVOLTAGE LOCKOUT (UVLO)						
V_{UVLO}	UVLO threshold	Rising threshold			4.15	V
		Falling threshold	3.7			
V_{UVHYS}	UVLO hysteresis			0.2		V
PWM AND $\overline{SKIP}$ I/O SPECIFICATIONS						
R_I	Input impedance	Pullup to VDD		1.7		MΩ
		Pulldown (to GND)		800		kΩ
V_{IL}	Low-level input voltage				0.6	V
V_{IH}	High-level input voltage		2.65			
V_{IHH}	Hysteresis			0.2		
V_{TS}	Tri-state voltage		1.3		2.0	
$t_{THOLD(off1)}$	Tri-state activation time (falling) PWM			60		ns
$t_{THOLD(off2)}$	Tri-state activation time (rising) PWM			60		
t_{TSKF}	Tri-state activation time (falling) $\overline{SKIP}$			1		µs
t_{TSKR}	Tri-state activation time (rising) $\overline{SKIP}$			1		
$t_{3RD(PWM)}$	Tri-state exit time PWM				100	ns
$t_{3RD(\overline{SKIP})}$	Tri-state exit time $\overline{SKIP}$				50	µs
HIGH-SIDE GATE DRIVER (DRVH)						
$t_{R(DRVH)}$	Rise time	DRVH rising, C_{DRVH} = 3.3 nF; 20% to 80%		30		ns
$t_{RPD(DRVH)}$	Rise time propogation delay	C_{DRVH} = 3.3 nF		40		ns
R_{SRC}	Source resistance	Source resistance, (V_{BST}– V_{SW}) = 5 V, high state, (V_{BST} – V_{DRVH}) = 0.1 V		4	8	Ω
$t_{F(DRVH)}$	Fall time	DRVH falling, C_{DRVH} = 3.3 nF		8		ns
$t_{FPD(DRVH)}$	Fall-time propagation delay	C_{DRVH} = 3.3 nF		25		ns
R_{SNK}	Sink resistance	Sink resistance, (V_{BST} – V_{SW}) forced to 5 V, low state (V_{DRVH} – V_{SW}) = 0.1 V		0.5	1.6	Ω
R_{DRVH}	DRVH to SW resistance(1)			100		kΩ
LOW-SIDE GATE DRIVER (DRVL)						
$t_{R(DRVL)}$	Rise time	DRVL rising, C_{DRVL} = 3.3 nF; 20% to 80%		15		ns
$t_{RPD(DRVL)}$	Rise time propagation delay	C_{DRVL} = 3.3 nF		35		ns
R_{SRC}	Source resistance	Source resistance, (V_{VDD}–GND) = 5 V, high state, (V_{VDD} – V_{DRVL}) = 0.1 V		1.5	3	Ω
$t_{F(DRVL)}$	Fall time	DRVL falling, C_{DRVL} = 3.3 nF		10		ns
$t_{FPD(DRVL)}$	Fall-time propagation delay	C_{DRVL}= 3.3 nF		15		ns
R_{SNK}	Sink resistance	Sink resistance, (V_{VDD}– GND) = 5 V, low state, (V_{DRVL} – GND) = 0.1 V		0.4	1.6	Ω
R_{DRVL}	DRVL to GND resistance(1)			100		kΩ

(1) Specified by design. Not production tested.

Copyright © 2014, Texas Instruments Incorporated

Electrical Characteristics (continued)

These specifications apply for T_J = –40°C to 125°C and VDD = 5 V unless otherwise specified.

PARAMETER		TEST CONDITIONS	MIN	TYP	MAX	UNIT
GATE DRIVER DEAD-TIME						
$t_{R(DT)}$	Rising edge		0	20	35	ns
$t_{F(DT)}$	Falling edge		0	10	25	ns
ZERO CROSSING COMPARATOR						
V_{ZX}	Zero crossing offset	SW voltage rising	–2.25	0	2.00	mV
BOOTSTRAP SWITCH						
V_{FBST}	Forward voltage	I_F = 10 mA		120	240	mV
I_{RLEAK}	Reverse leakage	(V_{BST} – V_{VDD}) = 25 V			2	µA
$R_{DS(on)}$	On-resistance			12	24	Ω

Copyright © 2014, Texas Instruments Incorporated

6.6 Typical Characteristics

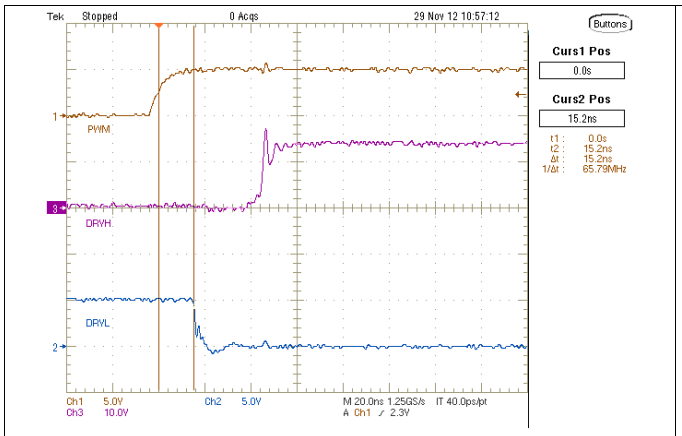

Figure 1. PWM High to DRVL Low

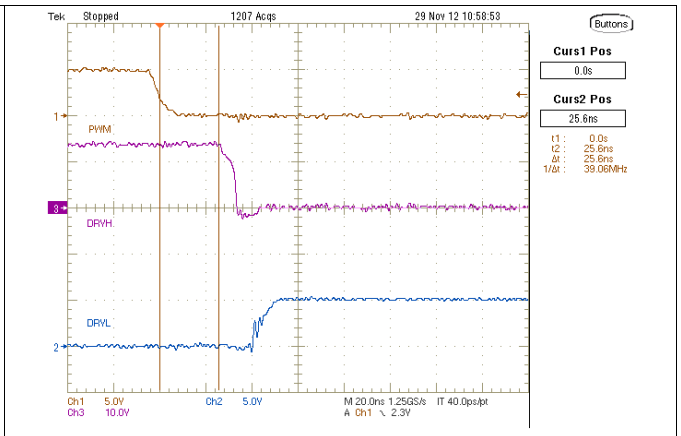

Figure 2. PWM Low to DRVH Low

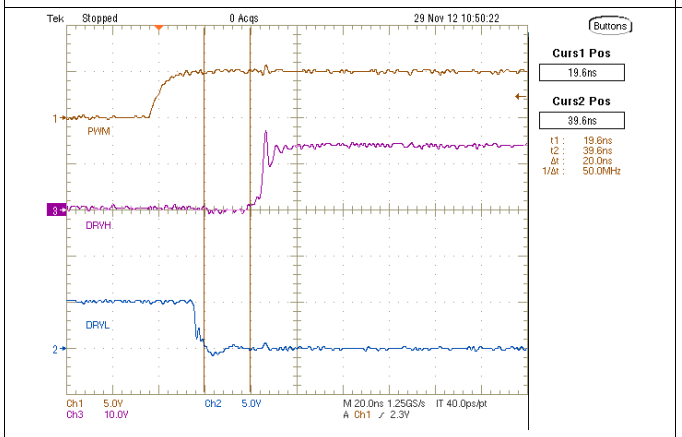

Figure 3. DRVL Low to DRVH High

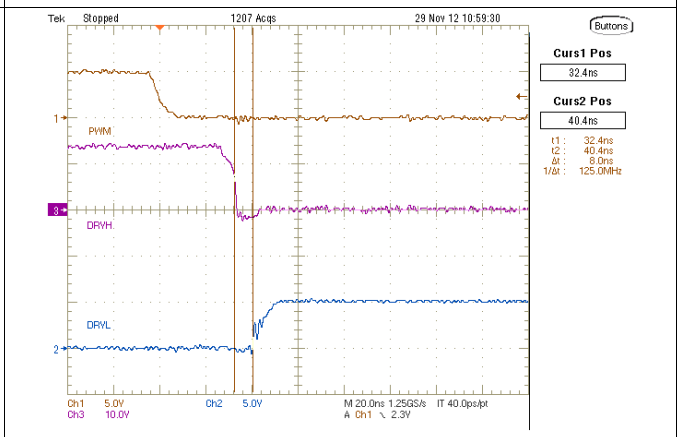

Figure 4. DRVH Low DRVL High

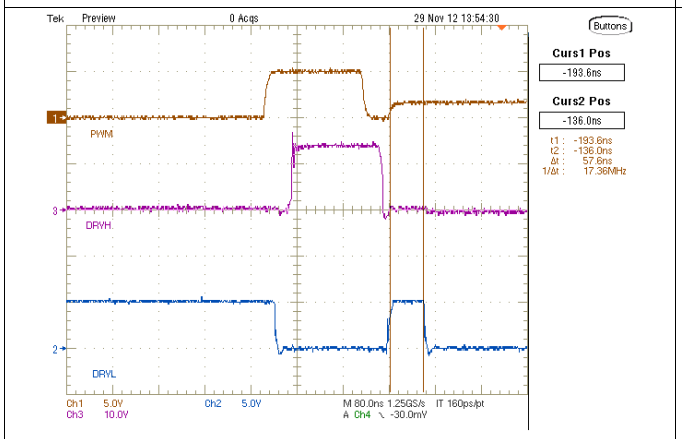

Figure 5. PWM Low to Tri-State

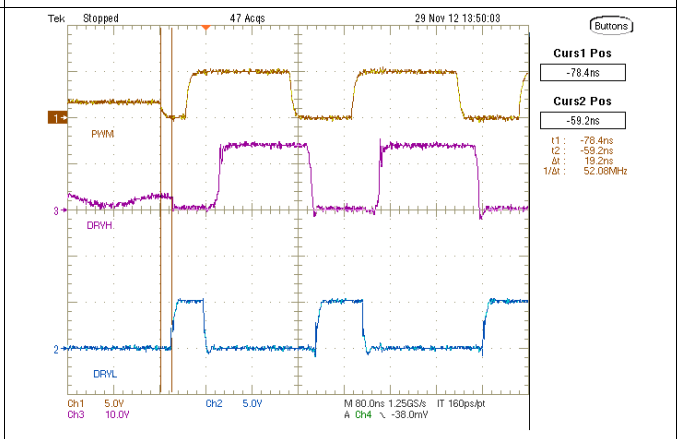

Figure 6. PWM Tri-State to Low

Typical Characteristics (continued)

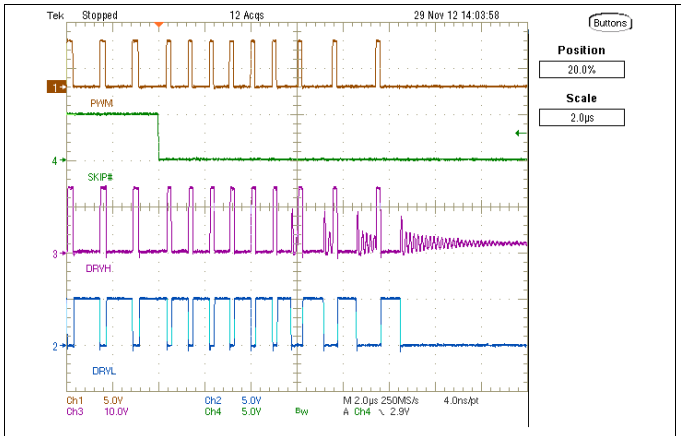

Figure 7. SKIP Mode Entry

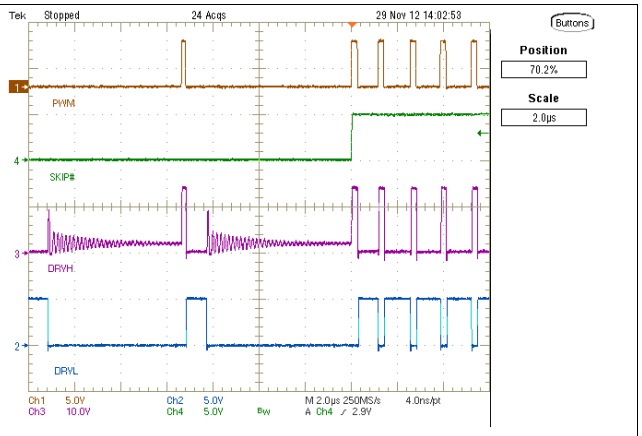

Figure 8. SKIP Mode Exit

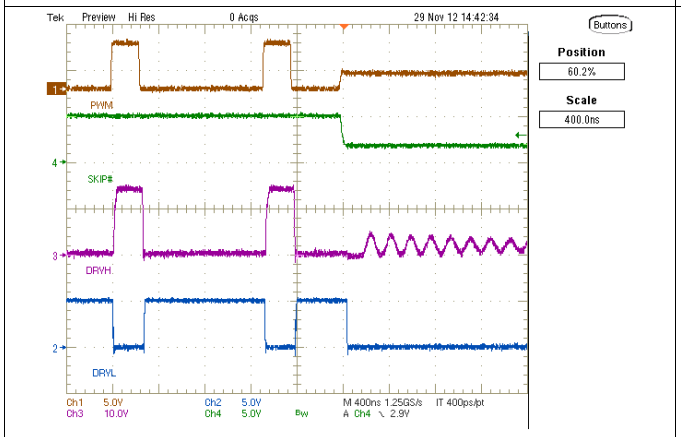

Figure 9. Very-Low-Power Mode Entry

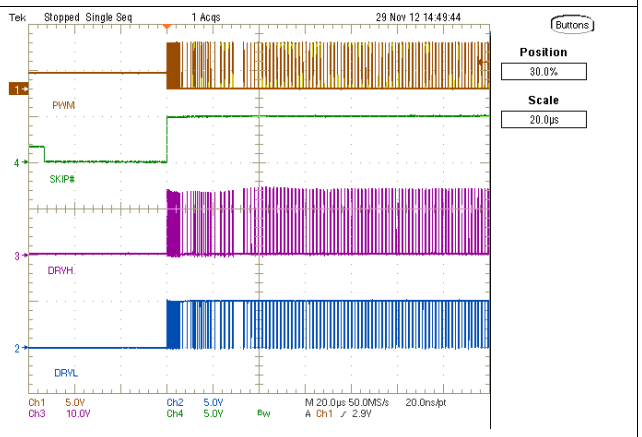

Figure 10. Very-Low-Power Mode Exit

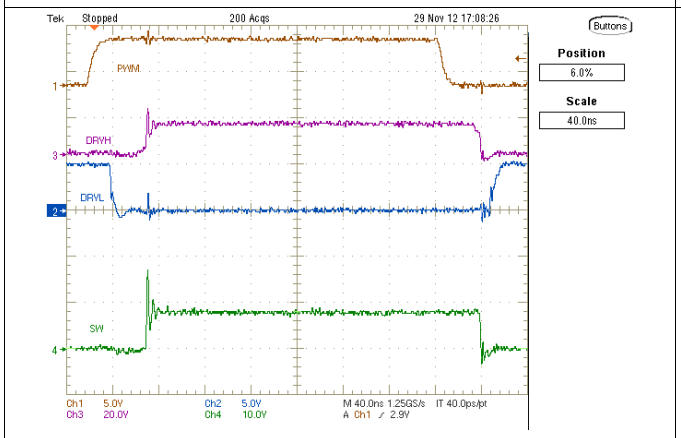

Figure 11. SW Node-Ringing at V_{IN} = 8 V

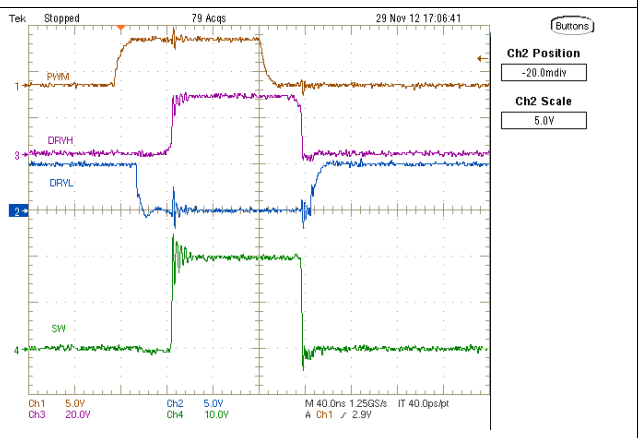

Figure 12. SW Node-Ringing at V_{IN} = 20 V

Copyright © 2014, Texas Instruments Incorporated

6.7 Typical Power Block MOSFET Characteristics

Power block MOSFET: CSD87330 (SLPS284), Inductor: 0.22 µF, 1.1-mΩ DCR

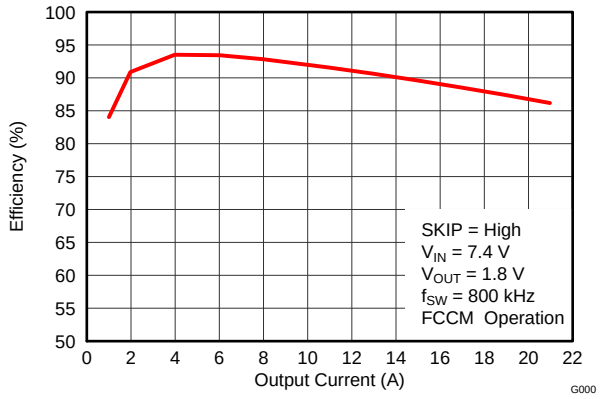

Figure 13. Efficiency vs Output Current, SKIP = High

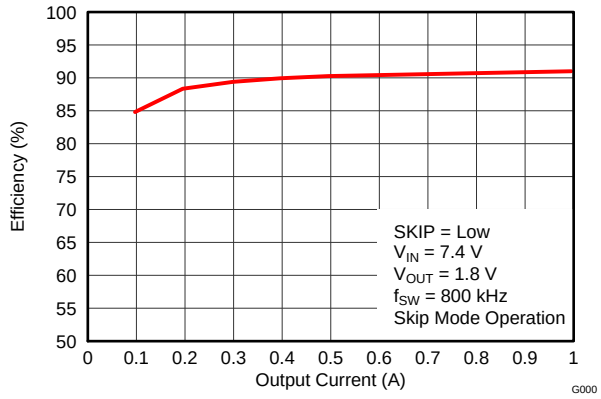

Figure 14. Efficiency vs Output Current, SKIP = Low

7 Detailed Description

7.1 Overview

The TPS51604-Q1 device is a synchronous-buck MOSFET driver designed to drive both high-side and low-side MOSFETs. It allows high-frequency operation with current driving capability matched to the application. The integrated boost switch is internal. The TPS51604-Q1 device employs dead-time reduction control and shoot-through protection, which helps avoid simultaneous conduction of high-side and low-side MOSFETs. Also, the drivers improve light-load efficiency with integrated DCM-mode operation using adaptive crossing detection. Typical applications yield a steady-state duty cycle of 60% or less. For high steady-state duty cycle applications, including a small external Schottky diode may help to ensure sufficient charging of the bootstrap capacitor.

7.2 Functional Block Diagram

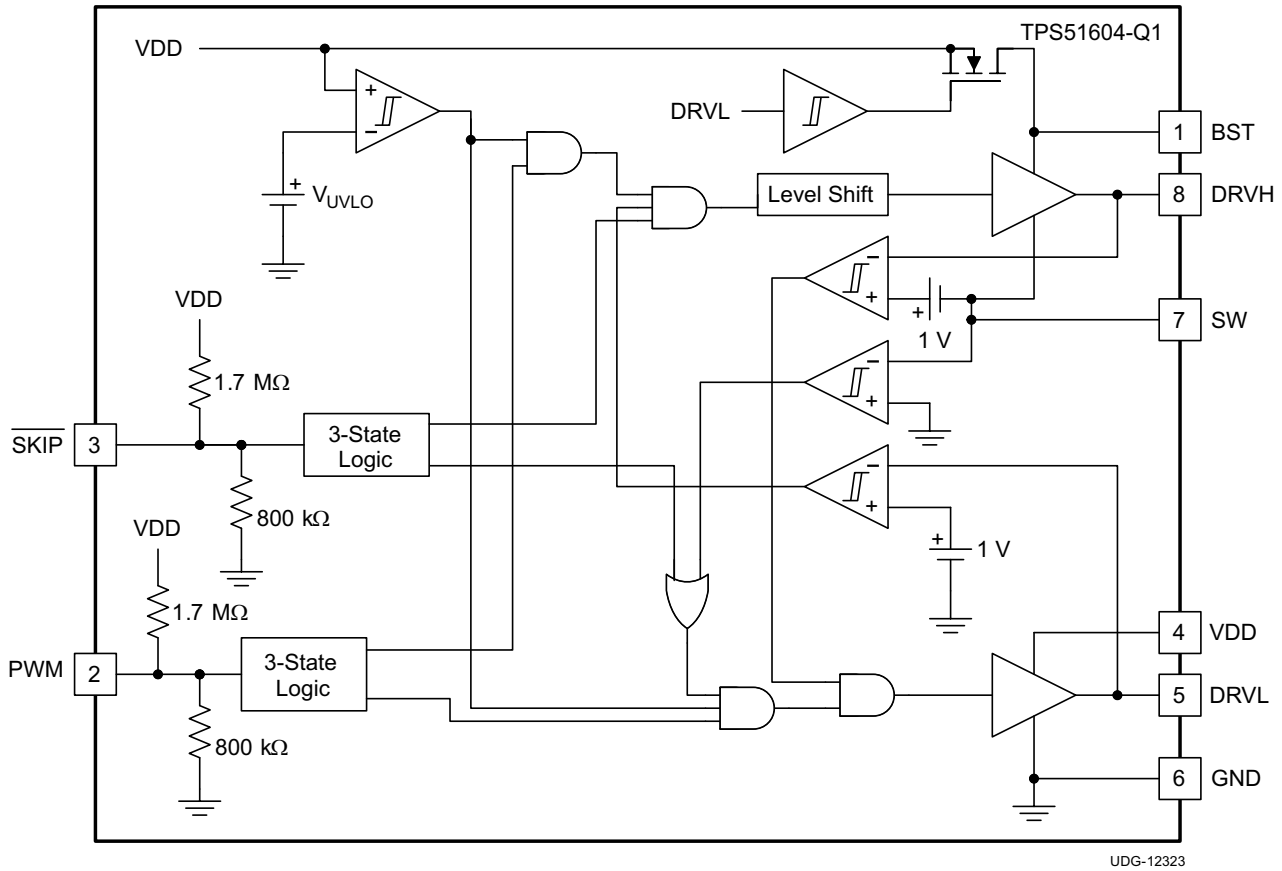

7.3 Feature Description

7.3.1 UVLO Protection

The UVLO comparator evaluates the VDD voltage level. As V_{VDD} rises, both DRVH and DRVL hold actively low at all times until V_{VDD} reaches the higher UVLO threshold (V_{UVLO_H}). Then, the driver becomes operational and responds to PWM and $\overline{SKIP}$ commands. If VDD falls below the lower UVLO threshold (V_{UVLO_L} = V_{UVLO_H} – Hysteresis), the device disables the driver and drives the outputs of DRVH and DRVL actively low. Figure 15 shows this function.

CAUTION

Do not start the driver in the very low power mode ($\overline{SKIP}$ = Tri-state).

Copyright © 2014, Texas Instruments Incorporated

Feature Description (continued)

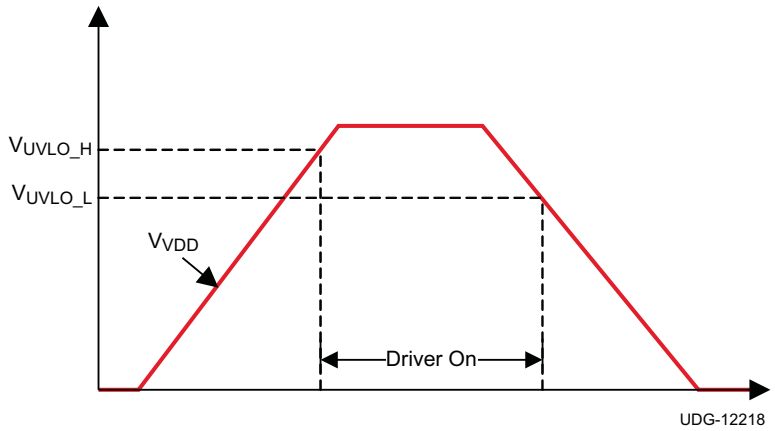

Figure 15. UVLO Operation

7.3.2 PWM Pin

The PWM pin incorporates an input tri-state function. The device forces the gate driver outputs to low when PWM is driven into the tri-state window and the driver enters a low power state with zero exit latency. The pin incorporates a weak pullup to maintain the voltage within the tri-state window during low-power modes. Operation into and out of tri-state mode follows the timing diagram outlined in Figure 16.

When VDD reaches the UVLO_H level, a tri-state voltage range (window) is set for the PWM input voltage. The window is defined as the PWM voltage range between PWM logic high (V_{IH}) and logic low (V_{IL}) thresholds. The device sets high-level input voltage and low-level input voltage threshold levels to accommodate both 3.3-V (typical) and 5-V (typical) PWM drive signals.

When the PWM exits tri-state, the driver enters CCM for a period of 4 µs, regardless of the state of the $\overline{SKIP}$ pin. Typical operation requires this time period in order for the auto-zero comparator to resume.

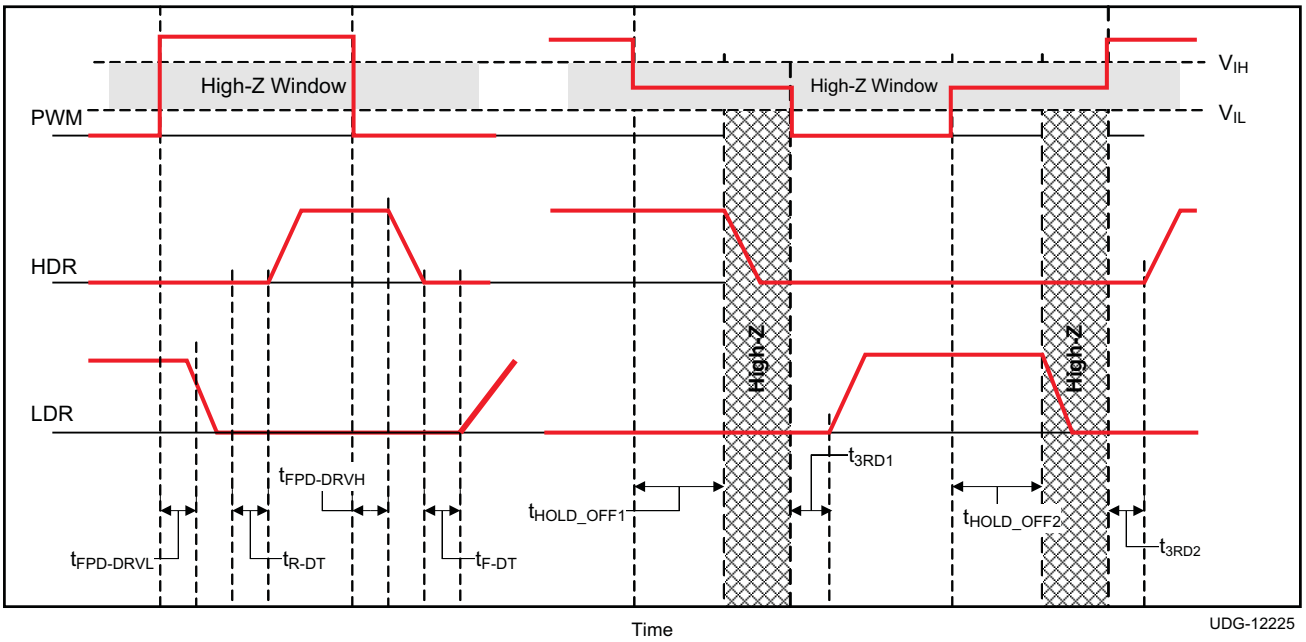

Figure 16. PWM Tri-State Timing Diagram

Feature Description (continued)

7.3.3 $\overline{\text{SKIP}}$ Pin

The $\overline{\text{SKIP}}$ pin incorporates the input tri-state buffer as PWM. The function is somewhat different. When $\overline{\text{SKIP}}$ is low, the zero crossing (ZX) detection comparator is enabled, and DCM mode operation occurs if the load current is less than the critical current. When $\overline{\text{SKIP}}$ is high, the ZX comparator disables, and the converter enters FCCM mode. When both $\overline{\text{SKIP}}$ and PWM are tri-stated, typical operation forces the gate driver outputs low and the driver enters a very-low-power state. In the low-power state, the UVLO comparator remains off to reduce quiescent current. When either $\overline{\text{SKIP}}$ is pulled low, the driver wakes up and is able to accept PWM pulses in less than 50 µs.

Table 1 shows the logic functions of UVLO, PWM, $\overline{\text{SKIP}}$, DRVH, and DRVL.

Table 1. Logic Functions of the TPS51604-Q1

UVLO	PWM	$\overline{\text{SKIP}}$	DRVL	DRVH	MODE
Active	—	—	Low	Low	Disabled
Inactive	Low	Low	High(1)	Low	DCM(1)
Inactive	Low	High	High	Low	FCCM
Inactive	High	H or L	Low	High	
Inactive	Tri-state	H or L	Low	Low	Low power
Inactive	—	Tri-state	Low	Low	Very-low power

(1) Until zero crossing protection occurs.

7.3.3.1 Zero Crossing (ZX) Operation

The zero crossing comparator is adaptive for improved accuracy. As the output current decreases from a heavy load condition, the inductor current also reduces and eventually arrives at a *valley*, where it touches zero current, which is the boundary between continuous conduction and discontinuous conduction modes. The SW pin detects the zero-current condition. When this zero inductor current condition occurs, the ZX comparator turns off the rectifying MOSFET.

7.3.4 Adaptive Dead-Time Control and Shoot-Through Protection

The driver utilizes an anti-shoot-through and adaptive dead-time control to minimize low-side body diode conduction time and maintain high efficiency. When the PWM input voltage becomes high, the low-side MOSFET gate voltage begins to fall after a propagation delay. At the same time, DRVL voltage is sensed, and high-side driving voltage starts to increase after DRVL voltage is lower than a proper threshold.

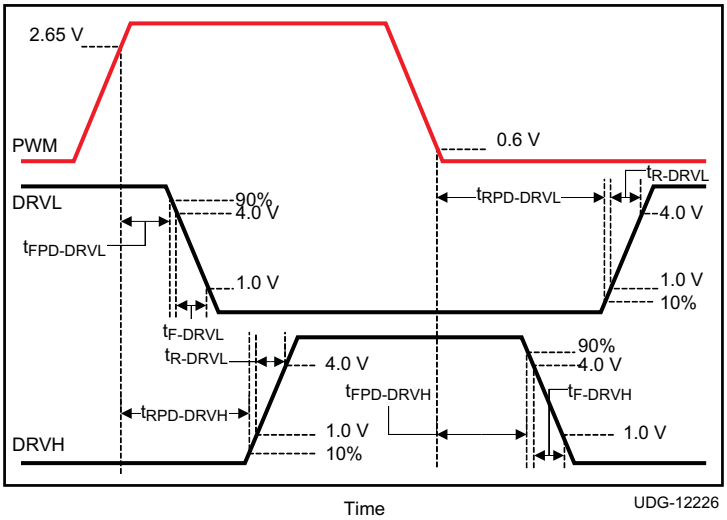

Figure 17. Rise and Fall Timing and Propagation Delay Definitions

Copyright © 2014, Texas Instruments Incorporated

Typical operation manages to near zero the dead-time between the low-side gate turn-off to high-side gate voltage turn-on, and high-side gate turn-off to low-side gate turn-on, in order to avoid simultaneous conduction of both MOSFETs, as well as to reduce body diode conduction and recovery losses. This operation also reduces ringing on the leading edge of the SW waveform.

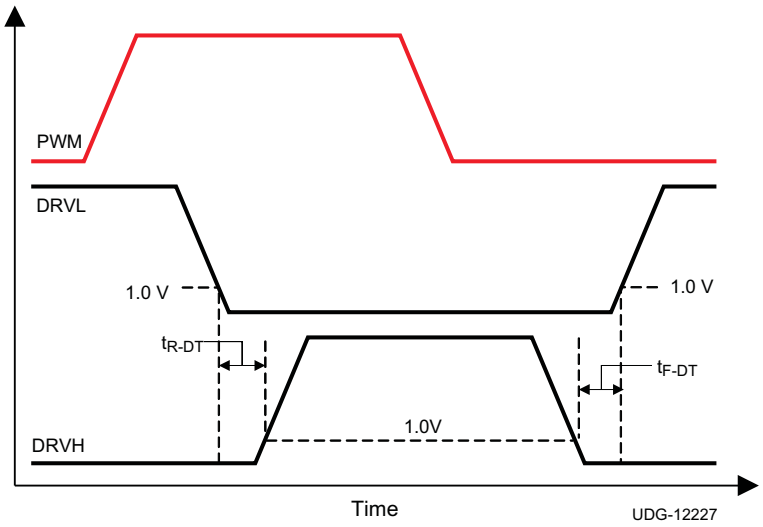

Figure 18. Dead-Time Definitions

7.3.5 Integrated Boost-Switch

To maintain a BST-SW voltage close to VDD (to get lower conduction losses on the high-side FET), the conventional diode between the VDD pin and BST pin is replaced by a FET, which is gated by the DRVL signal.

8 Layout

8.1 Layout Guidelines

To improve the switching characteristics and design efficiency, these layout rules must be considered:

- Locate the driver as close as possible to the MOSFETs.
- Locate the VDD and bootstrap capacitors as close as possible to the driver.
- Pay special attention to the GND trace. Use the thermal pad of the package as the GND by connecting it to the GND pin. The GND trace or pad from the driver goes directly to the source of the MOSFET, but should not include the high current path of the main current flowing through the drain and source of the MOSFET.
- Use a similar rule for the switch-node as for the GND.
- Use wide traces for DRVH and DRVL closely following the related SW and GND traces. A width of between 80 and 100 mils is preferable where possible.
- Place the bypass capacitors as close as possible to the driver.
- Avoid PWM and enable traces going close to the SW and pad where high dV/dT voltage can induce significant noise into the relatively high-impedance leads.

A poor layout can decrease the reliability of the entire system.

Copyright © 2014, Texas Instruments Incorporated

9 Device and Documentation Support

9.1 Trademarks

All trademarks are the property of their respective owners.

9.2 Electrostatic Discharge Caution

These devices have limited built-in ESD protection. The leads should be shorted together or the device placed in conductive foam during storage or handling to prevent electrostatic damage to the MOS gates.

9.3 Glossary

SLYZ022 — *TI Glossary*.

This glossary lists and explains terms, acronyms, and definitions.

10 Mechanical, Packaging, and Orderable Information

The following pages include mechanical, packaging, and orderable information. This information is the most current data available for the designated devices. This data is subject to change without notice and revision of this document. For browser-based versions of this data sheet, refer to the left-hand navigation.

PACKAGING INFORMATION

Orderable Device	Status (1)	Package Type	Package Drawing	Pins	Package Qty	Eco Plan (2)	Lead/Ball Finish (6)	MSL Peak Temp (3)	Op Temp (°C)	Device Marking (4/5)	Samples
TPS51604QDSGRQ1	ACTIVE	WSON	DSG	8	3000	Green (RoHS & no Sb/Br)	CU NIPDAU	Level-2-260C-1 YEAR	-40 to 125	604Q	Samples
TPS51604QDSGTQ1	ACTIVE	WSON	DSG	8	250	Green (RoHS & no Sb/Br)	CU NIPDAU	Level-2-260C-1 YEAR	-40 to 125	604Q	Samples

(1) The marketing status values are defined as follows:
ACTIVE: Product device recommended for new designs.
LIFEBUY: TI has announced that the device will be discontinued, and a lifetime-buy period is in effect.
NRND: Not recommended for new designs. Device is in production to support existing customers, but TI does not recommend using this part in a new design.
PREVIEW: Device has been announced but is not in production. Samples may or may not be available.
OBSOLETE: TI has discontinued the production of the device.

(2) **RoHS:** TI defines "RoHS" to mean semiconductor products that are compliant with the current EU RoHS requirements for all 10 RoHS substances, including the requirement that RoHS substance do not exceed 0.1% by weight in homogeneous materials. Where designed to be soldered at high temperatures, "RoHS" products are suitable for use in specified lead-free processes. TI may reference these types of products as "Pb-Free".
RoHS Exempt: TI defines "RoHS Exempt" to mean products that contain lead but are compliant with EU RoHS pursuant to a specific EU RoHS exemption.
Green: TI defines "Green" to mean the content of Chlorine (Cl) and Bromine (Br) based flame retardants meet JS709B low halogen requirements of <=1000ppm threshold. Antimony trioxide based flame retardants must also meet the <=1000ppm threshold requirement.

(3) MSL, Peak Temp. - The Moisture Sensitivity Level rating according to the JEDEC industry standard classifications, and peak solder temperature.

(4) There may be additional marking, which relates to the logo, the lot trace code information, or the environmental category on the device.

(5) Multiple Device Markings will be inside parentheses. Only one Device Marking contained in parentheses and separated by a "~" will appear on a device. If a line is indented then it is a continuation of the previous line and the two combined represent the entire Device Marking for that device.

(6) Lead/Ball Finish - Orderable Devices may have multiple material finish options. Finish options are separated by a vertical ruled line. Lead/Ball Finish values may wrap to two lines if the finish value exceeds the maximum column width.

Important Information and Disclaimer: The information provided on this page represents TI's knowledge and belief as of the date that it is provided. TI bases its knowledge and belief on information provided by third parties, and makes no representation or warranty as to the accuracy of such information. Efforts are underway to better integrate information from third parties. TI has taken and continues to take reasonable steps to provide representative and accurate information but may not have conducted destructive testing or chemical analysis on incoming materials and chemicals. TI and TI suppliers consider certain information to be proprietary, and thus CAS numbers and other limited information may not be available for release.

In no event shall TI's liability arising out of such information exceed the total purchase price of the TI part(s) at issue in this document sold by TI to Customer on an annual basis.

OTHER QUALIFIED VERSIONS OF TPS51604-Q1 :

- Catalog: TPS51604

NOTE: Qualified Version Definitions:

- Catalog - TI's standard catalog product

TAPE AND REEL INFORMATION

REEL DIMENSIONS

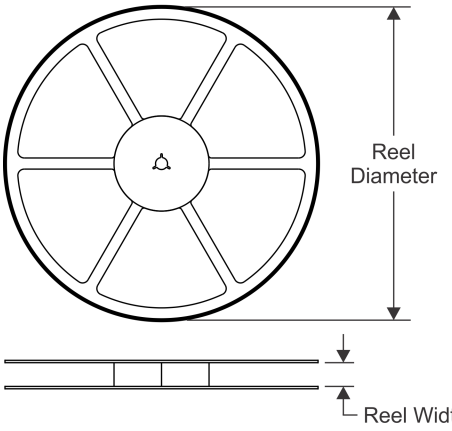

TAPE DIMENSIONS

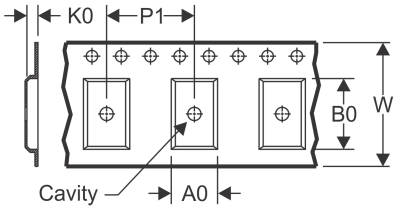

A0	Dimension designed to accommodate the component width
B0	Dimension designed to accommodate the component length
K0	Dimension designed to accommodate the component thickness
W	Overall width of the carrier tape
P1	Pitch between successive cavity centers

QUADRANT ASSIGNMENTS FOR PIN 1 ORIENTATION IN TAPE

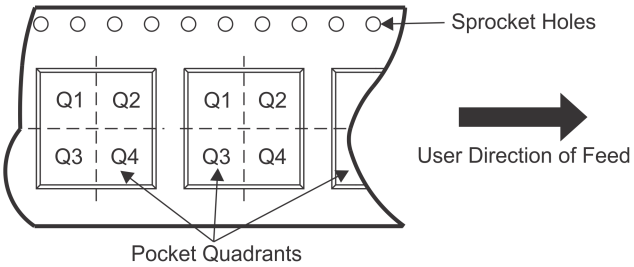

*All dimensions are nominal

Device	Package Type	Package Drawing	Pins	SPQ	Reel Diameter (mm)	Reel Width W1 (mm)	A0 (mm)	B0 (mm)	K0 (mm)	P1 (mm)	W (mm)	Pin1 Quadrant
TPS51604QDSGRQ1	WSON	DSG	8	3000	180.0	8.4	2.3	2.3	1.15	4.0	8.0	Q2
TPS51604QDSGTQ1	WSON	DSG	8	250	180.0	8.4	2.3	2.3	1.15	4.0	8.0	Q2

TAPE AND REEL BOX DIMENSIONS

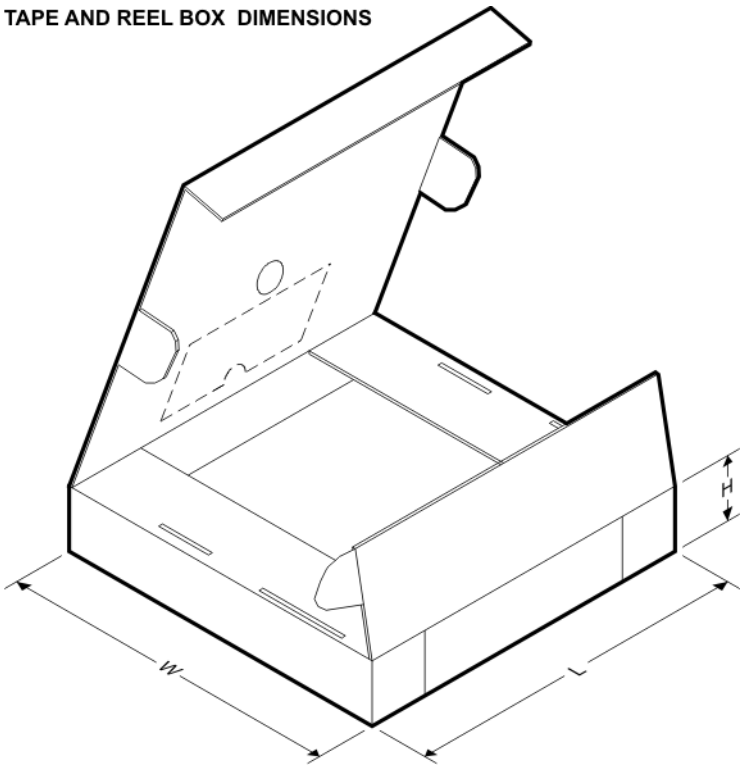

*All dimensions are nominal

Device	Package Type	Package Drawing	Pins	SPQ	Length (mm)	Width (mm)	Height (mm)
TPS51604QDSGRQ1	WSON	DSG	8	3000	210.0	185.0	35.0
TPS51604QDSGTQ1	WSON	DSG	8	250	210.0	185.0	35.0

GENERIC PACKAGE VIEW

DSG 8

WSON - 0.8 mm max height

2 x 2, 0.5 mm pitch

PLASTIC SMALL OUTLINE - NO LEAD

This image is a representation of the package family, actual package may vary.
Refer to the product data sheet for package details.

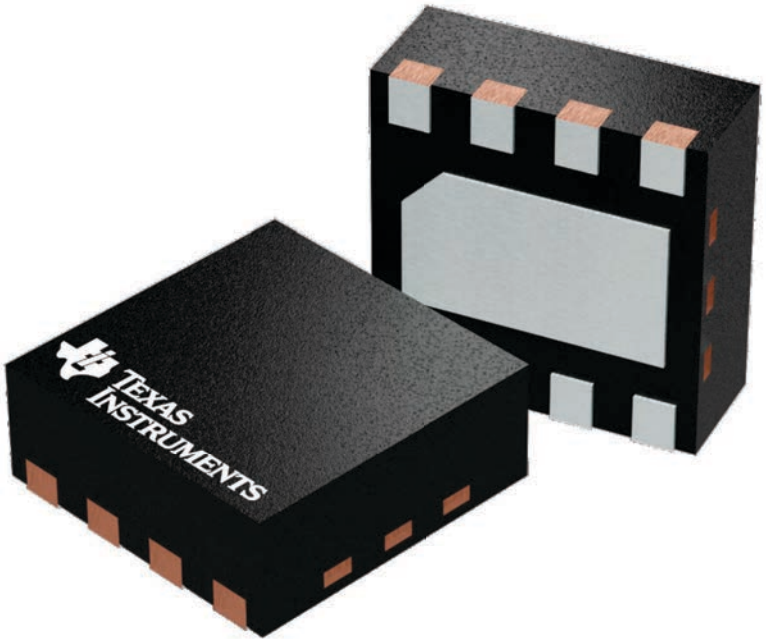

4224783/A

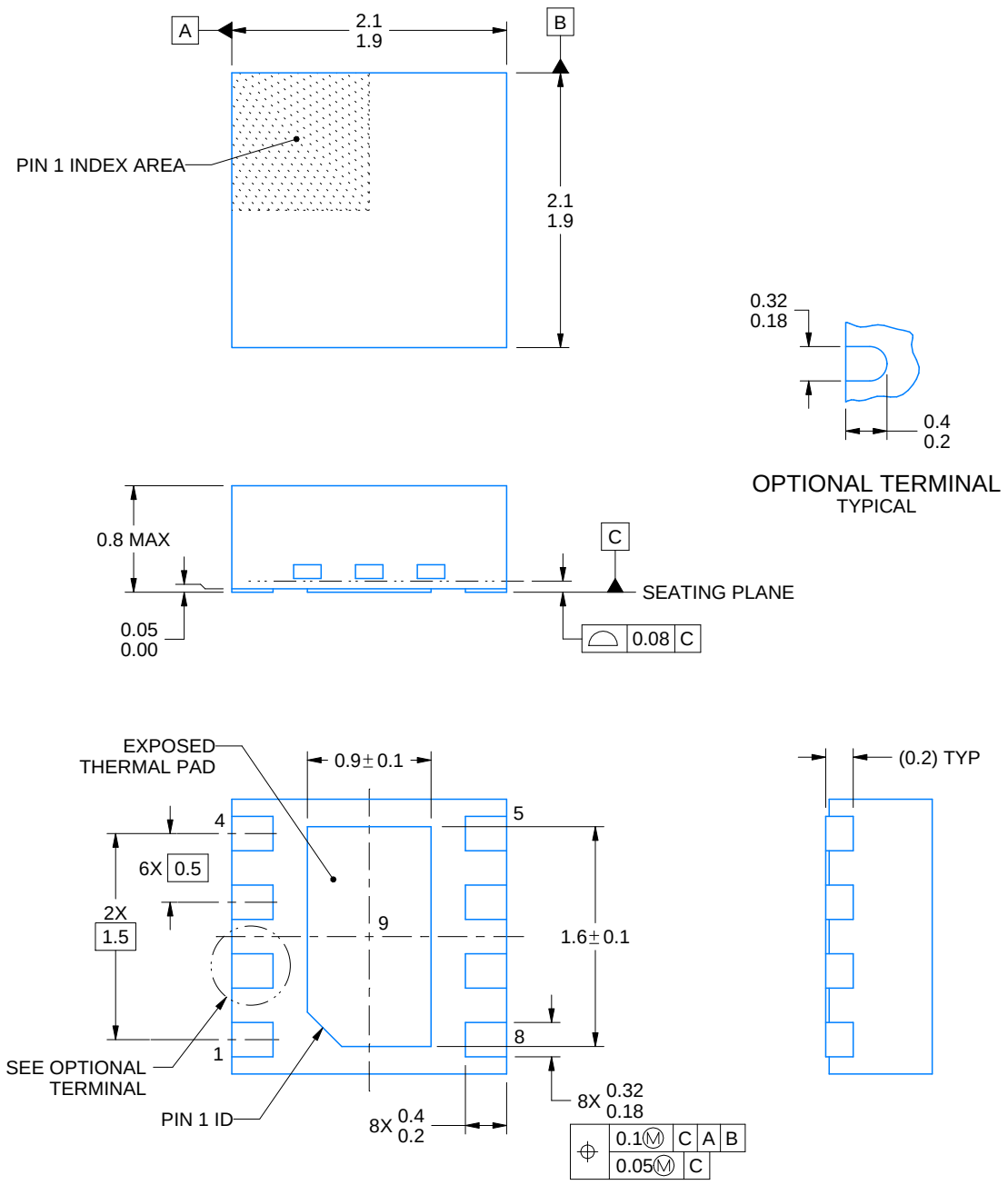

NOTES:

1. All linear dimensions are in millimeters. Any dimensions in parenthesis are for reference only. Dimensioning and tolerancing per ASME Y14.5M.
2. This drawing is subject to change without notice.
3. The package thermal pad must be soldered to the printed circuit board for thermal and mechanical performance.

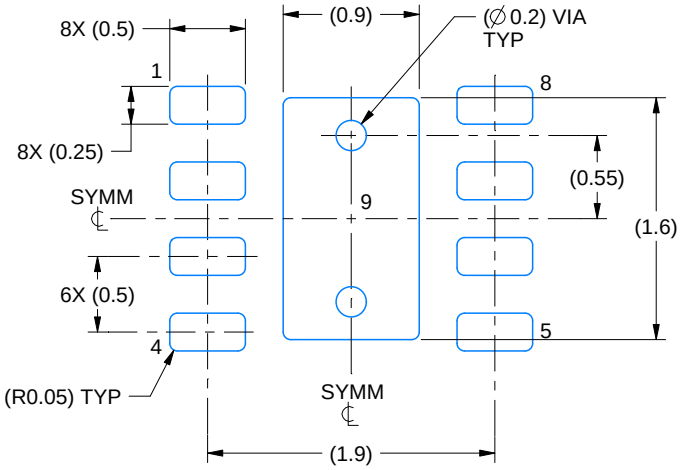

LAND PATTERN EXAMPLE
SCALE:20X

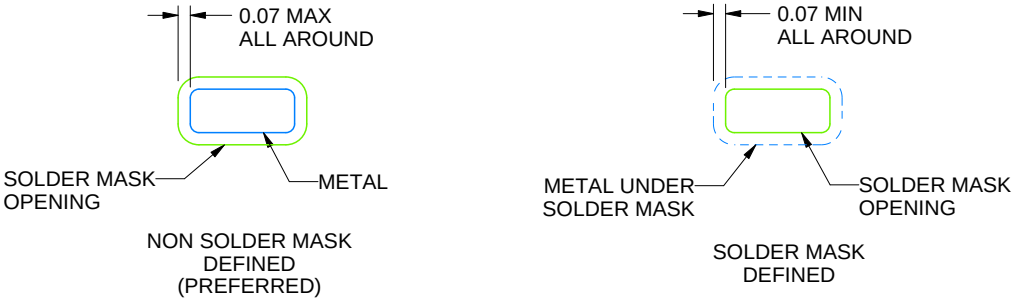

SOLDER MASK DETAILS

4218900/C 04/2019

NOTES: (continued)

4. This package is designed to be soldered to a thermal pad on the board. For more information, see Texas Instruments literature number SLUA271 (www.ti.com/lit/slua271).
5. Vias are optional depending on application, refer to device data sheet. If any vias are implemented, refer to their locations shown on this view. It is recommended that vias under paste be filled, plugged or tented.

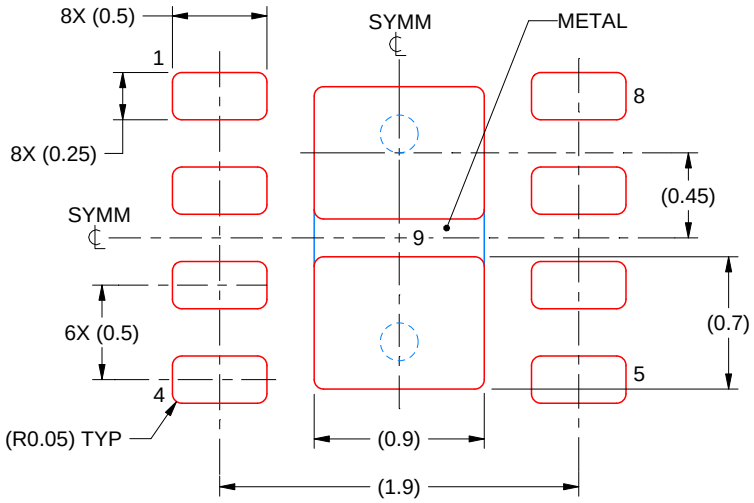

SOLDER PASTE EXAMPLE
BASED ON 0.125 mm THICK STENCIL

EXPOSED PAD 9:
87% PRINTED SOLDER COVERAGE BY AREA UNDER PACKAGE
SCALE:25X

4218900/C 04/2019

NOTES: (continued)

6. Laser cutting apertures with trapezoidal walls and rounded corners may offer better paste release. IPC-7525 may have alternate design recommendations.

IMPORTANT NOTICE AND DISCLAIMER

TI PROVIDES TECHNICAL AND RELIABILITY DATA (INCLUDING DATASHEETS), DESIGN RESOURCES (INCLUDING REFERENCE DESIGNS), APPLICATION OR OTHER DESIGN ADVICE, WEB TOOLS, SAFETY INFORMATION, AND OTHER RESOURCES “AS IS” AND WITH ALL FAULTS, AND DISCLAIMS ALL WARRANTIES, EXPRESS AND IMPLIED, INCLUDING WITHOUT LIMITATION ANY IMPLIED WARRANTIES OF MERCHANTABILITY, FITNESS FOR A PARTICULAR PURPOSE OR NON-INFRINGEMENT OF THIRD PARTY INTELLECTUAL PROPERTY RIGHTS.

These resources are intended for skilled developers designing with TI products. You are solely responsible for (1) selecting the appropriate TI products for your application, (2) designing, validating and testing your application, and (3) ensuring your application meets applicable standards, and any other safety, security, or other requirements. These resources are subject to change without notice. TI grants you permission to use these resources only for development of an application that uses the TI products described in the resource. Other reproduction and display of these resources is prohibited. No license is granted to any other TI intellectual property right or to any third party intellectual property right. TI disclaims responsibility for, and you will fully indemnify TI and its representatives against, any claims, damages, costs, losses, and liabilities arising out of your use of these resources.

TI’s products are provided subject to TI’s Terms of Sale (www.ti.com/legal/termsofsale.html) or other applicable terms available either on ti.com or provided in conjunction with such TI products. TI’s provision of these resources does not expand or otherwise alter TI’s applicable warranties or warranty disclaimers for TI products.

Mailing Address: Texas Instruments, Post Office Box 655303, Dallas, Texas 75265
Copyright © 2019, Texas Instruments Incorporated