DRAWING MADE IN THIRD ANGLE PROJECTION

1855010 ⇔ 1855010

/home/us052641

PART NUMBER	REV	POWER UNIT	FEED TYPE	DESCRIPTION
1855010-1	A	LEADMAKER	POST FEED	CUTS CARRIER
1855010-2	A	BENCH K	PRE FEED	CUTS CARRIER
1855010-3	A	BENCH G	PRE FEED	CUTS CARRIER
1855010-6	A	LEADMAKER	POST FEED	CONT. CARRIER
7-1855010-7	A	-	-	SPARE PARTS

TERMINAL NAME: MSK-FLACHKNOTAKT

AMP TERM PN	MFR TERM PN
1572830	28054.201.178

LEAR TERMINAL LEAR CRIMP SPECS

PAD LTR	CRIMP HEIGHT	WIRE SIZE
A	.033 ±.002 [0.84 ±0.05mm]	0.35mm
B	NOT	USED
C	NOT	USED
D	NOT	USED

CRIMP	SIZE	TYPE	RANGE
WIRE	.050 [1.27mm]	F	0.35mm
INSUL	.066 [1.68mm]	O	1.52mm MAX

WIRE STRIP LENGTH	TERM APPL SPEC	FEED	APPL INSTRUCTION	SET UP GAGE	LAYOUT
3.10-3.48mm	NONE	6.96mm	408-8040	458637-1	-

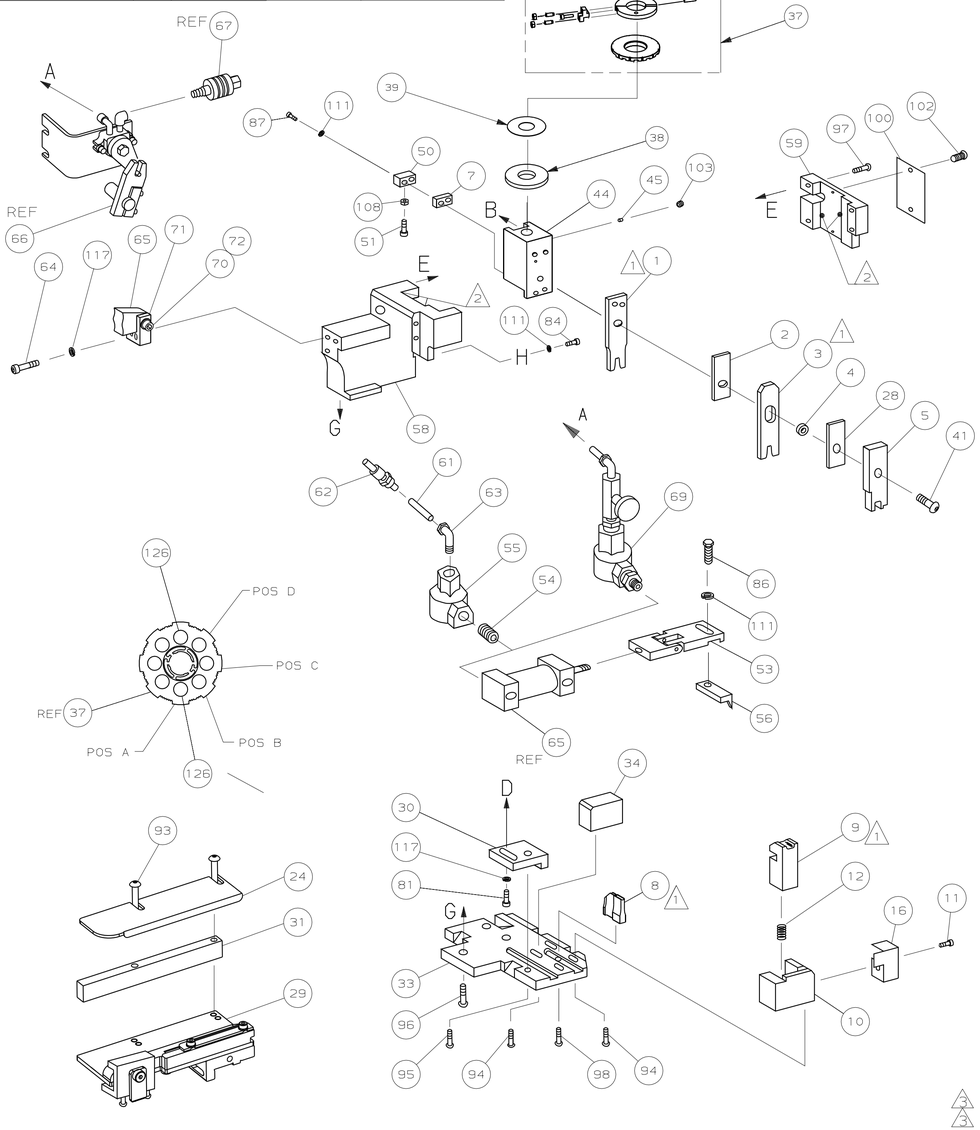

-77	-6	-3	-2	-1	U/M	DWG SIZE	PART NO	DESCRIPTION	ITEM NO
									129
									128
									127
	2	2	2	2	-	C	5-354779-6	PIN, WIRE DISC (.3270) A	126
									125
	1	1	1	1	-	A	217238-1	GENERAL INSTRUCTION PACKAGE	124
	1	1	1	1	-	-	4088040	SF APPL INST 408-8040	123
									122
									121
									120
									119
									118
	3	3	3	3	-	A	21024-5	WASHER, LOCK(#10)ADJ BLOCK	117
									116
									115
									114
									113
									112
	4	4	4	4	-	A	21024-4	WASHER,LOCK(#8)STRIPPER	111
									110
									109
	1	1	1	1	-	A	21018-5	NUT,HEX(NO.6)HOLDDOWN	108
									107
									106
									105
	-	1	1	-	-	A	992031-1	PIN, CLEVIS	104
	1	1	1	1	-	A	21009-2	SCR,SKT SET(1/4-20x.25 LW)RAM	103
	2	2	2	2	-	A	21017-2	SCR,DRIVE(#2x.19)ID PLATE	102
									101
	1	1	1	1	-	B	461264-1	PLATE, IDENTIFICATION	100
									99
	1	1	1	1	-	A	22733-8	SCR,BHC(8-32x.38 LW)ANVIL	98
	4	4	4	4	-	A	2-21002-9	SCR,BHC(10-32x.75)CAP	97
	3	3	3	3	-	A	2-22733-8	SCR,BHC(1/4-20x.62)HSG	96
	1	1	1	1	-	A	2-21002-7	SCR,BHC(10-32x.50)SG ADJ BLK	95
	4	4	4	4	-	A	2-21002-2	SCR,BHC(8-32x.50)TERM H DWN	94
	2	2	2	2	-	A	2-21002-3	SCR,BHC(8-32x.63)	93
									92
									91
									90
	-	1	1	-	-	A	7-21000-9	SCR,SHC(4-40x.19)STRIPPER	89
									88
	2	2	2	2	-	A	2-21000-8	SCR,SHC(8-32x.63)DEP-HOLD	87
	1	1	1	1	-	A	2-22603-1	SCR,HEX HD(8-32x.38)FEED FINGER	86
									85
	1	1	1	1	-	A	2-21000-7	SCR,SHC(8-32x.50)STRIPPER	84
									83
									82
	1	1	1	1	-	A	3-21000-4	SCR,SHC(10-32x.38)SG ADJ BL	81
									80
3	-	-	REF	-	-	B	462992-7	GUARD ASSY	79
3	-	REF	-	-	-	B	679532-1	INSERT, GUARD	78
									77
									76
									75
									74
									73
	1	1	1	1	-	A	3-21001-5	SCR,SHC(3/8-16X1.00)AIR FEED	72
	1	1	1	1	-	B	459610-1	MOUNT, FEED BRACKET	71
-77	-6	-3	-2	-1	U/M	DWG SIZE	PART NO	DESCRIPTION	ITEM NO
	QTY REQD PER ASSY						PARTS LIST		

-77	-6	-3	-2	-1	U/M	DWG SIZE	PART NO	DESCRIPTION	ITEM NO
									70
4	-	-	1	-	-	C	692655-5	AIR FEED VALVE ASSY	69
									68
	-	-	REF	-	-	A	24042-2	VALVE, SHUT OFF	67
4	-	-	REF	-	-	C	692655-6	AIR FEED VALVE ASSY	66
4	1	1	1	1	-	B	461065-1	AIR FEED ASSY (1 INCH)	65
	2	2	2	2	-	A	3-21000-7	SCR,SHC(10-32x.75)AIR ASSY	64
	1	1	-	1	-	A	980285-2	ELBOW, SWIVEL 1/8 NPT - 1/4 T	63
	1	1	-	1	-	A	23238-1	QUICK DISCONNECT	62
	21.00	21.00	-	21.00	IN	A	27319-4	TUBING, POLY-FLO Ø.25	61
									60
	1	1	1	1	-	C	454220-1	CAP, RAM	59
	1	1	1	1	-	D	454485-1	HOUSING	58
									57
	1	1	1	1	-	B	458537-2	PAWL, FEED	56
	1	1	-	1	-	A	22374-7	VALVE, QUICK EXHAUST	55
	1	1	-	1	-	A	22304-1	NIPPLE, HEX	54
4	1	1	1	1	-	B	461062-1	FEED FINGER ASSY	53
									52
	1	1	1	1	-	A	811242-2	BUMPER, HOLDDOWN	51
	1	1	1	1	-	A	690753-1	SPACER, TONKER	50
									49
									48
									47
									46
	1	1	1	1	-	A	690191-1	PLUG, NYLON	45
	1	1	1	1	-	C	455673-1	RAM	44
	1	1	1	1	-	A	690125-1	WASHER, LAMINATED	43
	1	1	1	1	-	A	690124-1	WASHER, RAM	42
	1	1	1	1	-	A	7-21002-9	BOLT, CRIMPER(5/16x1.00)	41
									40
	1	1	1	1	-	B	690124-1	WASHER, RAM (.115)	39
	1	1	1	1	-	B	469367-8	SHIM	38
	1	1	1	1	-	B	879103-3	FINE ADJUST HEAD SUBASSY	37
									36
									35
	1	1	1	1	-	B	690786-6	SUPPORT, TERMINAL	34
	1	1	1	1	-	D	455675-1	PLATE, BASE	33
									32
	1	1	1	1	-	B	1320908-9	SPACER, STRIP GUIDE	31
	1	1	1	1	-	B	455689-1	BLOCK, STRIP GUIDE ADJ	30
	1	1	1	1	-	C	1633091-4	STRIP GUIDE ASSEMBLY	29
	1	1	1	1	-	C	1-455888-0	SPACER, FRONT SHEAR DEP	28
									27
									26
									25
	1	1	1	1	-	D	1320928-1	GUIDE, STRIP (REAR)	24
									23
	1	-	-	1	-	B	691353-1	STRIPPER	22
									21
	-	1	1	-	-	A	679218-1	STRIPPER WIRE STOP ASSY	20
	-	1	1	-	-	B	690472-2	STRIPPER	19
									18
	1	-	-	-			679625-1	HOLDER, SHEAR (FRONT) NO CUT	17
	1	1	1	1	-	B	318563-1	GUARD, CHIP, FRONT	16
									15
									14
									13
	1	1	1	1	-	A	5-22280-0	SPRING, SHEAR	12
	1	1	1	1	-	B	690461-1	STOP, SHEAR	11
		1	1	-	-	C	690459-1	HOLDER, SHEAR (FRONT)	10
2	1	1	1	1	-	C	1-454276-9	SHEAR, FLOAT (FRONT)	9
1	1	1	1	1	-	C	3-1633116-5	ANVIL	8
	1	1	1	1	-	C	5-240641-2	SPACER, DEPRESSOR (REAR)	7
									6
	1	1	1	1	-	C	1-455889-4	DEPRESSOR, SHEAR (FRONT)	5
	1	1	1	1	-	B	238011-8	SPACER, BLOCK CRIMPER	4
1	1	1	1	1	-	C	7-683454-4	CRIMPER, INSULATION	3
	1	1	1	1	-	C	455888-7	SPACER, CRIMPER	2
1	1	1	1	1	-	C	5-568176-3	CRIMPER, WIRE	1
-77	-6	-3	-2	-1	U/M	DWG SIZE	PART NO	DESCRIPTION	ITEM NO
	QTY REQD PER ASSY						PARTS LIST		

REVISION OF EACH ASSY NO (WHEN BLANK, USE DWG REVISION)

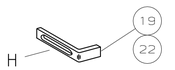

LEADMAKER & BENCH MACHINE

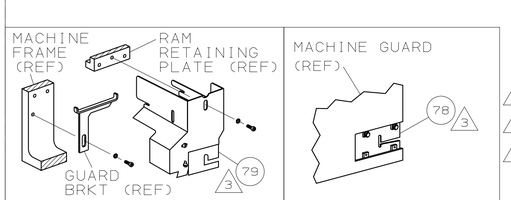

AMP-O-LECTRIC™ TERM GUARD

G TERMINATOR GUARD

1. RECOMMENDED SPARE PARTS.
2. GREASE LIGHTLY.
3. GUARD MUST BE IN PLACE WHEN OPERATING APPLICATOR IN A BENCH MACHINE.
4. SEE DRAWING FOR COMPONENTS

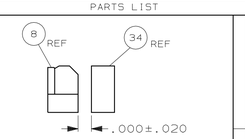

ITEM 34 LOCATION

P	F	LTR	REVISION RECORD	APP	DATE
		-	-	.	.

DIMENSIONS IN INCHES.
DO NOT SCALE PRINT.
TOLERANCES UNLESS OTHERWISE SPECIFIED:
2 PLC DEC ±.25
3 PLC DEC ±-
4 PLC DEC ±-
ANGLES ± -
SURF TEXTURE: √
REMOVE BURRS, BREAK SHARP EDGES R.015 MAX

MATL	HT TR	FIN
-	-	-
-	-	-

DR 22NOV05 C.REICHELDERFER
APP 22NOV05 T.ELBIN
CHK - -
REL - -

AMP — Tyco Electronics, Harrisburg, PA 17105-3608

NAME SIDE FEED HDM APPLICATOR
MACHINE REF MINI APPL
SCALE -
D
DWG NO 1855010
SHEET 1 OF 1
REV A

CAGE CODE 00779
CUSTOMER AND ASSEMBLY DRAWING
RESTRICTED TO —

THIS DRAWING IS A CONTROLLED DOCUMENT.
THIS DRAWING IS UNPUBLISHED. © COPYRIGHT 20 BY AMP INCORPORATED. ALL RIGHTS RESERVED. RELEASED FOR PUBLICATION .20

LOC A
DIST 66

AMP 1756 REV 3-92 22-NOV-05 14:45:00 us052641

1855010

Mouser Electronics

Authorized Distributor

Click to View Pricing, Inventory, Delivery & Lifecycle Information:

TE Connectivity:

1855010-1