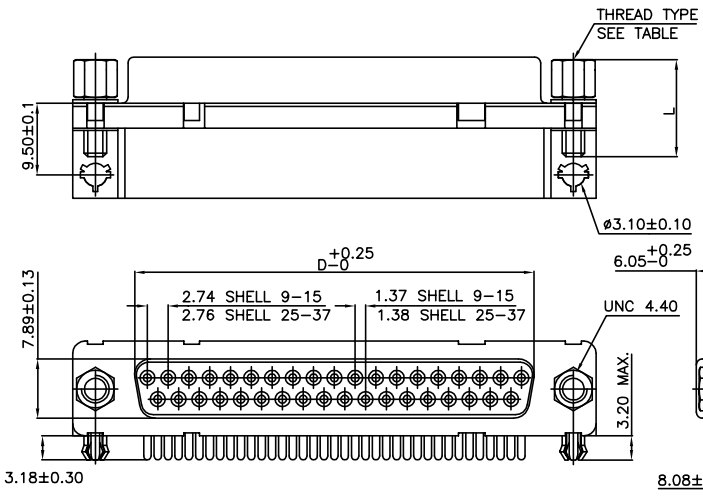

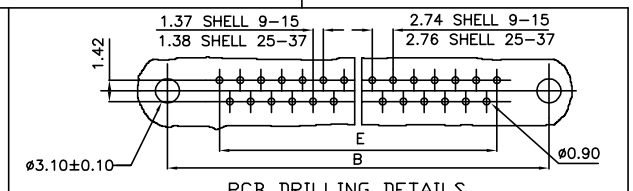

PCB DRILLING DETAILS

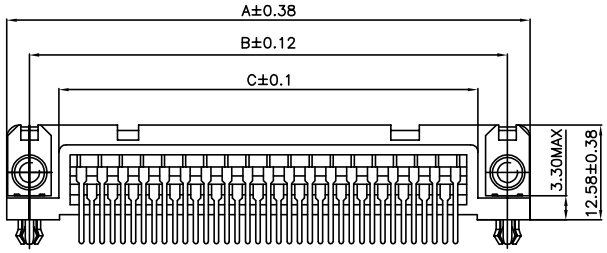

ACESSORY CODING EXTENSION :−(ID ** 33E4 GX ***)
EG:−ID 25S 33 E4 GX 001

37	69.32	63.50	55.68	54.71	49.68	ID37S33E4GX00
25	53.03	47.04	39.12	38.25	33.12	ID25S33E4GX00
15	39.14	33.32	25.18	24.54	19.18	ID15S33E4GX00
09	30.81	24.99	16.96	16.21	10.96	ID09S33E4GX00
SHELL	A±0.38	B±0.12	C±0.10	D +0.25 −0	E±0.07	PART NO.

TABLE-I

006	M 2.6	9.40	8630−01−049
005	UNC 440	9.40	8630−01−048
004	M 2.6	12.90	8630−01−039
003	UNC 440	12.90	8630−01−038
002	M3	12.90	8630−01−029
001	UNC 440	12.90	8630−01−028
* * * SPL.CODE	THREAD TYPE	L	REMARKS (ASSD.SCREW P/No.)

TABLE-II

TECHNICAL SPECIFICATIONS

MATERIAL

SHELL	:	STEEL TIN PLATED.
INSULATORS	:	SELF EXTINGUISHING BLACK POLYESTER, UL CLASS94V0
CONTACTS	:	COPPER ALLOY

PLATING

ACTIVE ZONE	:	GOLD OVER NICKEL
TERMINATION ZONE	:	SnPb over Ni
METAL BRACKET	:	BRASS,TIN PLATED.
SCREW LOCK	:	BRASS,TIN PLATED.
HARPOON	:	BRASS,TIN PLATED.
CLINCH NUT	:	BRASS,TIN PLATED.

ELECTRICAL DATA

MAX.CURRENT RATING	:	5A
TEST VOLTAGE	:	1000V
RATED VOLTAGE	:	300V
CONTACT RESISTANCE	:	≤25mΩ
SHELL RESISTANCE	:	≤5mΩ
INSULATION RESISTANCE	:	≥5000MΩ

ENVIRONMENTAL CHARACTERISTICS.

OPERATING TEMPERATURE RANGE	:	−55°C +125°C

MECHANICAL CHARACTERISTICS

MATING/UNMATING CYCLES	:	200 (FLASH Au) ; 500 (>0.4 μ Au)
INSERTION/EXTRACTION FORCE PER CONTACTS	:	5N MAX/0.3N MIN

ORDERING INFORMATION

I D 2 5 S 3 3 E 4 G X 0 0 0

SERIES

NO.OF CONTACTS
09,15,25,37,50

TYPE OF CONTACTS
P−PIN
S−SOCKET

TYPE OF TERMINATION
33−ANGLED SPILL
PITCH 2.84 USA
FOOT PRINT 8.08 USA

HEIGHT OF TERMINATION
E−3.18 US STANDARD

PLATING
4−>FLASH Au+Sn Pb
5−>0.4 μ Au+Sn Pb
6−>0.76 μ Au+Sn Pb

MOUNTING OPTIONS
PA−>STANDARD HOLE
PL−>THREADED INSERT M3
PX−>THREADED INSERT UNC 4.40
PV−>FEMALE SCREW LOCK UNC 4.40
GL−>HARPOON+INSERTM3+METAL BRACKET
GX−>HARPOON+INSERT UNC 4.40+METAL BRACKET
GV−>HARPOON+F.SCREW LOCK UNC 4.40+METAL BRACKET
UL−>INSERT M3+METAL BRACKET
UX−>INSERT UNC 4.40+METAL BRACKET
UV−>F.SCREW LOCK UNC 4.40+METAL BRACKET

SPECIAL CODE
00−>STANDARD
OTHERS−>SEE TABLE II ABOVE

INDEX	DATE	REVISION DESCRIPTION	CHD BY	APPD
B	2007−11−07	Format changed C/DD/0011		

ltr	ecn no	dr	date
A	-	MKV	1998-12-16
B	I07-0150	AS	2007-11-07

dr	ANISH SALAM	2007-11-05
engr	ANISH SALAM	2007-11-07
chr	ANISH SALAM	2007-11-07
appd	SUDHIR VARMA	2007-11-07

sheet index	revision sheet	A	B
		1	1

mat'l. code −
surface ISO 1302
tolerance ISO 406 ISO 1101
tolerances unless otherwise specified
angles linear
projection
MM
scale −

product family: DELTA-D
title: DELTA-D A/S FEMALE CONNECTOR (GX Ver.)
dwg no: C-DD-0032
sheet 1 of 1
size A3
type: Product Customer Drawing

form: A3

FCIconnect.com
Copyright FCI

PDM: Rev:B STATUS:Released Printed: Jan 18, 2011