# VIEWS FROM THE FRONT SIDE
# FEMALE

## 8 POLE

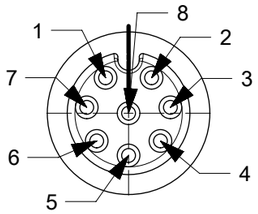


| Pin | Wire color |
|---|---|
| 1 | WH |
| 2 | BN |
| 3 | GN |
| 4 | YE |
| 5 | GY |
| 6 | PK |
| 7 | BU |
| 8 | RD |

## 5 POLE

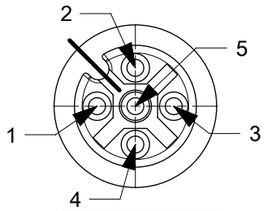


| Pin | Wire color |
|---|---|
| 1 | BN |
| 2 | WH |
| 3 | BU |
| 4 | BK |
| 5 | GY OR GN/YE |

## 4 POLE

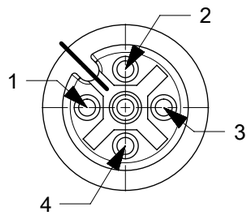


| Pin | Wire color |
|---|---|
| 1 | BN |
| 2 | WH |
| 3 | BU |
| 4 | BK |

## 3 POLE

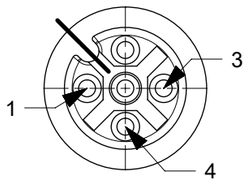


| Pin | Wire color |
|---|---|
| 1 | BN |
| 3 | BU |
| 4 | BK |

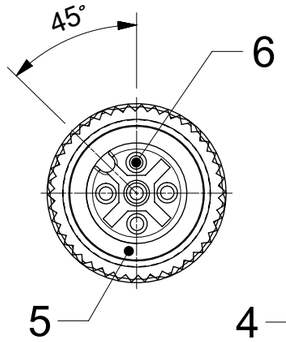


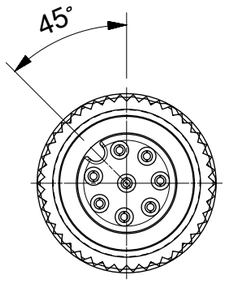


VIEWS FROM THE FRONT SIDE

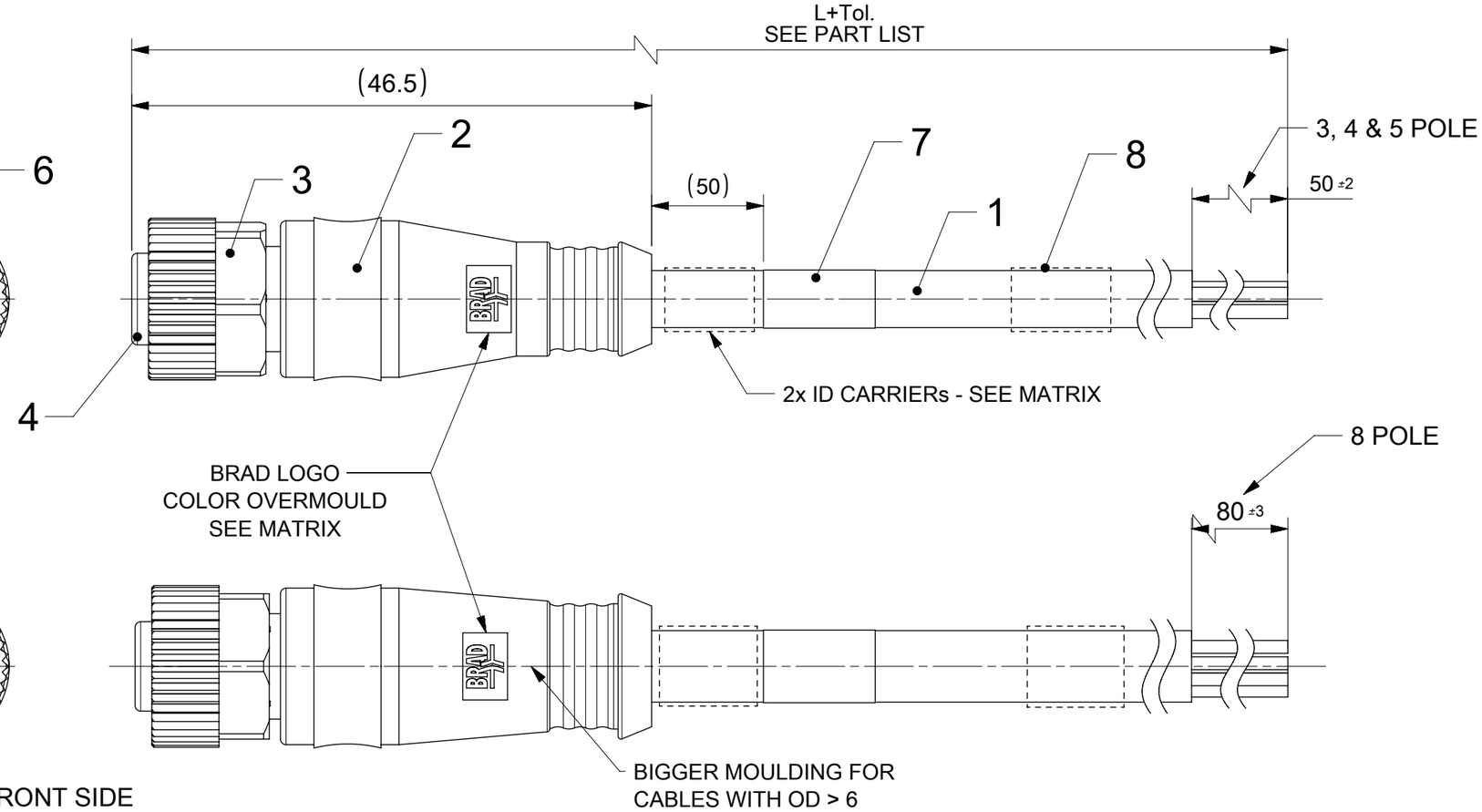


BILL OF MATERIAL

| ITEM | QTY. | DESCRIPTION | MATERIAL | FINISH/COLOR |
|---|---|---|---|---|
| 8 | 0/2 | I/D CARRIER | - | - |
| 7 | 1 | LABEL | VINYL | YELLOW |
| 6 | 3/4/5/8 | CONTACTS | BRASS | GOLD OVER Ni-PLATED |
| 5 | 1 | GASKET | FPM | RED |
| 4 | 1 | FEMALE INSERT | PUR | BLACK |
| 3 | 1 | COUPLING NUT | BRASS | Ni-PLATED |
| 2 | - | OVERMOULD | TPU | BLACK |
| 1 | - | CABLE | SEE CABLE LIST | SEE CABLE LIST |

NOTES:

TEMPERATURE RANGE : SEE CABLE LIST
RATED VOLTAGE: 3, 4 contacts : 250V
5 contacts : 60V
8 contacts : 30V
RATED CURRENT: 3, 4, 5 contacts : 4A
8 contacts : 2A

INSULATION RESISTANCE: $10^8$ Ω MIN.
MATING CYCLES: MIN. 100
ENVIRONMENTAL:PROTECTION: IP67 IN MATED AND LOCKED POSITION

THIS DRAWING CONTAINS INFORMATION THAT IS PROPRIETARY TO MOLEX ELECTRONIC TECHNOLOGIES, LLC AND SHOULD NOT BE USED WITHOUT WRITTEN PERMISSION

FUNCTIONAL SYMBOLS: F/A = 0, F/C = 0, F/P = 0
DIVISIONAL SYMBOLS

| DIMENSION UNITS | SCALE |
|---|---|
| mm | 2:1 |

GENERAL TOLERANCES (UNLESS SPECIFIED)

| | | |
|---|---|---|
| ANGULAR TOL | ± | 1.0 ° |
| 4 PLACES | ± | |
| 3 PLACES | ± | |
| 2 PLACES | ± | 0.05 |
| 1 PLACE | ± | 0.3 |
| 0 PLACES | ± | 0.5 |

DRAFT WHERE APPLICABLE MUST REMAIN WITHIN DIMENSIONS

CURRENT REV DESC: CABLE LIST INFORMATIONS ADDITED

EC NO: 788824
DRWN: RSCHIEBER 2024/06/07
CHK'D: RSILLER 2024/06/11
APPR: RSILLER 2024/06/11

INITIAL REVISION:
DRWN: SSM 2021/12/16
APPR: RSILLER 2022/02/28

THIRD ANGLE PROJECTION | DRAWING: A3-SIZE | SERIES: 120065

molex

CSE M12 XP AC FE STR WSOR XM SE UNSH BK

PRODUCT CUSTOMER DRAWING

| DOCUMENT NUMBER | DOC TYPE | DOC PART | REVISION |
|---|---|---|---|
| 1200652251 | PSD | 000 | B1 |

| MATERIAL NUMBER | CUSTOMER | SHEET NUMBER |
|---|---|---|
| SEE PART LIST | GENERAL MARKET | 1 OF 3 |

| DOCUMENT STATUS | P1 | RELEASE DATE | 2024/06/11 05:15:45 |
|---|---|---|---|

FORMAT: master-tb-prod-A3
REVISION: J1
DATE: 2021/05/01

# PART NO MATRIX

| 8 | 0 | X | 0 | 0 | 0 | B | X | X | X | X | X | X | X | X |
|---|---|---|---|---|---|---|---|---|---|---|---|---|---|---|
| | | | | | | | | | | | | | OPTIONS | |

80 = M12x1
SINGLE ENDED

POLES:
3 = 3 POLES
4 = 4 POLES
5 = 5 POLES
8 = 8 POLES

HEADER:
000 = FEMALE STRAIGHT

CABLE:
B30 = 0,34mm², TPU BLACK
B33 = 0,34mm², TPU GREY
B36 = 0,34mm², TPU ORANGE
B39 = 0,75mm², TPU BLACK
B41 = 0,25mm², TPU BLACK
B42 = 0,34mm², TPU BLACK
B49 = 0,25mm², TPU ORANGE
B55 = 0,34mm², TPU YELLOW

UNIT:
M = METER
C = CENTIMETER
T = 10 x METER

LENGTH:
EXAMPLE:
010 = 1 m
050 = 5 m
100 = 10 m

OVERMOLD COLOR:
BLANK (STANDARD) = BK
A = GY, G = BK, Y = YE, R = RD
COUPLING NUT:
BLANK (STANDARD)
= KNURLED/HEX BRASS, Ni PLATED
5 = KNURLED DERLIN
7 = KNURLED BRASS Ni PLATED,
TEFLON COATED
H = 2x ID CARRIERs
ALWAYS FOR CABLES B36)

# CABLE LIST

| CABLE TYPE | NO. OF WIRES | CROSS SECTION | CABLE JACKET | UL 21215 | CSA | ISO6722 | ISO14572 | STATIC: TEMP. / BENDING RADIUS | DYNAMIC: TEMP. / BENDING RADIUS | DRAG CHAIN | OTHER |
|---|---|---|---|---|---|---|---|---|---|---|---|
| B30 | 3 / 4 / 5 | 0.34mm² | TPU Black | YES | YES | YES | YES | -40°C to +90°C 5xO.D. | -25°C to +80°C 7.5xO.D. | up to 5 000 000 cycles at temp 20°C | WELD SLAG RESISTANCE |
| B41 | 8 | 0.25mm² | TPU Black | | | | | | | | |
| B42 | 5 | 0.34mm² | TPU Black | | | | | | | | |
| B33 | 4 / 5 | 0.34mm² | TPU Gray | | | | | | | | |
| B55 | 4 / 5 | 0.34mm² | TPU Yellow | | | | | | | | |
| B36 | 4 / 5 | 0.34mm² | TPU Orange | | | | | | | | |
| B39 | 5 | 0.34mm² | TPU Yellow | | | | | | | | |

## CABLE LENGTH TOLERANCES

| LENGTH | TOLERANCE |
|---|---|
| 0 m - 1 m | +40 mm |
| >1 m - 5 m | +60 mm |
| >5 m - 10 m | +80 mm |
| >10 m - 20 m | +140 mm |
| >20 m - 30 m | +160 mm |
| >30 m | +1% length |

THIS DRAWING CONTAINS INFORMATION THAT IS PROPRIETARY TO MOLEX ELECTRONIC TECHNOLOGIES, LLC AND SHOULD NOT BE USED WITHOUT WRITTEN PERMISSION

FUNCTIONAL SYMBOLS: A = 0, C = 0, D = 0
DIVISIONAL SYMBOLS

| DIMENSION UNITS | SCALE |
|---|---|
| mm | 1:1 |

GENERAL TOLERANCES (UNLESS SPECIFIED)

| | | |
|---|---|---|
| ANGULAR TOL | ± | 1.0 ° |
| 4 PLACES | ± | |
| 3 PLACES | ± | |
| 2 PLACES | ± | 0.05 |
| 1 PLACE | ± | 0.3 |
| 0 PLACES | ± | 0.5 |

DRAFT WHERE APPLICABLE MUST REMAIN WITHIN DIMENSIONS

CURRENT REV DESC: CABLE LIST INFORMATIONS ADDITED

EC NO: 788824
DRWN: RSCHIEBER 2024/06/07
CHK'D: RSILLER 2024/06/11
APPR: RSILLER 2024/06/11

INITIAL REVISION:
DRWN: SSM 2021/12/16
APPR: RSILLER 2022/02/28

THIRD ANGLE PROJECTION | DRAWING: A3-SIZE | SERIES: 120065

molex

CSE M12 XP AC FE STR WSOR XM SE UNSH BK

PRODUCT CUSTOMER DRAWING

| DOCUMENT NUMBER | DOC TYPE | DOC PART | REVISION |
|---|---|---|---|
| 1200652251 | PSD | 000 | B1 |

| MATERIAL NUMBER | CUSTOMER | SHEET NUMBER |
|---|---|---|
| SEE PART LIST | GENERAL MARKET | 2 OF 3 |

| DOCUMENT STATUS | P1 | RELEASE DATE | 2024/06/11 05:15:45 |
|---|---|---|---|

FORMAT: master-tb-prod-A3
REVISION: J1
DATE: 2021/05/01

# PART LIST

| MOLEX PN | ENGINEERING No | L [mm] |
|---|---|---|
| 3P CABLE B30 | | |
| 1200652247 | 803000B30M010 | 1000 |
| 1200652248 | 803000B30M020 | 2000 |
| 1200652249 | 803000B30M050 | 5000 |
| 1200652250 | 803000B30M100 | 10000 |
| 1200659784 | 803000B30M200 | 20000 |
| 4P CABLE B30 | | |
| 1200652251 | 804000B30M010 | 1000 |
| 1200652388 | 804000B30M010R | 1000 |
| 1200652252 | 804000B30M020 | 2000 |
| 1200659466 | 804000B30M030 | 3000 |
| 1200659639 | 804000B30M030R | 3000 |
| 1200652253 | 804000B30M050 | 5000 |
| 1200659805 | 804000B30M075 | 7500 |
| 1200659788 | 804000B30M085 | 8500 |
| 1200659806 | 804000B30M098 | 9800 |
| 1200652254 | 804000B30M100 | 10000 |
| 1200659400 | 804000B30M150 | 15000 |
| 1200659467 | 804000B30M200 | 20000 |
| 1200659468 | 804000B30M250 | 25000 |
| 1200659469 | 804000B30M300 | 30000 |
| 5P CABLE B30 | | |
| 1200659963 | 805000B30M006 | 600 |
| 1200659518 | 805000B30M010 | 1000 |
| 1200659519 | 805000B30M020 | 2000 |
| 1200659984 | 805000B30M0207 | 2000 |
| 1200656650 | 805000B30M030 | 3000 |
| 1200659520 | 805000B30M050 | 5000 |
| 1200659521 | 805000B30M100 | 10000 |
| 1200656214 | 805000B30M150 | 15000 |
| 1200656483 | 805000B30M200 | 20000 |

| MOLEX PN | ENGINEERING No | L [mm] |
|---|---|---|
| 4P CABLE B33 | | |
| 1200659966 | 804000B33M005 | 500 |
| 1200656515 | 804000B33M005A | 500 |
| 1200659967 | 804000B33M010 | 1000 |
| 1200656516 | 804000B33M010A | 1000 |
| 1200659456 | 804000B33M020 | 2000 |
| 1200656517 | 804000B33M020A | 2000 |
| 1200659968 | 804000B33M030 | 3000 |
| 1200656518 | 804000B33M030A | 3000 |
| 1200659969 | 804000B33M040 | 4000 |
| 1200659970 | 804000B33M050 | 5000 |
| 1200656519 | 804000B33M050A | 5000 |
| 1200659461 | 804000B33M100 | 10000 |
| 1200656520 | 804000B33M100A | 10000 |
| 1200656605 | 804000B33M150A | 15000 |
| 1200656606 | 804000B33M200A | 20000 |
| 1200657125 | 804000B33M300A | 30000 |
| 1200657126 | 804000B33M400A | 40000 |
| 1200657127 | 804000B33M500A | 50000 |
| 1200657128 | 804000B33M700A | 70000 |
| 5P CABLE B33 | | |
| 1200657176 | 805000B33M005A | 500 |
| 1200656643 | 805000B33M010A | 1000 |
| 1200659457 | 805000B33M020 | 2000 |
| 1200656644 | 805000B33M020A | 2000 |
| 1200656645 | 805000B33M030A | 3000 |
| 1200656646 | 805000B33M050A | 5000 |
| 1200659462 | 805000B33M100 | 10000 |
| 1200656647 | 805000B33M100A | 10000 |
| 1200656648 | 805000B33M150A | 15000 |
| 1200656649 | 805000B33M200A | 20000 |
| 1200657177 | 805000B33M300A | 30000 |
| 1200657178 | 805000B33M400A | 40000 |
| 1200657179 | 805000B33M500A | 50000 |

| MOLEX PN | ENGINEERING No | L [mm] |
|---|---|---|
| 4P CABLE B36 | | |
| 1200656851 | 804000B36M0107Y | 1000 |
| 1200656388 | 804000B36M0207H | 2000 |
| 1200659429 | 804000B36M0207Y | 2000 |
| 1200656389 | 804000B36M0507H | 5000 |
| 1200659430 | 804000B36M0507Y | 5000 |
| 1200656390 | 804000B36M1007H | 10000 |
| 1200659431 | 804000B36M1007Y | 10000 |
| 1200656550 | 804000B36M1507Y | 15000 |
| 1200656551 | 804000B36M2007Y | 20000 |
| 5P CABLE B36 | | |
| 1200656835 | 805000B36M1007Y | 10000 |
| 5P CABLE B39 | | |
| 1200656042 | 805000B39M050 | 5000 |
| 5P CABLE B42 | | |
| 1200656062 | 805000B42M005 | 500 |
| 1200652255 | 805000B42M010 | 1000 |
| 1200652256 | 805000B42M020 | 2000 |
| 1200652257 | 805000B42M050 | 5000 |
| 1200652258 | 805000B42M100 | 10000 |
| 1200659543 | 805000B42M200 | 20000 |
| 1200659544 | 805000B42M300 | 30000 |
| 8P CABLE B41 | | |
| 1200652306 | 808000B41M010 | 1000 |
| 1200652393 | 808000B41M010R | 1000 |
| 1200659458 | 808000B41M020 | 2000 |
| 1200659777 | 808000B41M030 | 3000 |
| 1200652308 | 808000B41M050 | 5000 |
| 1200659463 | 808000B41M100 | 10000 |
| 1200656044 | 808000B41M150 | 15000 |
| 1200659734 | 808000B41M200 | 20000 |
| 1200656485 | 808000B41M250 | 25000 |

| MOLEX PN | ENGINEERING No | L [mm] |
|---|---|---|
| 4P CABLE B55 | | |
| 1200656620 | 804000B55M010Y | 1000 |
| 1200656621 | 804000B55M020Y | 2000 |
| 1200656622 | 804000B55M030Y | 3000 |
| 1200656623 | 804000B55M050Y | 5000 |
| 1200656624 | 804000B55M100Y | 10000 |
| 1200656625 | 804000B55M150Y | 15000 |
| 1200656626 | 804000B55M200Y | 20000 |
| 5P CABLE B55 | | |
| 1200656651 | 805000B55M010Y | 1000 |
| 1200656652 | 805000B55M020Y | 2000 |
| 1200656653 | 805000B55M030Y | 3000 |
| 1200656654 | 805000B55M050Y | 5000 |
| 1200656655 | 805000B55M100Y | 10000 |
| 1200656656 | 805000B55M150Y | 15000 |
| 1200656657 | 805000B55M200Y | 20000 |

THIS DRAWING CONTAINS INFORMATION THAT IS PROPRIETARY TO MOLEX ELECTRONIC TECHNOLOGIES, LLC AND SHOULD NOT BE USED WITHOUT WRITTEN PERMISSION

FUNCTIONAL SYMBOLS: FA = 0, FC = 0, FP = 0

DIVISIONAL SYMBOLS

DIMENSION UNITS: mm
SCALE: 1:1

GENERAL TOLERANCES (UNLESS SPECIFIED)

| | | |
|---|---|---|
| ANGULAR TOL | ± | 1.0 ° |
| 4 PLACES | ± | |
| 3 PLACES | ± | |
| 2 PLACES | ± | 0.05 |
| 1 PLACE | ± | 0.3 |
| 0 PLACES | ± | 0.5 |

DRAFT WHERE APPLICABLE MUST REMAIN WITHIN DIMENSIONS

CURRENT REV DESC: CABLE LIST INFORMATIONS ADDITED

EC NO: 788824
DRWN: RSCHIEBER 2024/06/07
CHK'D: RSILLER 2024/06/11
APPR: RSILLER 2024/06/11

INITIAL REVISION:
DRWN: SSM 2021/12/16
APPR: RSILLER 2022/02/28

THIRD ANGLE PROJECTION

DRAWING: A3-SIZE
SERIES: 120065

molex

CSE M12 XP AC FE STR WSOR XM SE UNSH BK

PRODUCT CUSTOMER DRAWING

| DOCUMENT NUMBER | DOC TYPE | DOC PART | REVISION |
|---|---|---|---|
| 1200652251 | PSD | 000 | B1 |

MATERIAL NUMBER:
CUSTOMER: GENERAL MARKET
SHEET NUMBER: 3 OF 3

| DOCUMENT STATUS | P1 | RELEASE DATE | 2024/06/11 05:15:45 |
|---|---|---|---|

FORMAT: master-tb-prod-A3
REVISION: J1
DATE: 2021/05/01

NOTES:
RATED VOLTAGE:
3, 4 contacts 250V
5 contacts 60V
8 contacts 30V
RATED CURRENT:
3, 4, 5 contacts 4A
8 contacts 2A
PROTECTION CLASS: IP 67

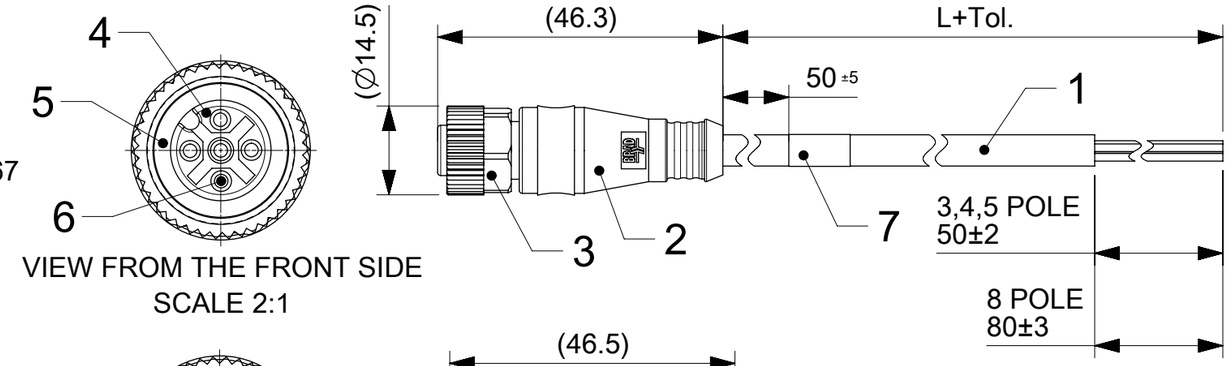


VIEW FROM THE FRONT SIDE
SCALE 2:1

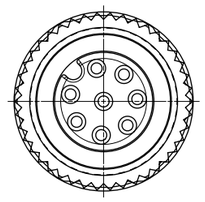

VIEW FROM THE FRONT SIDE
SCALE 2:1

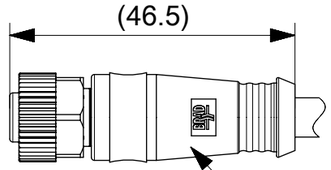


Thicker Overmould for Cables with bigger Outer Diameter

CONTACTS POSITION FRONT VIEW:

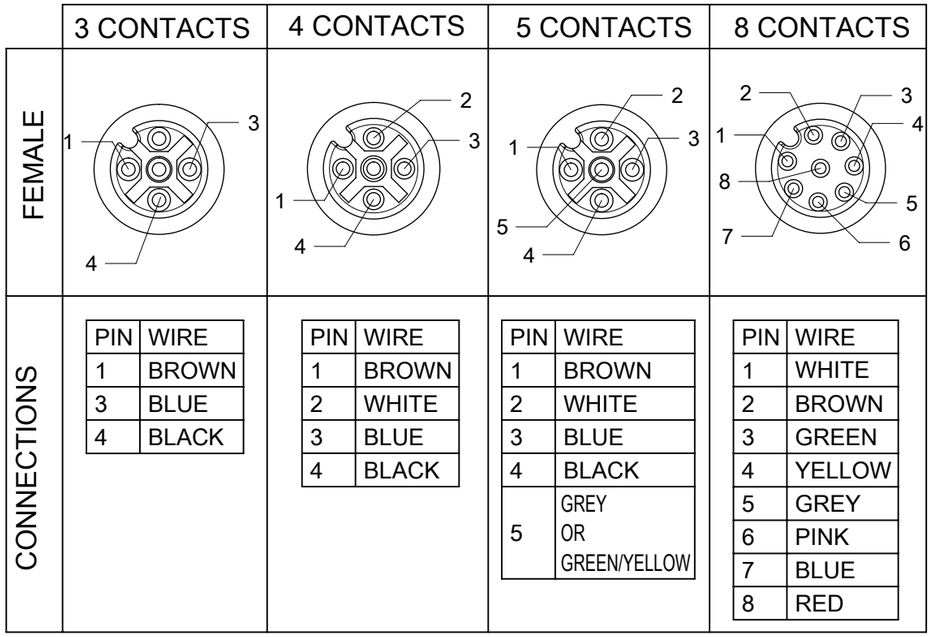


| PIN | WIRE |
|---|---|
| 1 | BROWN |
| 3 | BLUE |
| 4 | BLACK |

| PIN | WIRE |
|---|---|
| 1 | BROWN |
| 2 | WHITE |
| 3 | BLUE |
| 4 | BLACK |

| PIN | WIRE |
|---|---|
| 1 | BROWN |
| 2 | WHITE |
| 3 | BLUE |
| 4 | BLACK |
| 5 | GREY OR GREEN/YELLOW |

| PIN | WIRE |
|---|---|
| 1 | WHITE |
| 2 | BROWN |
| 3 | GREEN |
| 4 | YELLOW |
| 5 | GREY |
| 6 | PINK |
| 7 | BLUE |
| 8 | RED |

FOR OPTION SEE - NUMERICAL CODE - ON SHEET 2

| ITEM | QTY. | DESCRIPTION | MATERIAL | FINISH |
|---|---|---|---|---|
| 7 | 1 | LABEL YE | VINYL | - |
| 6 | 3/4/5/8 | CONTACT FE | BRASS | GOLD OVER Ni-PLATED |
| 5 | 1 | GASKET RD | FPM | - |
| 4 | 1 | INSERT M12 FE XP BK | PUR | - |
| 3 | 1 | COUPLING NUT M12 FE | SEE SHEET 2 | SEE SHEET 2 |
| 2 | - | OVERMOULDING | SEE SHEET 2 | SEE SHEET 2 |
| 1 | - | CABLE | SEE SHEET 2 | - |

THIS DRAWING CONTAINS INFORMATION THAT IS PROPRIETARY TO MOLEX ELECTRONIC TECHNOLOGIES, LLC AND SHOULD NOT BE USED WITHOUT WRITTEN PERMISSION

FUNCTIONAL SYMBOLS
FA = 0
FC = 0
FP = 0
DIVISIONAL SYMBOLS

DIMENSION UNITS: mm
SCALE: 1:1
GENERAL TOLERANCES (UNLESS SPECIFIED)
ANGULAR TOL ± °
4 PLACES ±
3 PLACES ±
2 PLACES ±
1 PLACE ±
0 PLACES ±
DRAFT WHERE APPLICABLE MUST REMAIN WITHIN DIMENSIONS

CURRENT REV DESC: STANDARDIZATION
EC NO: 681756
DRWN: MKOWALCZYK01 2021/10/18
CHK'D: ALEKSP3 2021/10/18
APPR: KMARCINIAK01 2021/10/18
INITIAL REVISION:
DRWN: AKONDRACIUK 2016/11/26
APPR: MIWASIECZKO 2016/12/06

molex

CSE M12 XP AC FE STR WSOR XM SE UNSH

PRODUCT CUSTOMER DRAWING

| DOCUMENT NUMBER | DOC TYPE | DOC PART | REVISION |
|---|---|---|---|
| 1200652251 | PSD | 00P | B2 |

| THIRD ANGLE PROJECTION | DRAWING | SERIES | MATERIAL NUMBER | CUSTOMER | SHEET NUMBER |
|---|---|---|---|---|---|
| | A3-SIZE | 120065 | SEE PART LIST | | 1 OF 2 |

| DOCUMENT STATUS | P1 | RELEASE DATE | 2021/10/18 12:08:57 |
|---|---|---|---|

FORMAT: master-tb-prod-A3
REVISION: J1
DATE: 2021/05/01

# ENGINEERING NO - NUMERICAL CODE (Available parts see PART LIST table. Other parts available upon request).

| 8 | 0 | X | 0 | 0 | 0 | B | X | X | M | X | X | X | X |
|---|---|---|---|---|---|---|---|---|---|---|---|---|---|
| | | | | | | | | | | | | | OPTIONS |

88 = M12x1
SINGLE ENDED

POLES:
3 = 3 POLES
4 = 4 POLES
5 = 5 POLES
8 = 8 POLES

HEADER:
000 = PLUG FEMALE STRARIGHT

CABLE TYPE:
SEE TABLE

UNIT:
M = METER

LENGTH:
EXAMPLE:
010 = 1 m
050 = 5 m
100 = 10 m

Overmold color:
Blank (Standard)=Black
A=Grey / G=Black / Y=Yellow / R=Red

Coupling Nut:
Blank (Standard)=Knurled/Hex Brass, Ni Plated
5=Knurled Derlin
7=Knurled Brass Ni Plated, Teflon Coated

H= 2 pcs. of I/D Carrier PVC Transparent
(Cables B36 always with
2 pcs. I/D Carrier)

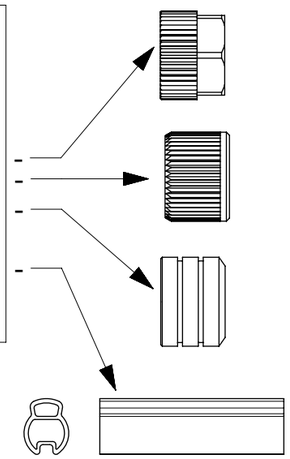

## CABLE INFORMATION (for more information see Cable Data Sheet).

| CABLE TYPE | NO. OF WIRES | CROSS SECTION | CABLE JACKET | UL | CSA | STATIC: TEMP. / BENDING RADIUS | DYNAMIC: TEMP. / BENDING RADIUS | DRAG CHAIN: TEMP. / BENDING RADIUS | DRAG CHAIN | CABLE SPEC. DRAWING |
|---|---|---|---|---|---|---|---|---|---|---|
| B30 | 3 / 4 / 5 | 0.34mm² | TPU Black | UL 21215/758 | C22.2 I/II A/B 80°/600V | -40°C to +90°C 5xO.D. | -25°C to +80°C 7.5xO.D. | -5°C to +60°C 7.5xO.D. | up to 5 000 000 cycles at temp 20°C | SD-120209-001 |
| B33 | 4 / 5 | 0.34mm² | TPU Gray | | | | | | | SD-120209-001 |
| B36 | 4 / 5 | 0.34mm² | TPU Orange | | | | | | | SD-120209-001 |
| B39 | 5 | 0.75mm² | TPU Gray | | | | | | | n/a |
| B41 | 8 | 0.25mm² | TPU Black | | | | | | | SD-120209-006 |
| B42 | 5 | 0.34mm² | TPU Black | | | | | | | SD-120209-001 |
| B49 | 8 | 0.25mm² | TPU Orange | | | | | | | SD-120209-006 |
| B55 | 3 / 4 / 5 | 0.34mm² | TPU Yellow | | | | | | | n/a |

| TABLE OF LENGTH TOLERANCES | | |
|---|---|---|
| OVER | UP TO AND INCLUDING | TOLERANCE |
| 0 | 1000 | +40 0 |
| 1000 | 5000 | +60 0 |
| 5000 | 10000 | +80 0 |
| 10000 | 20000 | +140 0 |
| 20000 | 30000 | +160 0 |
| 30000 | > | +1% OF LENGTH |

| DOCUMENT STATUS | P1 | RELEASE DATE | 2021/10/18 12:08:57 |
|---|---|---|---|

FORMAT: master-tb-prod-A3
REVISION: J1
DATE: 2021/05/01

THIS DRAWING CONTAINS INFORMATION THAT IS PROPRIETARY TO MOLEX ELECTRONIC TECHNOLOGIES, LLC AND SHOULD NOT BE USED WITHOUT WRITTEN PERMISSION

FUNCTIONAL SYMBOLS
FA = 0
FC = 0
FP = 0

DIVISIONAL SYMBOLS

| DIMENSION UNITS | SCALE |
|---|---|
| mm | 1:1 |

GENERAL TOLERANCES (UNLESS SPECIFIED)

| | |
|---|---|
| ANGULAR TOL | ± ° |
| 4 PLACES | ± |
| 3 PLACES | ± |
| 2 PLACES | ± |
| 1 PLACE | ± |
| 0 PLACES | ± |

DRAFT WHERE APPLICABLE MUST REMAIN WITHIN DIMENSIONS

CURRENT REV DESC: STANDARDIZATION

EC NO: 681756
DRWN: MKOWALCZYK01 2021/10/18
CHK'D: ALEKSP3 2021/10/18
APPR: KMARCINIAK01 2021/10/18

INITIAL REVISION:
DRWN: AKONDRACIUK 2016/11/26
APPR: MIWASIECZKO 2016/12/06

THIRD ANGLE PROJECTION | DRAWING: A3-SIZE | SERIES: 120065

molex

CSE M12 XP AC FE STR WSOR XM SE UNSH

PRODUCT CUSTOMER DRAWING

| DOCUMENT NUMBER | DOC TYPE | DOC PART | REVISION |
|---|---|---|---|
| 1200652251 | PSD | 00P | B2 |

MATERIAL NUMBER: SEE PART LIST | CUSTOMER | SHEET NUMBER: 2 OF 2