PART NAME: KNOB	SCALE: 1:1	DATE: 5/30/17	DR. BY JD

THIS DRAWING IS THE PROPERTY OF DAVIES MOLDING COMPANY, IS SUBMITTED SOLELY AS A DESIGN OR ENGINEERING PROJECT. WE ACCEPT NO RESPONSIBILITY WHATSOEVER FOR THE PRACTICAL APPLICATION OF THE PIECES MADE TO THIS DESIGN.

DAVIES MOLDING — DESIGNERS & MANUFACTURERS OF KNOBS, HANDLES, CASES & CUSTOM PLASTIC COMPONENTS

P/N	3022BK
M NO.	1475
CAVITY	3022
PLUNGER	3022
PLUNGER PIN	3022
OUTER PIN	3025-3
INNER PIN	3022BJ
SHIMS	.250+.250+.047
PIN BAR	1475
INSERT	I2510
PLUNGER KEY	1/4x1/4x7/16
CAVITY KEY	1/4x1/4x1/2

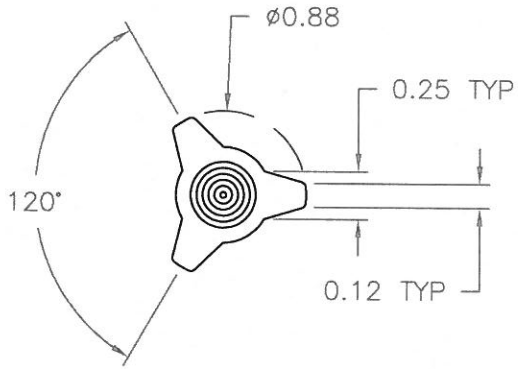

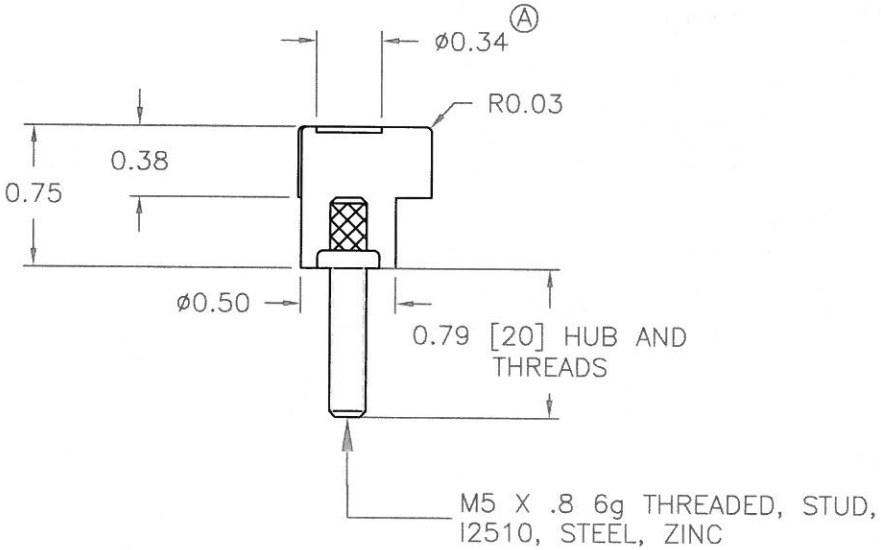

MATERIAL: G.P. PHENOLIC (B11)
COLOR: BLACK

TOLERANCES: UNLESS OTHERWISE SPECIFIED	DO NOT SCALE DRAWING				
DECIMALS: X.XXX ± .005 X.XX ± .015	MM: X.XX ± 0.15MM X.X ± 0.4MM				
FRACTIONS ± 1/64	ANG. ± 1°	CHANGES			