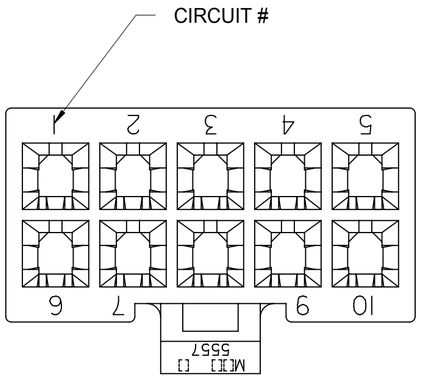

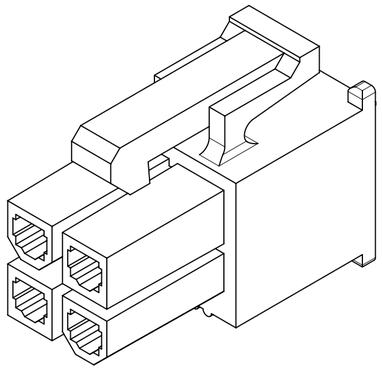

4 CKT SHOWN

NOTES:

1) MATERIAL:
   225S = NYLON 6, UL94V-2, GLOW WIRE MATERIAL COLOR: BLACK
   225NS = NYLON 6, UL94V-2, GLOW WIRE MATERIAL COLOR: NATURAL
   250RS = NYLON 6/6, UL94V-0, GLOW WIRE MATERIAL COLOR: RED
   250GS = NYLON 6/6, UL94V-0, GLOW WIRE MATERIAL COLOR: GREEN
   250BS = NYLON 6/6, UL94V-0, GLOW WIRE MATERIAL COLOR: BLUE
   250WS = NYLON 6/6, UL94V-0, GLOW WIRE MATERIAL COLOR: NATURAL
2) FINISH: NOT APPLICABLE
3) PRODUCT SPECIFICATION: PS-5556-001
4) PACKAGING: BULK
5) PART MATES WITH MOLEX PLUG #46993 AND HEADERS #172447, #172448.
6) PART TO BE USED WITH MOLEX FEMALE TERMINAL #5556,#45750,#46018.
7) PART IS NOT DESIGNED FOR CURRENT SHARING.
8) CONNECTORS ARE NOT TO BE MATED OR UNMATED WHILE CIRCUITS ARE LIVE.
9) WIRES ARE TO BE DRESSED IN SUCH A MANNER TO ALLOW THE TERMINALS TO FLOAT FREELY IN THE POCKET.
10) PART CONFORMS TO CLASS "B" REQUIREMENTS OF COSMETIC SPECIFICATION PS-45499-002 WITH THE EXCEPTION OF DISCOLORATION, FLASH AND SINK MEET CLASS "C" REQUIREMENTS.
11) TO BE MEASURED AT SURFACE Z
12) TEXT ON PART IS FOR REFERENCE ONLY. TEXT AND TEXT LOCATION MAY VARY DEPENDING ON PART NUMBER AND/OR TOOL.
13) APPLICATION SPECIFICATION :469920000-AS.
14) BUBBLE IS ACCEPTABLE ON LATCH AREA.

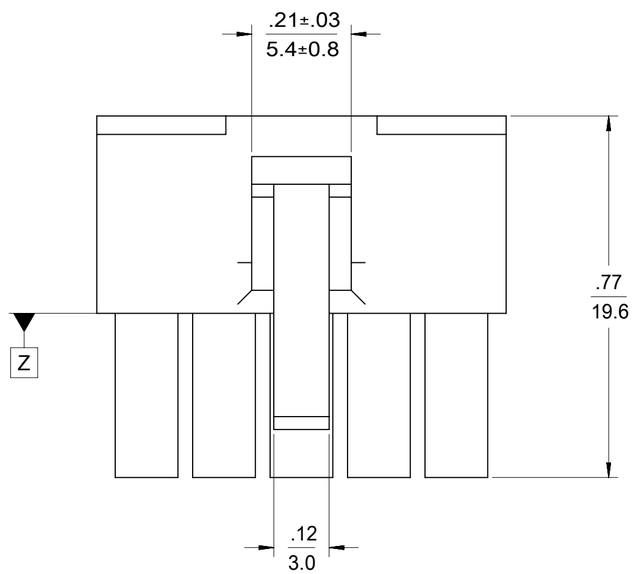

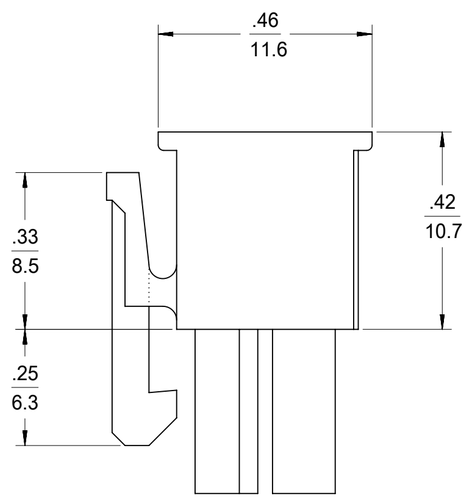

4-24 CKT

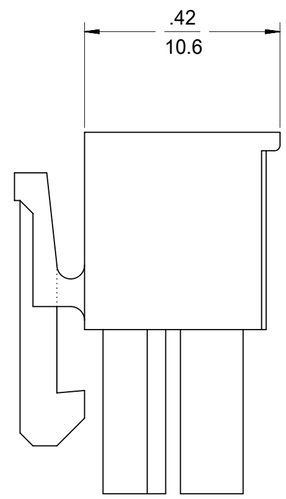

2 CKT ONLY

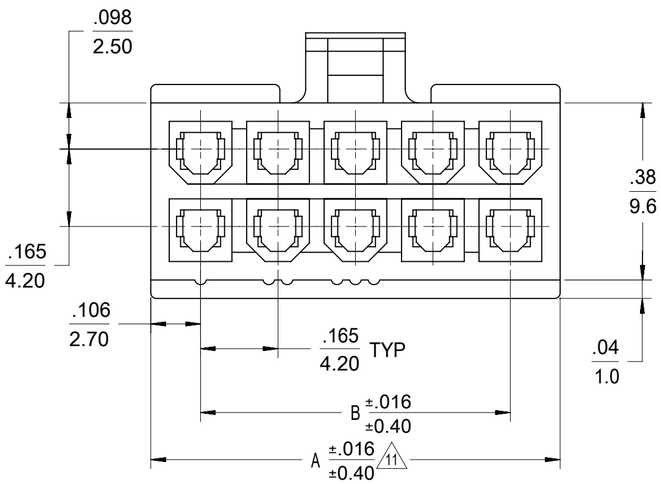

LEGEND

46992 -XXX 0

CIRCUIT SIZE

MATERIAL
(SEE NOTE 1)
0 = 225NS
1 = 225S
2 = 250RS
3 = 250GS
4 = 250BS
5 = 250WS

CONFIGURATION
DUAL ROW

THIS DRAWING CONTAINS INFORMATION THAT IS PROPRIETARY TO MOLEX ELECTRONIC TECHNOLOGIES, LLC AND SHOULD NOT BE USED WITHOUT WRITTEN PERMISSION

DIMENSION UNITS	SCALE
mm	NTS

GENERAL TOLERANCES (UNLESS SPECIFIED)

	MM	INCH
4 PLACES	±	±
3 PLACES	±	± 0.01
2 PLACES	± 0.25	± 0.015
1 PLACE	± 0.38	±
0 PLACES	±	±
ANGULAR TOL	± 3.0 °	

DRAFT WHERE APPLICABLE MUST REMAIN WITHIN DIMENSIONS

CURRENT REV DESC:

EC NO: 776137
DRWN: JERRYW8 2024/02/01
CHK'D: XQZHANG 2024/02/22
APPR: XQZHANG 2024/02/22

INITIAL REVISION:
DRWN: NNGUYEN 2013/04/12
APPR: FSMITH 2014/05/16

molex

MINIFIT JR
RECEPTACLE HOUSING DUAL ROW, 2-24 CKT

PRODUCT CUSTOMER DRAWING

DOCUMENT NUMBER	DOC TYPE	DOC PART	REVISION
SD-46992-0000	PSD	000	A10

THIRD ANGLE PROJECTION	DRAWING	SERIES	MATERIAL NUMBER	CUSTOMER	SHEET NUMBER
	C-SIZE	46992	SEE TABLE	GENERAL MARKET	1 OF 2

DOCUMENT STATUS	P1	RELEASE DATE	2024/02/22 08:10:02

FORMAT: Eng-lega-master-B-prod-C
REVISION: E1
DATE: 2021/05/01

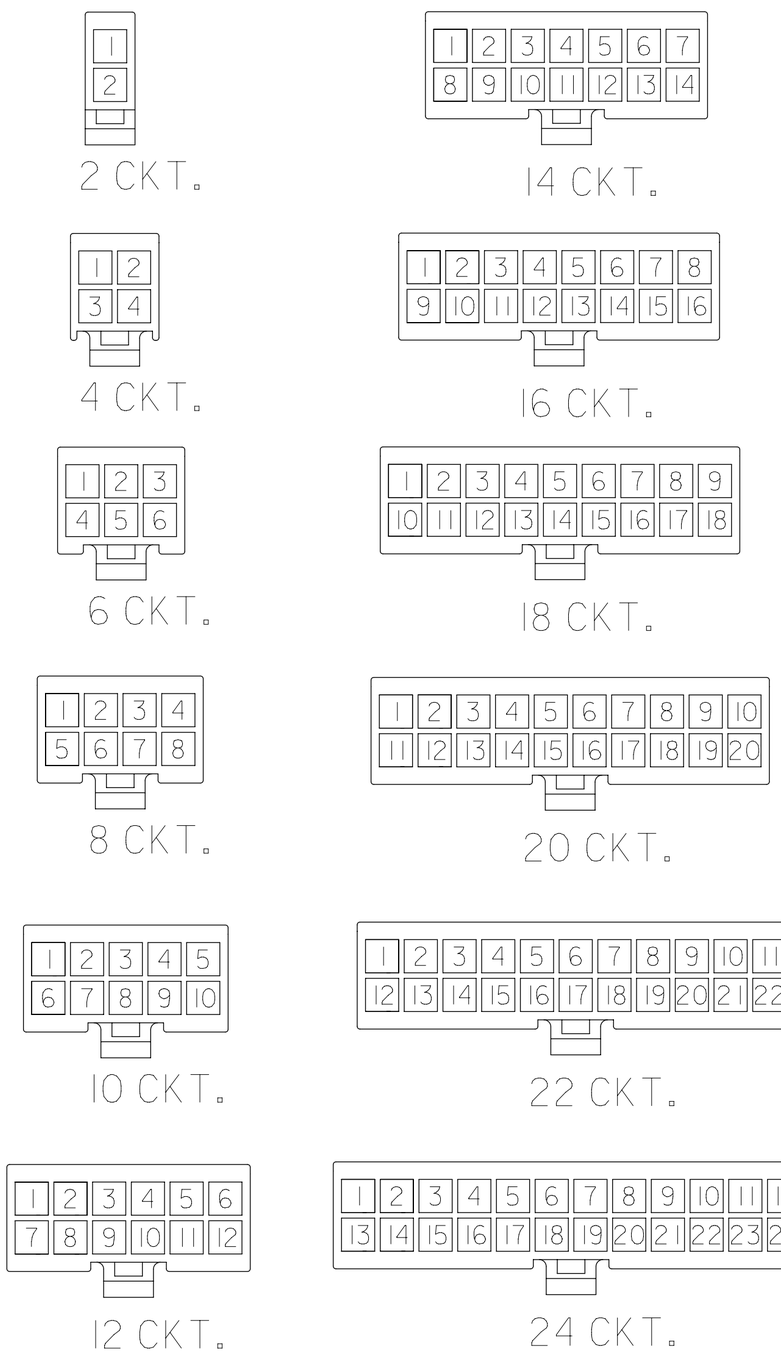

CIRCUIT SIZE LAYOUT
(NOT TO SCALE)

PART NUMBER		CKT SIZE	DIM "A"	DIM "B"	MATERIAL CODE & COLOR ⚠1
46992-0240		02	.21/5.40	--	250BS BLUE (V0)
46992-0440		04	.38/9.60	.165/4.20	
46992-0640		06	.54/13.8	.331/8.40	
46992-0840		08	.71/18.0	.496/12.60	
46992-1040		10	.87/22.2	.661/16.8	
46992-1240		12	1.04/26.4	.827/21.00	
46992-0250		02	.21/5.40	--	250WS NATURAL (V0)
46992-0450		04	.38/9.60	.165/4.20	
46992-0650		06	.54/13.8	.331/8.40	
46992-0850		08	.71/18.0	.496/12.60	
46992-1050		10	.87/22.2	.661/16.8	
46992-1250		12	1.04/26.4	.827/21.00	

PART NUMBER		CKT SIZE	DIM "A"	DIM "B"	MATERIAL CODE & COLOR ⚠1
46992-0200		02	.21/5.40	--	225NS NATURAL (V2)
46992-0400		04	.38/9.60	.165/4.20	
46992-0600		06	.54/13.8	.331/8.40	
46992-0800		08	.71/18.0	.496/12.60	
46992-1000		10	.87/22.2	.661/16.8	
46992-1200		12	1.04/26.4	.827/21.00	
46992-1400		14	1.21 / 30.6	.992/25.20	
46992-1600		16	1.37 / 34.8	1.158/29.40	
46992-1800		18	1.54 / 39.0	1.323/33.60	
46992-2000	X	20	1.70 / 43.2	1.488/37.80	
46992-2200	X	22	1.87 / 47.4	1.654/42.00	
46992-2400	X	24	2.03 / 51.6	1.819/46.20	
46992-0210		02	.21/5.40	--	225S BLACK (V2)
46992-0410		04	.38/9.60	.165/4.20	
46992-0610		06	.54/13.8	.331/8.40	
46992-0810		08	.71/18.0	.496/12.60	
46992-1010		10	.87/22.2	.661/16.8	
46992-1210		12	1.04/26.4	.827/21.00	
46992-1410		14	1.21 / 30.6	.992/25.20	
46992-1610		16	1.37 / 34.8	1.158/29.40	
46992-1810		18	1.54 / 39.0	1.323/33.60	
46992-2010	X	20	1.70 / 43.2	1.488/37.80	
46992-2210	X	22	1.87 / 47.4	1.654/42.00	
46992-2410		24	2.03 / 51.6	1.819/46.20	
46992-0220		02	.21/5.40	--	250RS RED (V0)
46992-0420		04	.38/9.60	.165/4.20	
46992-0620		06	.54/13.8	.331/8.40	
46992-0820		08	.71/18.0	.496/12.60	
46992-1020		10	.87/22.2	.661/16.8	
46992-1220		12	1.04/26.4	.827/21.00	
46992-0230		02	.21/5.40	--	250GS GREEN (V0)
46992-0430		04	.38/9.60	.165/4.20	
46992-0630		06	.54/13.8	.331/8.40	
46992-0830		08	.71/18.0	.496/12.60	
46992-1030		10	.87/22.2	.661/16.8	
46992-1230		12	1.04/26.4	.827/21.00	

X = NOT TOOLED

THIS DRAWING CONTAINS INFORMATION THAT IS PROPRIETARY TO MOLEX ELECTRONIC TECHNOLOGIES, LLC AND SHOULD NOT BE USED WITHOUT WRITTEN PERMISSION

DIMENSION UNITS	SCALE
mm	NTS

GENERAL TOLERANCES (UNLESS SPECIFIED)

	MM	INCH
4 PLACES	±	±
3 PLACES	±	± 0.01
2 PLACES	± 0.25	± 0.015
1 PLACE	± 0.38	±
0 PLACES	±	±
ANGULAR TOL	± 3.0 °	

DRAFT WHERE APPLICABLE MUST REMAIN WITHIN DIMENSIONS

CURRENT REV DESC: CONT

EC NO: 776137
DRWN: JERRYW8 2024/02/01
CHK'D: XQZHANG 2024/02/22
APPR: XQZHANG 2024/02/22

INITIAL REVISION:
DRWN: NNGUYEN 2013/04/12
APPR: FSMITH 2014/05/16

THIRD ANGLE PROJECTION | DRAWING: C-SIZE | SERIES: 46992

molex

MINIFIT JR
RECEPTACLE HOUSING DUAL ROW, 2-24 CKT

PRODUCT CUSTOMER DRAWING

DOCUMENT NUMBER	DOC TYPE	DOC PART	REVISION
SD-46992-0000	PSD	000	A10

MATERIAL NUMBER	CUSTOMER	SHEET NUMBER
SEE TABLE	GENERAL MARKET	2 OF 2

DOCUMENT STATUS	P1	RELEASE DATE	2024/02/22 08:10:02

FORMAT: Eng-legs-master-tb-prod-C
REVISION: E1
DATE: 2021/05/01