THIS DRAWING IS UNPUBLISHED. RELEASED FOR PUBLICATION 20
© COPYRIGHT20 BY - ALL RIGHTS RESERVED.

REVISIONS					
F	LTR	DESCRIPTION	DATE	DWN	APVD
	E2	MCP 1.5. 1534334 ADDED	20JUL2004	RD	BL
	F1	Aufnahmegeh. optimiert	17OCT2008	RD	MZ
	F2	Drawing update	26MAY2014	GB	ScZ
	F3	ECR-15-001938	06FEB2015	JBJH	GB

2 MCP HOUSING
MCP Gehaeuse (F3)

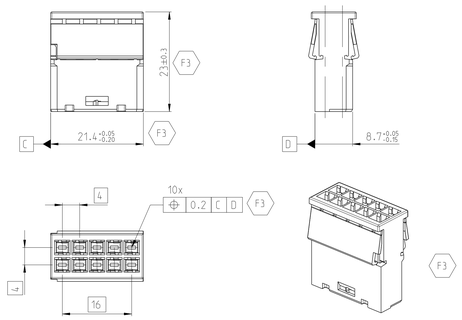

4 COVER AND LEVER
Abdeckkappe und Hebel (F3)

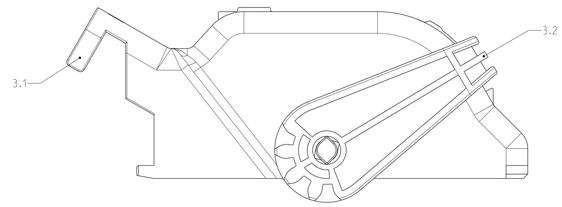

3 COVER AND LEVER
Abdeckkappe und Hebel (F3)

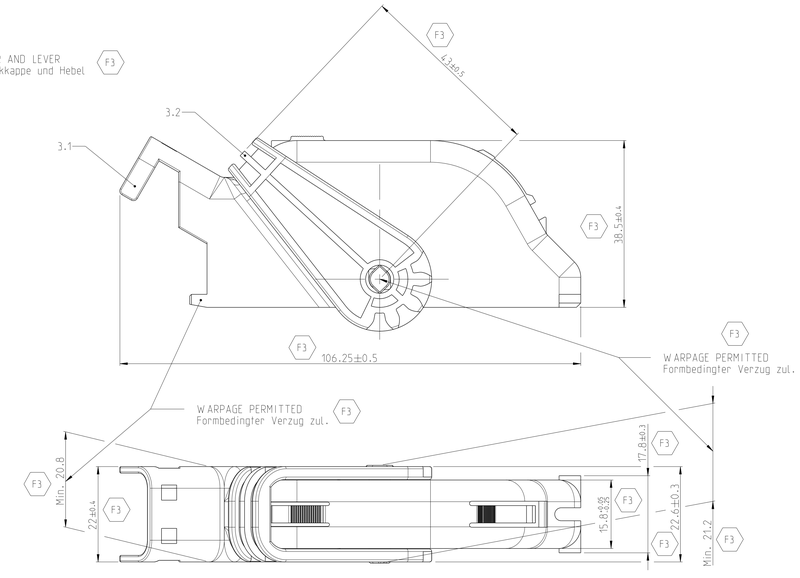

5 BRACKET HOUSING ASSY.
Traeger haeuse kompl (F3)

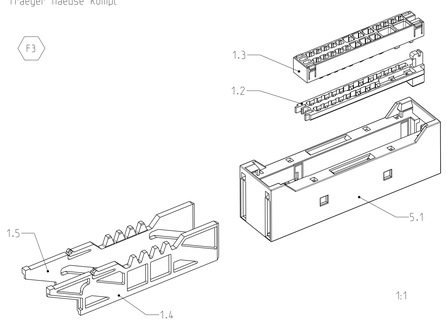

1 BRACKET HOUSING ASSY.
Traeger haeuse kompl (F3)

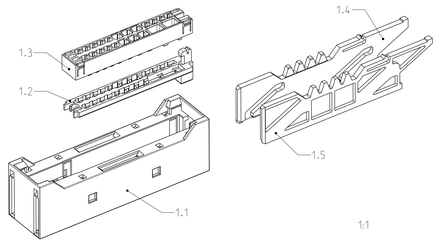

A-A

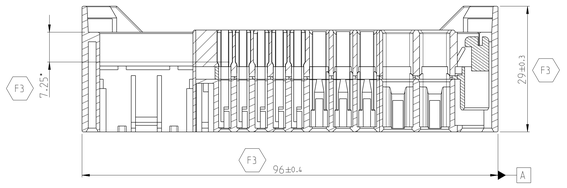

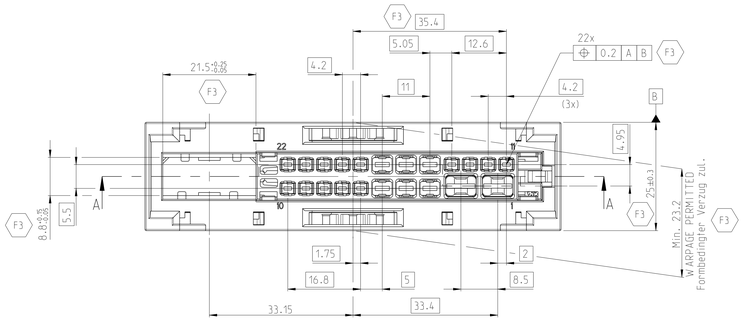

32 POS.
32 Pol. (F3)

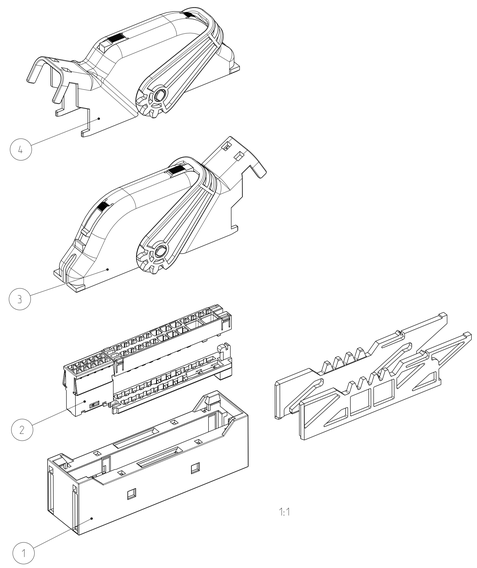

REPRESENTATION WITHOUT POS. 3.4
Darstellung ohne Pos. 3.4 (F3)

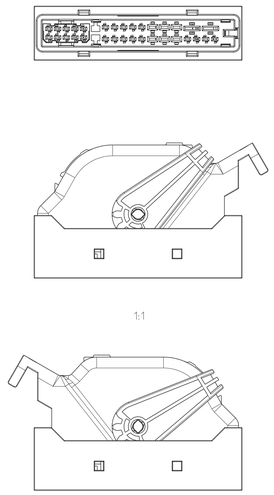

32 POS.
32 Pol. (F3)

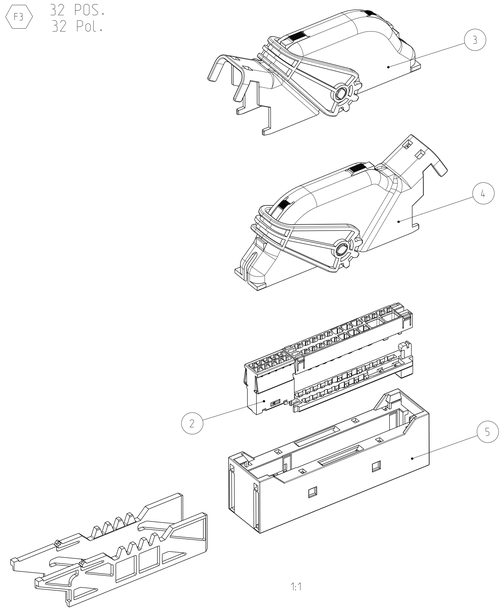

REPRESENTATION WITHOUT POS. 3.4
Darstellung ohne Pos. 3.4 (F3)

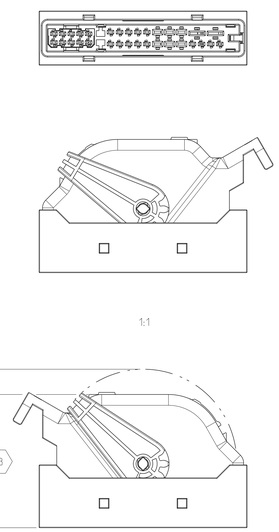

AUDI NO. AUDI NR.	EXECUTION Ausfuehrung	ORDER-NO. TE Bestell-Nr.	ITEM Nr.	POS. Pos.	DISCRIPTION Benennung	Material	COLOUR Farbe	QTY. St.
32 POS. 32 Pol. (F3) 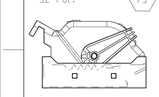	1534053-2 (GENERAL Neutral)	1534184-2	4	3.2	LEVER/Hebel	PBT-GF20	VIOLET/violett	1
				3.1	COVER/Abdeckkappe	PBT-GF20	BLACK/schwarz	1
		1534181-1	2		MCP HSG. / MCP Gehaeuse. 10pol.	PBT-GF10	BLACK/schwarz	1
		1534180-1	1	1.5	SLIDE LEFT / Schieber links	PA66-GF33	BLACK/schwarz	1
				1.4	SLIDE RIGHT / Schieber rechts	PA66-GF33	BLACK/schwarz	1
				1.3	HOLDER-PLATE / Halteplatte	PA66-GF13	BLACK/schwarz	1
				1.2	RETAINER / Halter	PA66-GF30	VIOLET/violett	1
				1.1	CARRIER HSG. / Traeger haeuse	PBT+ASA-GF20	BLACK/schwarz	1
32 POS. 32 Pol. (F3) 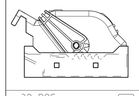	1534053-4 (GENERAL Neutral)	1534184-1	3	3.2	LEVER/Hebel	PBT-GF20	VIOLET/violett	1
				3.1	COVER/Abdeckkappe	PBT-GF20	BLACK/schwarz	1
		1534181-1	2		MCP HSG. / MCP Gehaeuse. 10pol.	PBT-GF10	BLACK/schwarz	1
		1534180-2	5	1.5	SLIDE LEFT / Schieber links	PA66-GF33	BLACK/schwarz	1
				1.4	SLIDE RIGHT / Schieber rechts	PA66-GF33	BLACK/schwarz	1
				1.3	HOLDER-PLATE / Halteplatte	PA66-GF13	BLACK/schwarz	1
				1.2	RETAINER / Halter	PA66-GF30	VIOLET/violett	1
				5.1	CARRIER HSG. / Traeger haeuse	PBT+ASA-GF20	BLACK/schwarz	1
32 POS. 32 Pol. (F3) 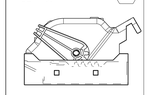	1534053-3 (GENERAL Neutral)	1534184-2	4	3.2	LEVER/Hebel	PBT-GF20	VIOLET/violett	1
				3.1	COVER/Abdeckkappe	PBT-GF20	BLACK/schwarz	1
		1534181-1	2		MCP HSG. / MCP Gehaeuse. 10pol.	PBT-GF10	BLACK/schwarz	1
		1534180-2	5	1.5	SLIDE LEFT / Schieber links	PA66-GF33	BLACK/schwarz	1
				1.4	SLIDE RIGHT / Schieber rechts	PA66-GF33	BLACK/schwarz	1
				1.3	HOLDER-PLATE / Halteplatte	PA66-GF13	BLACK/schwarz	1
				1.2	RETAINER / Halter	PA66-GF30	VIOLET/violett	1
				5.1	CARRIER HSG. / Traeger haeuse	PBT+ASA-GF20	BLACK/schwarz	1
32 POS. 32 Pol. (F3) 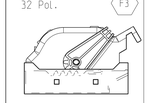	1534053-1 (GENERAL Neutral)	1534184-1	3	3.2	LEVER/Hebel	PBT-GF20	VIOLET/violett	1
				3.1	COVER/Abdeckkappe	PBT-GF20	BLACK/schwarz	1
		1534181-1	2		MCP HSG. / MCP Gehaeuse. 10pol.	PBT-GF10	BLACK/schwarz	1
		1534180-1	1	1.5	SLIDE LEFT / Schieber links	PA66-GF33	BLACK/schwarz	1
				1.4	SLIDE RIGHT / Schieber rechts	PA66-GF33	BLACK/schwarz	1
				1.3	HOLDER-PLATE / Halteplatte	PA66-GF13	BLACK/schwarz	1
				1.2	RETAINER / Halter	PA66-GF30	VIOLET/violett	1
				1.1	CARRIER HSG. / Traeger haeuse	PBT+ASA-GF20	BLACK/schwarz	1

(F3)

1 SUITABLE TAB HEADER 1534046
Passende Stiftleiste 1534046

2 SUITABLE CONTACTS / Passende Kontakte
MCP 1.5: 1241372. 1241374. 1534334
MCP 2.8: 1241386. 1241388. 1241390
MCP 4.8: 1241400. 1241402. 1241404. 1241406

3 FORM CONDITIONED DELAY OF $^{+0.3}_{-0.6}$ ADMISSABLE
Formbedingter Verzug zul. $^{+0.3}_{-0.6}$

4 PARTS MUST BE ORDERED SEPERATLY
Teile müssen einzeln bestellt werden

(F3)

PRODUCT CHARACTERISTICS ACC. QMP EMEA_12
BESONDERE MERKMALE NACH QMP EMEA_12

TOLERANCES UNLESS OTHERWISE SPECIFIED ACC. TO DIN 16901/16925 ENTRIC TO NOMINAL DIMENSION. EDITION 1982-11 SHALL APPLY.
TOLERANZEN/GRENZMASSE NACH DIN 16901/16925. Es gilt die Ausgabe 1982-11.

THIS DRAWING IS A CONTROLLED DOCUMENT.
DIMENSIONING AND TOLERANCING PER GPS ISO STANDARDS

DIMENSIONS: mm
TOLERANCES UNLESS OTHERWISE SPECIFIED: D PLC ±; T PLC ±; A PLC ±; ANGLES ±2°
MATERIAL -
FINISH -

DWN 23JUL2001 R. Dierkes
CHK 21NOV2001 R. Kirsch
APVD -
PRODUCT SPEC 108-18950
APPLICATION SPEC 114-18619-001
WEIGHT -

TE Connectivity

NAME CONNECTOR. 32POSN.. MCP
Steckverbinder. 32pol.. MCP

SIZE A0 | CAGE CODE - | DRAWING NO C-1534053 | RESTRICTED TO -
Customer Drawing | SCALE 2:1 | SHEET 1 OF 1 | REV F3

4806 (3/13)
Downloaded from Arrow.com.