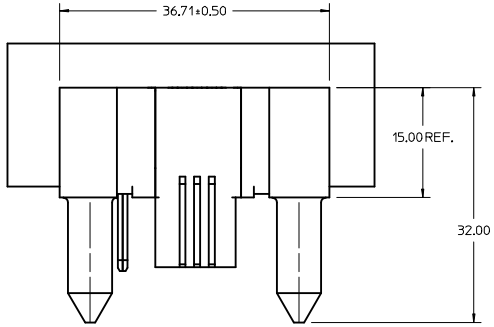

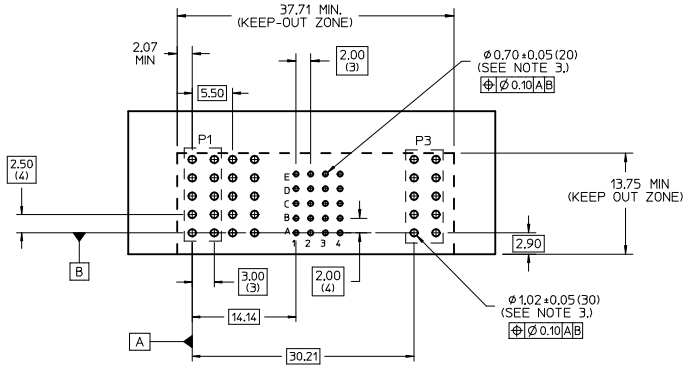

RECOMMENDED PCB LAYOUT AND KEEP-OUT ZONE

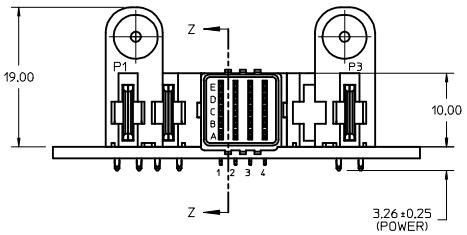

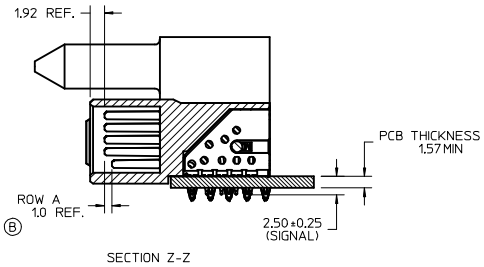

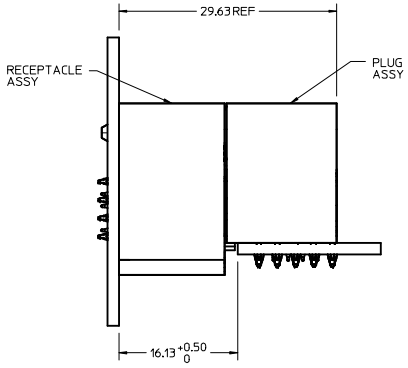

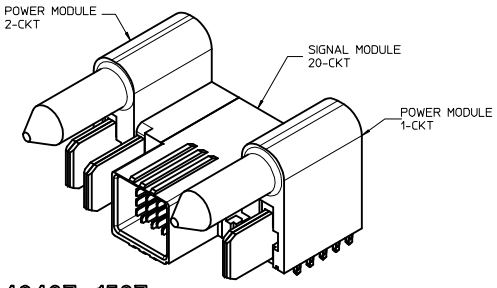

P/N: 46437-1527

NOTES:

1. MATERIAL:
   - -HOUSINGS: LCP UL94 V-0, COLOR: BLACK.
   - -TERMINALS: COPPER ALLOY.
   - -PLATING: 0.000127 NICKEL OVERALL WITH 0.00254 SELECTIVE MATTE TIN ON COMPLIANT PINS. AND 0.000762 SELECTIVE GOLD ON CONTACT AREA.
2. PACKAGING ASSEMBLIES TO BE TRAY PACKED. STD. QUANTITY: TBD.
3. PC BOARD REQUIRES SOLDER THRU HOLES. REFER TO PS-46436-100 FOR DETAILS.
4. PRODUCT SPEC.: PS-46436-100.
5. APPLICATION SPEC: AS-46436-100.
6. SEE PRODUCT SPEC. FOR RoHS REQUIREMENTS.
7. ASSEMBLY MATES WITH MOLEX RECEPTACLE ASSEMBLY, P/N 46562-1527.

RELEASED EC NO: UCP2013-3726 DRWN:KLEE01 2013/03/04 CHK:DKLEE 2013/03/04 APPR:APATEL 2013/04/01	DESCRIPTION	QUALITY SYMBOLS	GENERAL TOLERANCES (UNLESS SPECIFIED) mm / INCH 4 PLACES ±--- / ±--- 3 PLACES ±--- / ±--- 2 PLACES ±0.25 / ±--- 1 PLACE ±0.25 / ±--- ANGULAR ±1/2° DRAFT WHERE APPLICABLE MUST REMAIN WITHIN DIMENSIONS	DIMENSION STYLE: MM ONLY DRAWN BY: KLEE DATE: 2013/03/04 CHECKED BY: KLEE DATE: 2013/03/04 APPROVED BY DATE MATERIAL NO. 46437-1527	SCALE 3:1	DESIGN UNITS METRIC	THIRD ANGLE PROJECTION	TITLE: RECEPTACLE ASSY 2P-20S-1P, PRESS-FIT TEN60 FAMILY molex MOLEX INCORPORATED DOCUMENT NO. SD-46437-1527 SHEET NO. 1 OF 1
B	REV				SIZE D	THIS DRAWING CONTAINS INFORMATION THAT IS PROPRIETARY TO MOLEX INCORPORATED AND SHOULD NOT BE USED WITHOUT WRITTEN PERMISSION		