| MATERIAL NUMBER | ENGINEERING PART NUMBER | COUPLING NUT MATERIAL | COUPLING NUT FINISH |
|---|---|---|---|
| 1300170020 | 1A4006-34 | BRASS | NICKEL PLATED |
| 1300170021 | 1A4006-348 | STAINLESS STEEL | PASSIVATED |

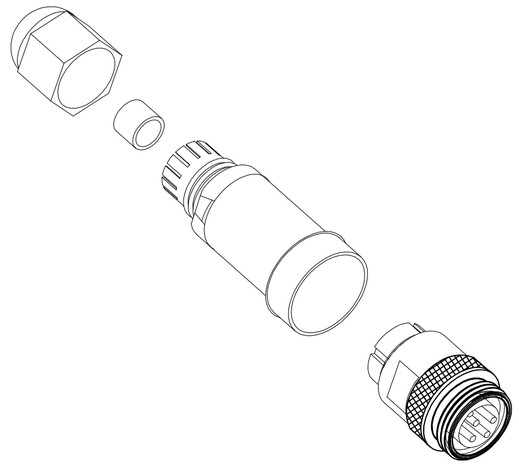

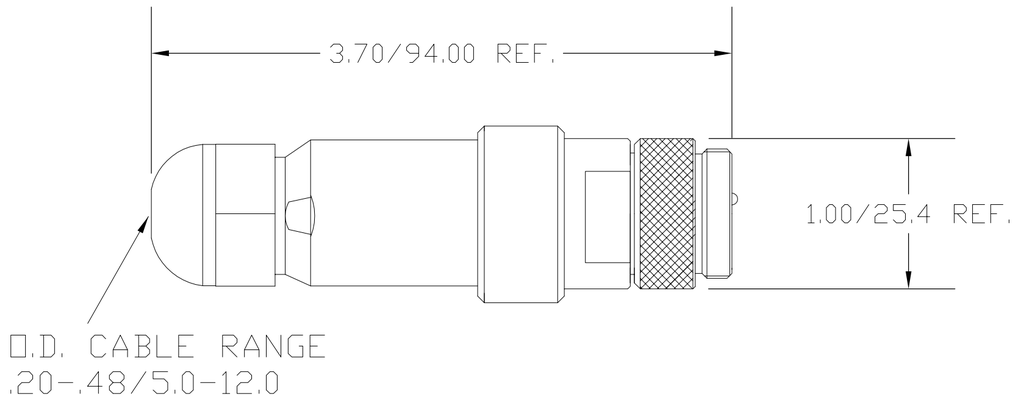


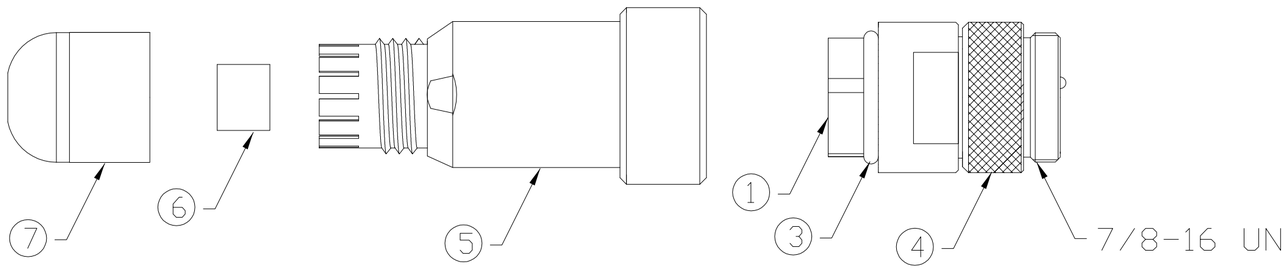


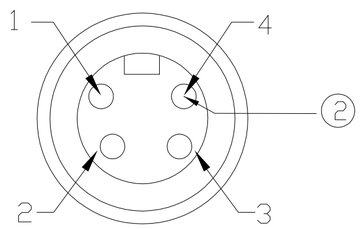


MALE FACE VIEW

| | |
|---|---|
| 1 | |
| 2 | |
| 3 | |
| 4 | |

WIRING CHART

| | |
|---|---|
| VOLTAGE RATING | 600VAC/VDC |
| AMPERAGE RATING | 10 AMPS |
| PROTECTION | IP67 |
| OPERATING TEMPERATURE | -20°C TO 80°C |
| CSA CERTIFICATIONS | CSA CERTIFIED, FILE NO. LR6837 |

| ITEM | COMPONENT | MATERIAL | FINISH |
|---|---|---|---|
| 1 | INSERT | NYLON | BLACK |
| 2 | PIN CONTACTS | COPPER ALLOY | GOLD PLATED |
| 3 | O-RING | NITRILE | BLACK |
| 4 | COUPLING NUT | SEE CHART | SEE CHART |
| 5 | MOLDED BODY | NYLON | BLACK |
| 6 | GROMMET | NITRILE | BLACK |
| 7 | CORD GRIP BODY | NYLON | BLACK |

RELEASE
EC NO: WNA2010-0081 8/25/09
DRWN: TWOLDEGE ---
CH'KD: BWOODMAN
APPR: JFMURPHY 2009/08/27
DESCRIPTION
A
REV

QUALITY SYMBOL
▼=0
(C)=0

GENERAL TOLERANCES (UNLESS SPECIFIED)

| | mm | INCH |
|---|---|---|
| 4 PLACES | ±---- | ±--- |
| 3 PLACES | ±.005 | ±.005 |
| 2 PLACES | ±.013 | ±.010 |
| 1 PLACE | ±.025 | ±.020 |
| ANGULAR ±1/2° | | |

DRAFT WHERE APPLICABLE MUST REMAIN WITHIN DIMENSIONS

DIMENSION STYLE: ----
SCALE: ----
DESIGN UNITS: INCH
THIRD ANGLE PROJECTION

DRAWN BY: TWOLDEGE DATE: 2009/08/25
CHECKED BY: BWOODMAN DATE: 2009/08/25
APPROVED BY: JFMURPHY DATE: 2009/08/26

TITLE: MINI CHANGE ATTACHABLE 4-POLE MALE ST .20"-.48" CABLE RANGE

molex MOLEX INCORPORATED

MATERIAL NO.: SEE CHART
DOCUMENT NO.: SD-130017-008
SHEET NO.: 1 0F 1
SIZE: C

THIS DRAWING CONTAINS INFORMATION THAT IS PROPRIETARY TO MOLEX INCORPORATED AND SHOULD NOT BE USED WITHOUT WRITTEN PERMISSION