AlphaRex³ programmable time switches

digital for rail

Dimensions (mm)

Cat. Nos. 4126 31/41

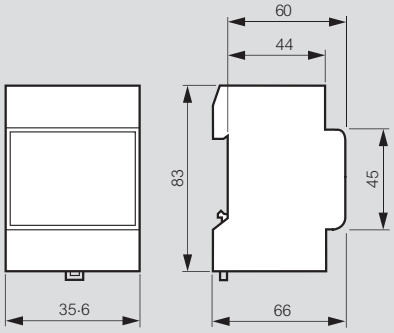

Wiring diagrams

Cat. No. 4126 31

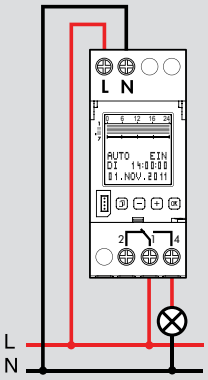

Cat. No. 4126 41

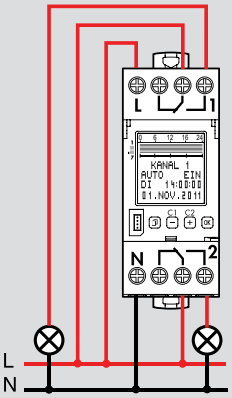

Technical information

Type Cat. No.	AlphaRex³ D21 4126 31	AlphaRex³ D22 4126 41
Supply voltage	230 V∿	
Frequency	50/60 Hz	
Programme	24 hour or 7 day	
No. of channels	1	2
Effective power consumption	Approx 1 W	ca 1·5 W
Switching capacity : cos φ = 1	16 A 250 V∿	
Contact	1 changeover switch	2 changeover switches
Parallel compensation	600 W nax, 70µF	
Switching step	1 second	
Min. switching time	1 second	
Accuracy	±0·1 seconds per day	
Terminal capacity	Single strand 1·5 to 4mm²	
Programmes	56	28 per channel
Working reserve[1]	5 years	
Programme memory	EEPROM	
Summer/Winter time	Auto	
IP rating	IP 20	
No. of 17·5 mm modules	2	
Operating temp.	–20 °C to +55 °C	
Storage temp.	–20 °C to +60 °C	

1 : For time and date only

General information

AlphaRex³ D21 Cat. No. 4126 31

- **Start-up :** after applying the supply voltage, the time switch starts automatically with the last selected function. The relay position is set by the current programme
- **Battery backup**
  - **Backlighting** not active
  - **Data key** READ/WRITE only via the menu

Select menu, back to main menu,
Hold down > 1s = operating display

OK Confirm selection or load parameters

\- + Select menu options or set parameters

AlphaRex³ D22 Cat. No. 4126 41

- **Start-up :** after applying the supply voltage, the time switch starts automatically with the last selected function. The relay position is set by the current programme
- **Battery backup**
  - **Backlighting** not active
  - **Data key** READ/WRITE only via the menu
- **For safety :** when the time switch is connected to the mains supply the contact should not be used on an isolated low voltage supply and when the time switch is connected to the isolated voltage supply the contact should not be used on the mains supply

Select menu, back to main menu,
Hold down > 1s = operating display

OK Confirm selection or load parameters

C1 C2
\- + • Select menu options or set parameters
• Channel selection