REVISIONS					
REV.	ECN NO.	LOCATION	DESCRIPTION	DATE	DESIGN
A0	N/A		INITIAL RELEASE	/	/
A1	N/A		图面升级整理图面	2024.12.1	阿树

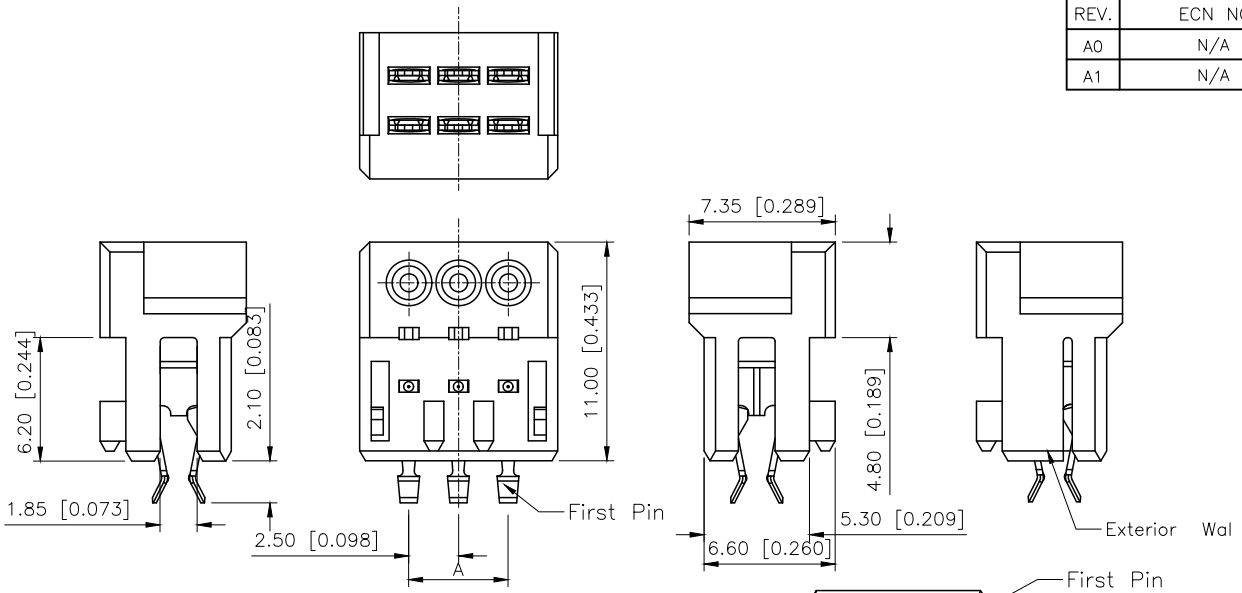

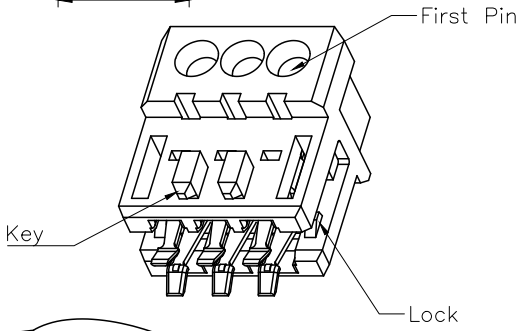

Specifications:
规格:
Voltage rating: 3A 250V AC/DC
额定电压: 3A 250V AC/DC
Temperature range:-40℃~+125℃
温度范围: -40℃~+105℃
Insulator: PA66 UL 94V-0 Nature
绝缘材料: PA66 UL 94V-0 Nature
Terminal: Phosphor Bronze
端子: Phosphor Bronze

PART NO.:

X2514 H I-XX L-X-XX
① ② ③ ④ ⑤ ⑥ ⑦

①Series No.
②Category: H-HSG
③Welding Board Angle: I-HSG+hardware
④Row No.-Pin No.: XX-Single row
⑤L : With Lock
⑥0=Tin plated 120~200u" over Ni 30u" overall,for AWG#22~#24
1=Tin plated 120~200u" over Ni 30u" overall,for AWG#26.
G=Gold Flash over Ni 80~150u" overall.
⑦See the Table of next page

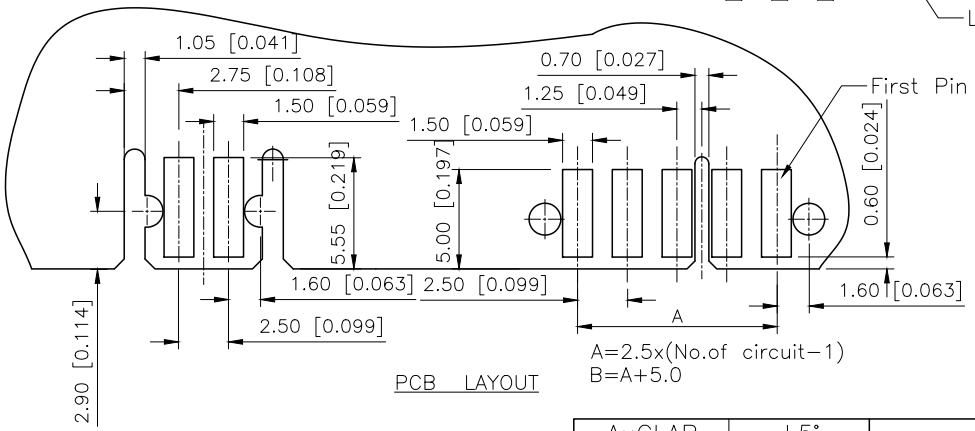

A=2.5x(No.of circuit-1)
B=A+5.0

PCB LAYOUT

PART NO	Material	Wire Range	Material (Terminal)	Suitable XKB Terminal
X2514HI-XXL-X-XX	PA66 94V-0	AWG #22-#24 AWG #26	Phosphor Bronze	X2514W

AuGLAR	±5°
X.	±0.40
X.x	±0.30
X.xx	±0.20
X.xxx	±0.15
UNSPECIFIED TOLERAuCES	

XKB Connection

DESIGN	阿树	VIEW:	MODEL TYPE: 4.0mm BTB Connector
CHECKED		UNIT: mm/in	PART NO.: X4002WF-XX-LPSW
APPROVED		SIZE: A4	DWG NO.:

XKB INDUSTRIAL PRECISION CO.,LIMITED

SCALE	PAGE	REVISION
N/A	1/1	A1