REVISIONS					
REV.	ECN NO.	LOCATION	DESCRIPTION	DATE	DESIGN
A0	N/A		INITIAL RELEASE	/	/
A1	N/A		图面升级整理图面	2025.03.10	阿树

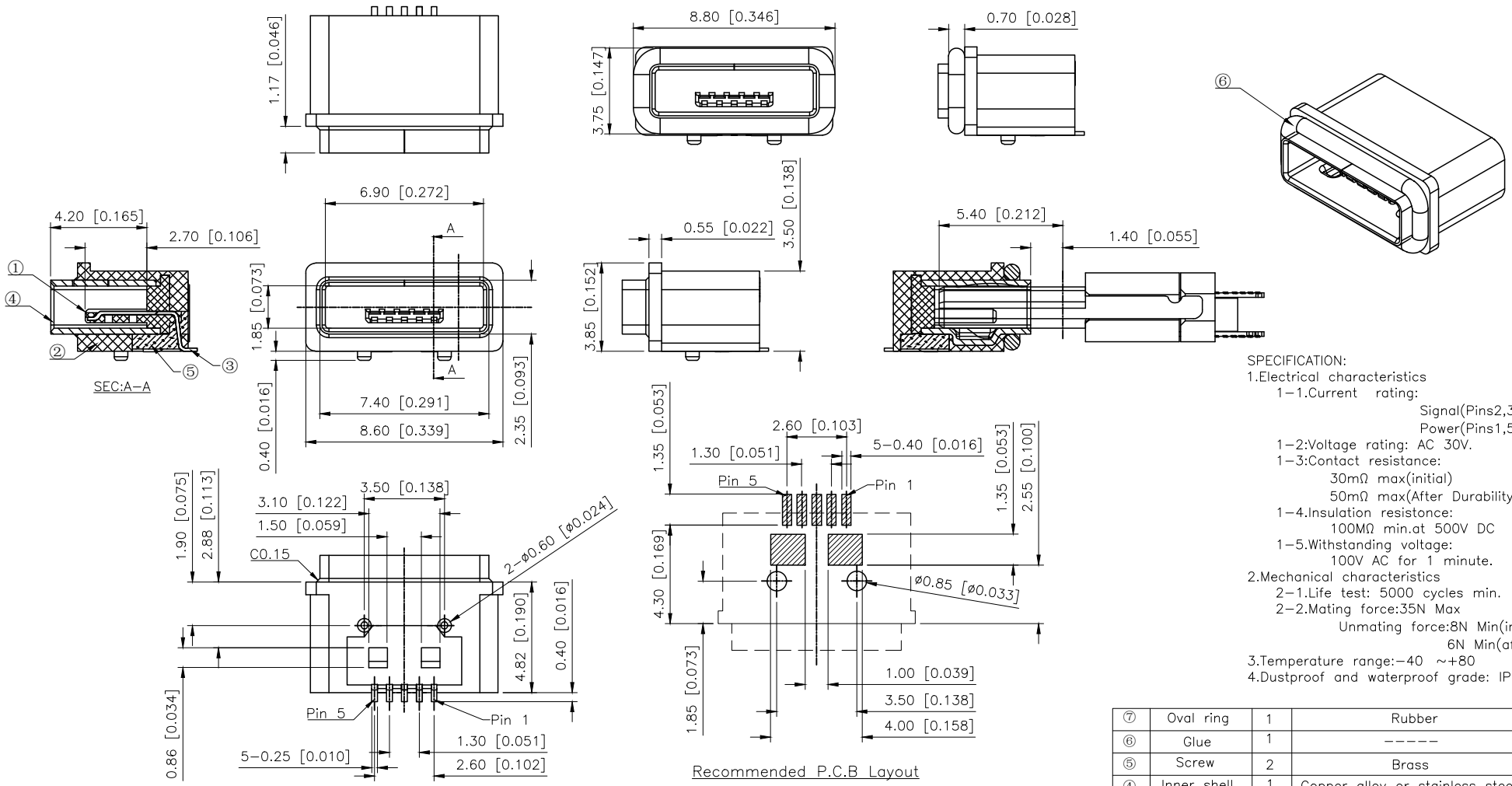

SPECIFICATION:

1.Electrical characteristics

1–1.Current rating:

Signal(Pins2,3,4):DC: 1A

Power(Pins1,5) :DC 1.8A

1–2:Voltage rating: AC 30V.

1–3:Contact resistance:

30mΩ max(initial)

50mΩ max(After Durability)

1–4.Insulation resistonce:

100MΩ min.at 500V DC

1–5.Withstanding voltage:

100V AC for 1 minute.

2.Mechanical characteristics

2–1.Life test: 5000 cycles min.

2–2.Mating force:35N Max

Unmating force:8N Min(initial).

6N Min(after life test)

3.Temperature range:–40 ~+80

4.Dustproof and waterproof grade: IP67

ITEM	PAPT NAME	QTY	MATERIAL	FINISHING
⑦	Oval ring	1	Rubber	Black
⑥	Glue	1	-----	Black
⑤	Screw	2	Brass	Nickel plated
④	Inner shell	1	Copper alloy or stainless steel	Nickel plated
③	Terminal	5	Copper alloy,0.15t	Gold Plated On Contact Area.
②	Outer shell	1	High temperature thermoplastic	Black
①	Body	1	High temperature thermoplastic	Black

Contact Number	Signal Name	Remarks
1#	VBUS	Power
2#	D–	Date–
3#	D+	Date+
4#	ID	Reserve or Gound
5#	GND	Gound

AuGLAR	±5°
X.	±0.40
X.x	±0.30
X.xx	±0.20
X.xxx	±0.15
UNSPECIFIED TOLERAuCES	

XKB Connection

DESIGN	阿树	VIEW:	MODEL TYPE: MICRO USB
CHECKED		UNIT: mm/in	PART NO.: U–E–M5SS–W–1
APPROVED		SIZE: A4	DWG NO.:

XKB INDUSTRIAL PRECISION CO.,LIMITED

SCALE	PAGE	REVISION
N/A	1/1	A1

www.helloxkb.com www.helloxkb.cn www.xk–dg.cn