3P M12 FEMALE

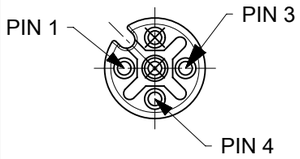

PIN	WIRE COLOR
1	BN
2	-
3	BU
4	BK
5	-

4P M12 FEMALE

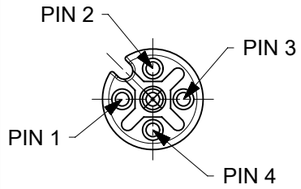

PIN	WIRE COLOR
1	BN
2	WH
3	BU
4	BK
5	-

5P M12 FEMALE

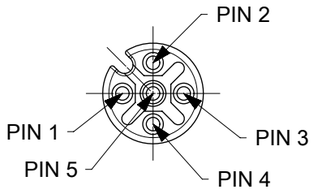

PIN	WIRE COLOR
1	BN
2	WH
3	BU
4	BK
5	GY

CODING ACCORDING TO IEC 61076-2-101

3P M12 MALE

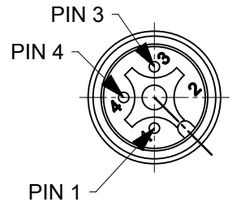

PIN	WIRE COLOR
1	BN
2	-
3	BU
4	BK
5	-

4P M12 MALE

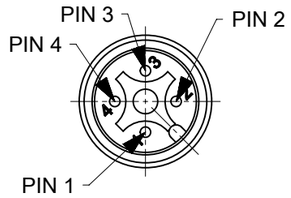

PIN	WIRE COLOR
1	BN
2	WH
3	BU
4	BK
5	-

5P M12 MALE

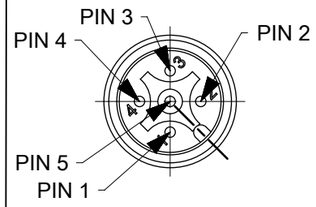

PIN	WIRE COLOR
1	BN
2	WH
3	BU
4	BK
5	GY

CODING ACCORDING TO IEC 61076-2-101

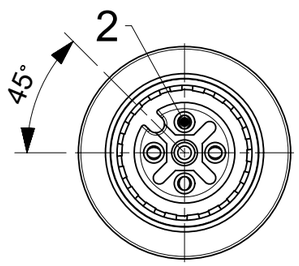

5 POLE SHOWN

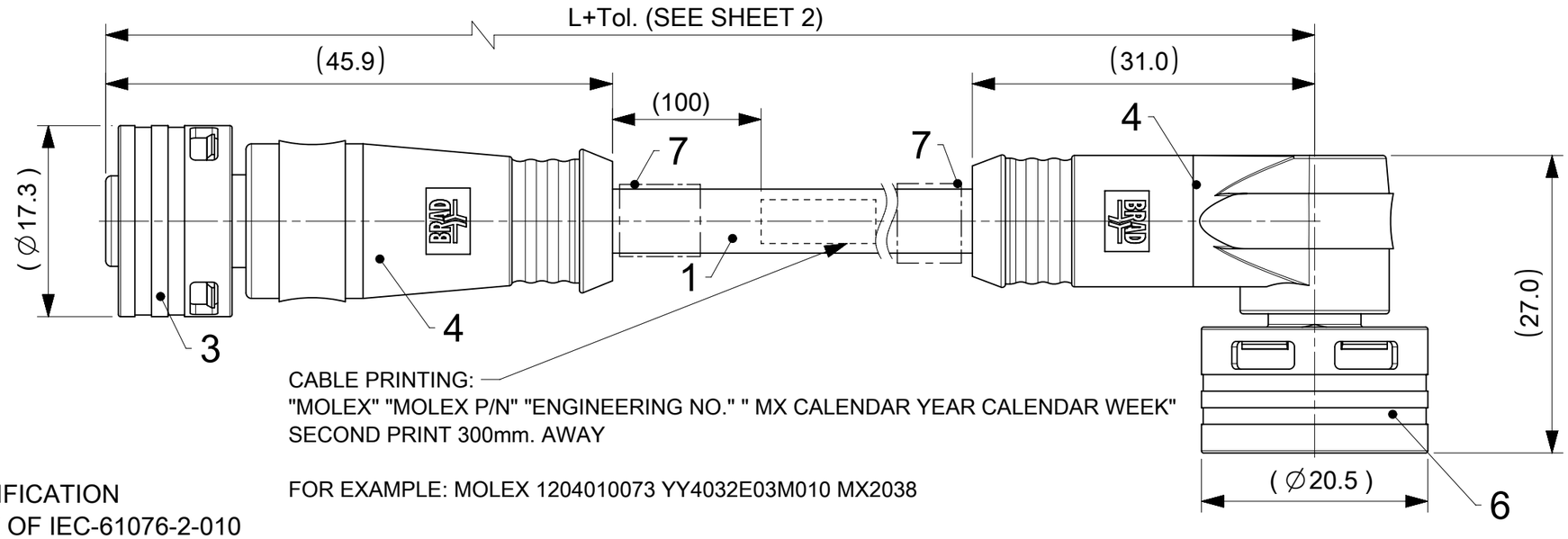

CABLE PRINTING:
"MOLEX" "MOLEX P/N" "ENGINEERING NO." " MX CALENDAR YEAR CALENDAR WEEK"
SECOND PRINT 300mm. AWAY

FOR EXAMPLE: MOLEX 1204010073 YY4032E03M010 MX2038

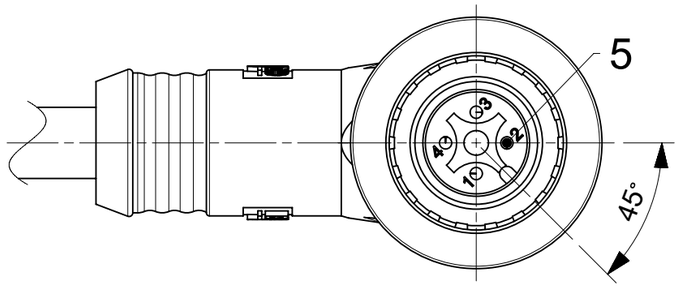

NOTES:

1. PARTS ACC. TO PRODUCT SPECIFICATION
   1204000001 PS P10 AND IN STYLE OF IEC-61076-2-010
2. BOM & PART LIST - SEE SHEET 2
3. RATED VOLTAGE:
   3, 4 CONTACTS: 250V AC OR DC
   5 CONTACTS: 60V AC OR DC
   RATED CURRENT:
   3, 4, 5 CONTACTS: 4A, DERATING HAS TO BE CONSIDERED
   OVERVOLTAGE CATEGORY: 3
   POLLUTION DEGREE: 3, ONLY IN MATED AND LOCKED CONDITION
4. PROTECTION CLASS: IP 67, ONLY IN MATED AND LOCKED CONDITION
5. TEMPERATURE RANGE:
   TEMPERATURE PLUG/SOCKET: -40 °C TO +85 °C
   TEMPERATURE CABLE: SEE CABLE LIST
6. MECHANICAL OPERATIONS: 100 CYCLES
7. MATES WITH ULTRA-LOCK M12 RECEPTACLES
8. PACKAGING: THE CORDSETS ARE SINGLE PACKED IN PLASTIC BAGS
   AND DELIVERED IN CARTON BOXES
9. UL CSA FILE REGISTRATION PENDING

THIS DRAWING CONTAINS INFORMATION THAT IS PROPRIETARY TO MOLEX ELECTRONIC TECHNOLOGIES, LLC AND SHOULD NOT BE USED WITHOUT WRITTEN PERMISSION

FUNCTIONAL SYMBOLS	FA = 0, FC = 0, FP = 0
DIVISIONAL SYMBOLS	
DIMENSION UNITS	mm
SCALE	2:1
GENERAL TOLERANCES (UNLESS SPECIFIED)	
ANGULAR TOL	± 1.0 °
4 PLACES	±
3 PLACES	±
2 PLACES	± 0.05
1 PLACE	± 0.3
0 PLACES	± 0.5
DRAFT WHERE APPLICABLE MUST REMAIN WITHIN DIMENSIONS	

CURRENT REV DESC: NOTES AND CABLE LIST UPDATED

EC NO: 736602
DRWN: RSCHIEBER 2023/01/26
CHK'D: RSILLER 2023/01/31
APPR: RSILLER 2023/01/31

INITIAL REVISION:
DRWN: MDHARMANTI 2021/03/18
APPR: RSILLER 2022/10/14

THIRD ANGLE PROJECTION | DRAWING: A3-SIZE | SERIES: 120401

molex

CSE U12 4-5P AC FE STR MA RA XM DE UNSH BK

PRODUCT CUSTOMER DRAWING

DOCUMENT NUMBER	DOC TYPE	DOC PART	REVISION
1204010073	PSD	000	A1

MATERIAL NUMBER	CUSTOMER	SHEET NUMBER
SEE SHEET 2	GENERAL MARKET	1 OF 2

DOCUMENT STATUS	P1	RELEASE DATE	2023/01/31 08:21:25

FORMAT: master_tmpl_v3A3
REVISION: J
DATE: 2020/01/16

PART No MATRIX

Y	Y	X	0	3	2	X	X	X	X	X	X	X	X	X
													OPTIONS	

YY= ULTRA LOCK 2.0
DOUBLE ENDED

POLES:
3 = 3 POLES
4 = 4 POLES
5 = 5 POLES

HEADER :
032= FEMALE STRAIGHT
-MALE RIGHT ANGLE

CABLE:
E03 - 3/4/5x0.34 PVC BLACK
B30 - 3/4/5x0.34 WSOR BLACK
H09 - 3/4/5x0.34 PUR-LS0H BLACK

UNIT:
M = METER
F = FEET
C = CENTIMETER
T = 10M

LENGTH:
EXAMPLE:
010 = 1 m
050 = 5 m
100 = 10 m

OVERMOLD:
BLANK = STANDARD BRAD:
-YELLOW IN THE USA
-BLACK IN EUROPE
A = GREY
E = RED
G = BLACK
Y = YELLOW
H = STD. COLOUR WITH TWO
ID-TAG CARRIERS

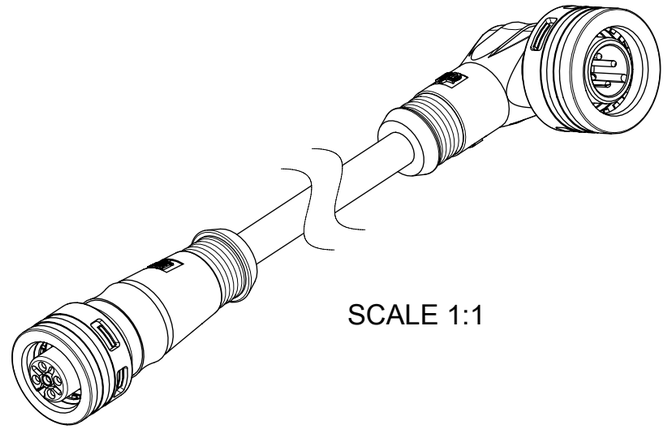

SCALE 1:1

CABLE LIST

3P	4P	5P	CABLE TYPE	DESCRIPTION	MATERIAL	FINISH/COLOR	FIXED INSTALLATION *		FLEXIBLE INSTALLATION **		DRAG CHAIN	
							MIN.	MAX.	MIN.	MAX.	MIN.	MAX.
X			E03	CABLE PVC, BLK 3X0.34MM D4.9	PVC	BLACK	-30°C	+80°C	-10°C	+80°C	NOT SUITABLE	
	X			CABLE PVC, BLK 4X0.34MM D5.4								
		X		CABLE PVC, BLK 5X0.34MM(UL/CSA) D5.8								
X			B30	CABLE 3X0.34 TPU BK D4.80 TPE UNSH DCS	PUR WSOR	BLACK	-40°C	+90°C	-25°C	+80°C	-5°C	+60°C
	X			CABLE 4X0.34 TPU BK D5.10 TPE UNSH DCS								
		X		CABLE 5X0.34 TPU BK D5.50 TPE UNSH DCS								
X			H09	CABLE PUR;BLK 3X0.34MM-LSOH;UL D4.4	PUR-LS0H	BLACK	-40°C	+80°C	-25°C	+80°C	+5°C	+60°C
	X			CABLE PUR;BLK 4X0.34MM-LSOH;UL D4.7								
		X		CABLE PUR BLK 5X0.34MM LSZH UL D5.0								

* FIXED POSITION WITHOUT ACCIDENTAL CRUSHING OF VIBRATION.
** FREE MOTION WITHOUT PERIODIC RECURRENCE OR FORCED GUIDANCE.

PART LIST

MOLEX NO.	ENGINEERING NO.	LENGHT (MM)
1204010073	YY4032E03M010	1000
1204010074	YY4032E03M020	2000
1204010075	YY4032E03M050	5000
1204010076	YY4032E03M100	10000
1204010077	YY4032B30M010	1000
1204010078	YY4032B30M020	2000
1204010079	YY4032B30M050	5000
1204010080	YY4032B30M100	10000
1204010081	YY4032H09M010	1000
1204010082	YY4032H09M020	2000
1204010083	YY4032H09M050	5000
1204010084	YY4032H09M100	10000
1204010085	YY5032E03M010	1000
1204010086	YY5032E03M020	2000
1204010087	YY5032E03M050	5000
1204010088	YY5032E03M100	10000
1204010089	YY5032B30M010	1000
1204010090	YY5032B30M020	2000
1204010091	YY5032B30M050	5000
1204010092	YY5032B30M100	10000
1204010093	YY5032H09M010	1000
1204010094	YY5032H09M020	2000
1204010095	YY5032H09M050	5000
1204010096	YY5032H09M100	10000

CABLE LENGTH TOLERANCES

LENGTH	TOLERANCE
0m-1m	+40 mm
>1m-5m	+60 mm
>5m-10m	+80 mm
>10m-20m	+140 mm
>20m-30m	+160 mm
>30m	+1% length

BILL OF MATERIAL

3P	4P	5P	ITEM	QTY	DESCRIPTION	MATERIAL	FINISH/COLOR
X	X	X	1	-	CABLE	SEE CABLE LIST	SEE CABLE LIST
X	X	X	2	3/4/5	CONTACT 10 FE STA AU	BRASS	GOLD OVER NICKEL PLATED
X			3	1	PLG U12 3P AC FE PA UNSH	-	-
	X				PLG U12 4P AC FE PA UNSH		
		X			PLG U12 5P AC FE PA UNSH		
X	X	X	4	2	OVERMOLD	TPC	SEE MATRIX
X	X	X	5	3/4/5	CONTACT 10 MA STA NI AU	COPPER ALLOY	GOLD OVER NICKEL PLATED
X			6	1	PLG U12 3P AC MA PA UNSH WT	-	-
	X				PLG U12 4P AC MA PA UNSH WT		
		X			PLG U12 5P AC MA PA UNSH WT		
IF "H" IS IN MATRIX-END			7	2	I/D CARRIER DIA 4-7MMX30MM	PVC	TRANSPARENT

DOCUMENT STATUS	P1	RELEASE DATE	2023/01/31 08:21:25

THIS DRAWING CONTAINS INFORMATION THAT IS PROPRIETARY TO MOLEX ELECTRONIC TECHNOLOGIES, LLC AND SHOULD NOT BE USED WITHOUT WRITTEN PERMISSION

FUNCTIONAL SYMBOLS
FA = 0
FC = 0
FP = 0

DIVISIONAL SYMBOLS

DIMENSION UNITS	SCALE
mm	2:1

GENERAL TOLERANCES (UNLESS SPECIFIED)

ANGULAR TOL	±	1.0 °
4 PLACES	±	
3 PLACES	±	
2 PLACES	±	0.05
1 PLACE	±	0.3
0 PLACES	±	0.5

DRAFT WHERE APPLICABLE MUST REMAIN WITHIN DIMENSIONS

CURRENT REV DESC: NOTES AND CABLE LIST UPDATED

EC NO: 736602
DRWN: RSCHIEBER 2023/01/26
CHK'D: RSILLER 2023/01/31
APPR: RSILLER 2023/01/31

INITIAL REVISION:
DRWN: MDHARMANTI 2021/03/18
APPR: RSILLER 2022/10/14

THIRD ANGLE PROJECTION | DRAWING: A3-SIZE | SERIES: 120401

molex

CSE U12 4-5P AC FE STR MA RA XM DE UNSH BK

PRODUCT CUSTOMER DRAWING

DOCUMENT NUMBER	DOC TYPE	DOC PART	REVISION
1204010073	PSD	000	A1

MATERIAL NUMBER	CUSTOMER	SHEET NUMBER
SEE PART LIST	GENERAL MARKET	2 OF 2