Jul.1.2024 Copyright 2024 HIROSE ELECTRIC CO., LTD. All Rights Reserved.
In case of consideration for using Automotive equipment / device which demand high reliability, kindly contact our sales window correspondents.

	COUNT	DESCRIPTION OF REVISIONS	BY	CHKD	DATE		COUNT	DESCRIPTION OF REVISIONS	BY	CHKD	DATE
△					. .	△					. .
△					. .	△					. .
△					. .	△					. .

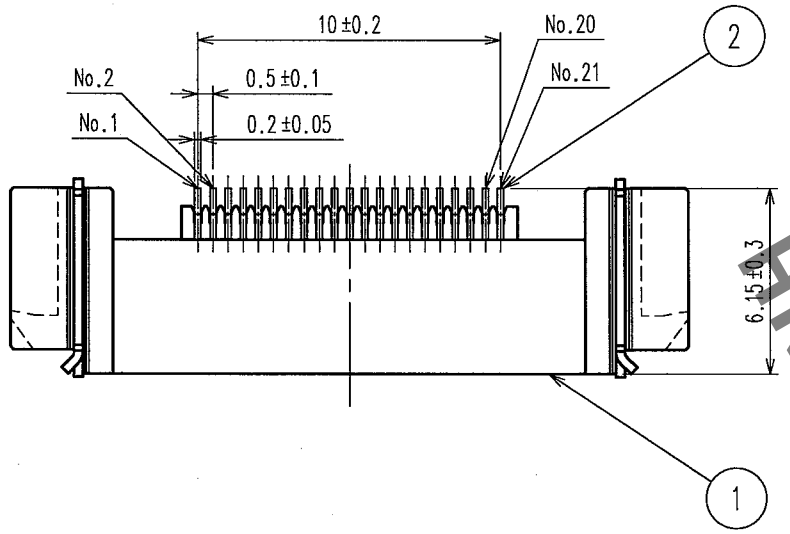

RECOMMEMDED LAND PATTERN

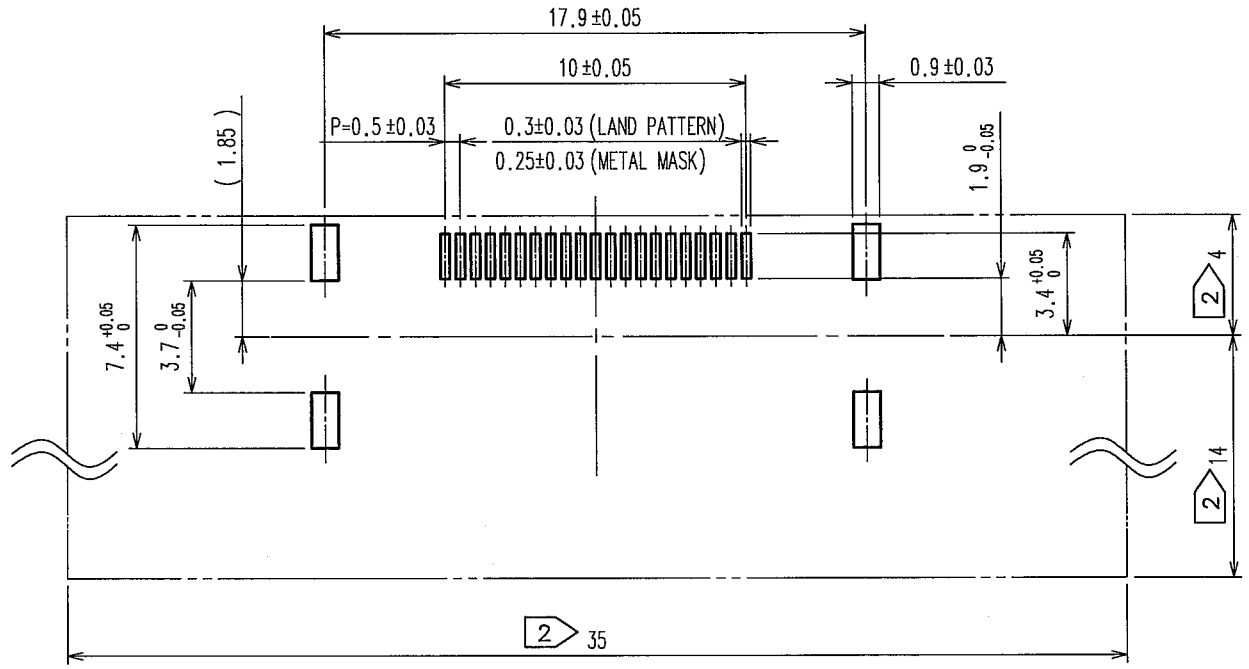

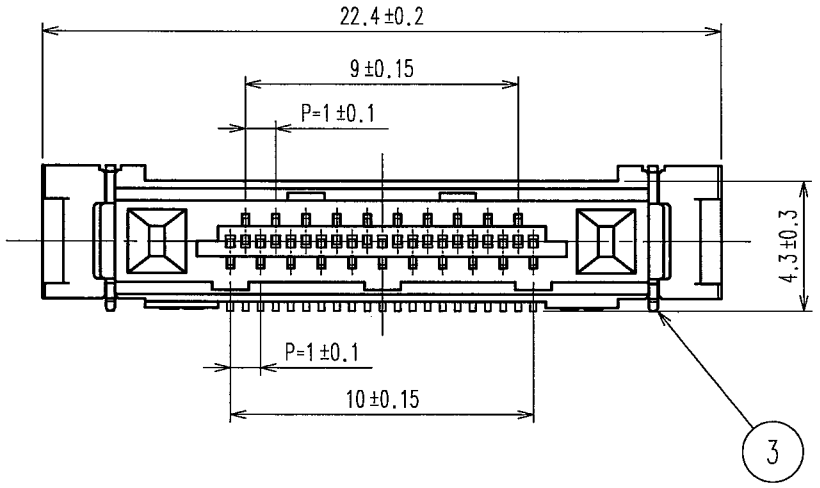

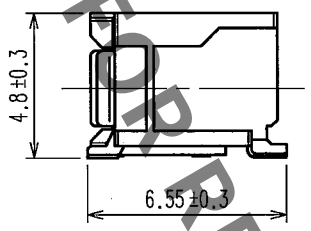

HRS DRAWING FOR REFERENCE

NOTE 1 SMT LEAD-COPLANARITY:0.1MAX.
2 DO NOT MOUNT OTHER DEVICES ONTO [ ] AREA, OR MATINGPAIR CANNOT BE MATED AND OPERATED THE LOCK PARTS.

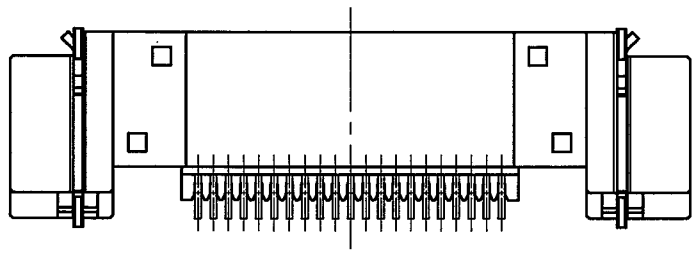

NO.	MATERIAL	FINISH, REMARKS
3	PHOSPHOR BRONZE	PARTIAL PLATING : GOLD FLASH
1	POLYAMIDE	BLACK, UL94 V-0

NO.	MATERIAL	FINISH, REMARKS
2	PHOSPHOR BRONZE	CONTACT AREA:GOLD 0.1μm min. LEAD AREA:TIN-PLATING 1μm min. UNDER PLATING:NICKEL 0.5μm min.

CODE NO.(OLD)	DRAWN	DESIGNED	CHECKED	APPROVED	RELEASED
	T.NODA '06.05.12	T.Mode '06.05.12	H.Yamaguchi '06.05.12	H.Okawa '06.05.15	

SCALE 4 : 1
UNITS mm

DRAWING NO. EDC3-155941

HRS HIROSE ELECTRIC CO., LTD

PART NO. FX15M-21S-0.5SH

CODE NO. CL575-2309-3

1/2

FORM NO.229

TO

Jul.1.2024 Copyright 2024 HIROSE ELECTRIC CO., LTD. All Rights Reserved.
In case of consideration for using Automotive equipment / device which demand high reliability, kindly contact our sales window correspondents.

	COUNT	DESCRIPTION OF REVISIONS	BY	CHKD	DATE		COUNT	DESCRIPTION OF REVISIONS	BY	CHKD	DATE
△					. .	△					. .
△					. .	△					. .
△					. .	△					. .

UNREELING DIRECTION

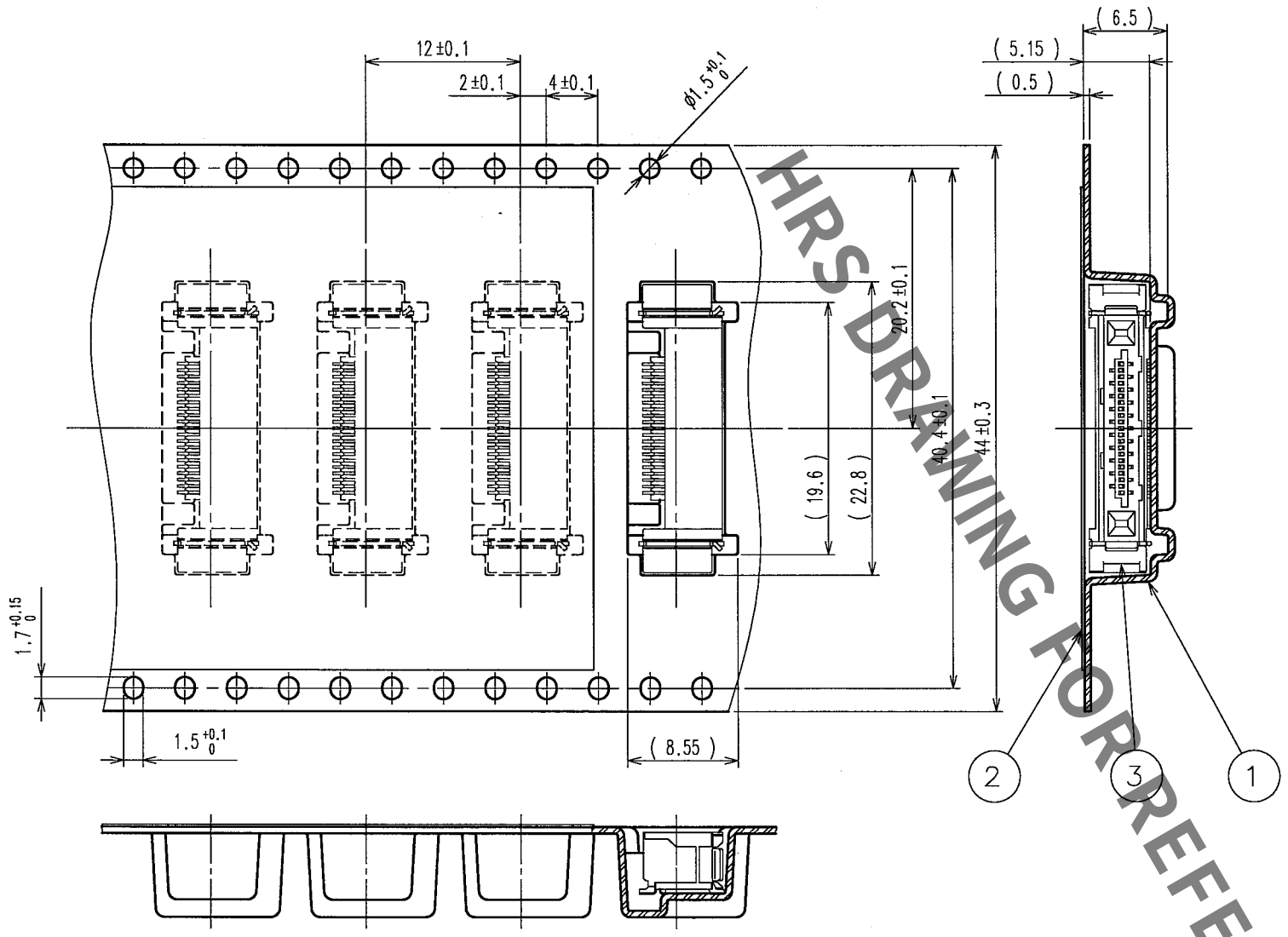

REEL DIMENSION (FREE)

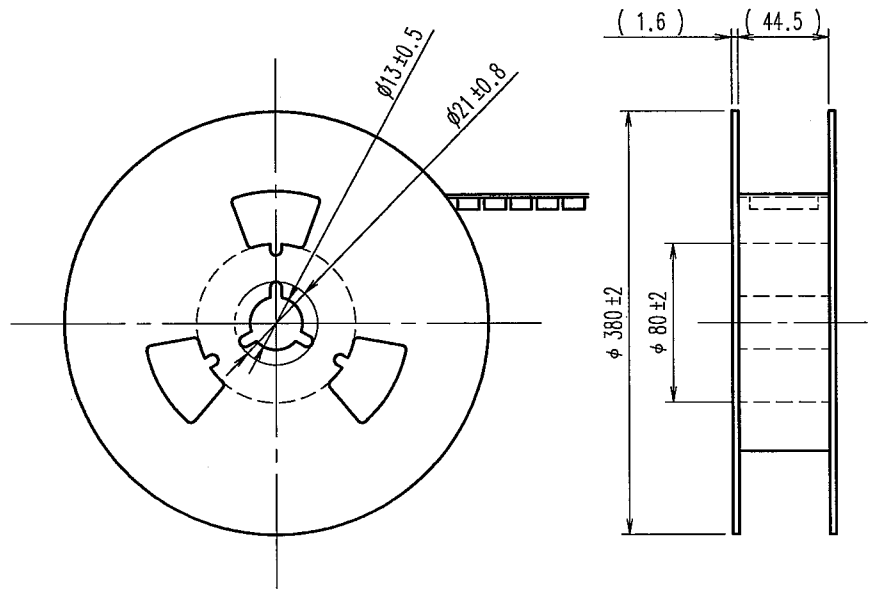

NOTE 1. 1 REEL : 1000 CONNECTORS.

HRS DRAWING FOR REFERENCE

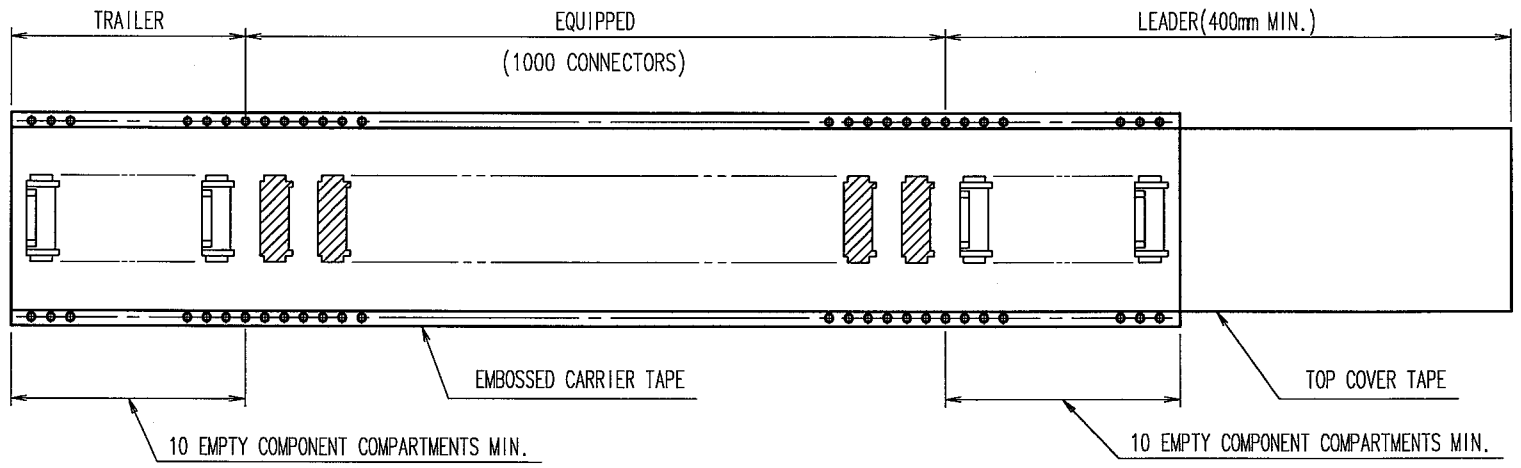

NO.	MATERIAL	FINISH, REMARKS
3		(CONNECTOR)
2	POLYESTER	(TOP COVER TAPE)
1	POLYSTYRENE	(EMBOSSED CARRIER TAPE)

CODE NO.(OLD)	DRAWN	DESIGNED	CHECKED	APPROVED	RELEASED
DRAWING FOR PACKAGING	T.NODA '06.05.12	T.Noda '06.05.12	H.Yamaguchi '06.05.12	H.Okawa '06.05.15	

SCALE 2 : 1	DRAWING NO. EDC3-155941	PART NO. FX15M-21S-0.5SH
UNITS mm	HRS HIROSE ELECTRIC CO., LTD	CODE NO. CL575-2309-3 2/

TO

FORM NO.229