FACE VIEW-MALE INSERT

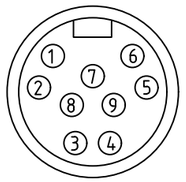

9 POLE	10 POLE	12 POLE
1 ORANGE	1 ORANGE	1 ORANGE
2 BLUE	2 BLUE	2 BLUE
3 RED/BLACK	3 WHITE/BLACK	3 WHITE/BLACK
4 GREEN/BLACK	4 RED/BLACK	4 RED/BLACK
5 WHITE	5 GREEN/BLACK	5 GREEN/BLACK
6 RED	6 ORANGE/BLACK	6 ORANGE/BLACK
7 GREEN/YELLOW	7 RED	7 BLUE/BLACK
8 WHITE/BLACK	8 GREEN/YELLOW	8 BLACK/WHITE
9 BLACK	9 BLACK	9 GREEN/YELLOW
	10 WHITE	10 RED
		11 WHITE
		12 BLACK

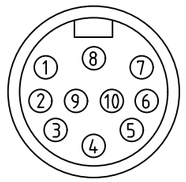

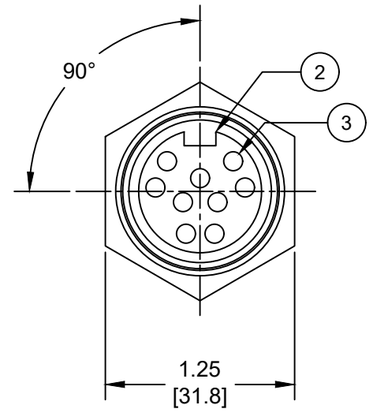

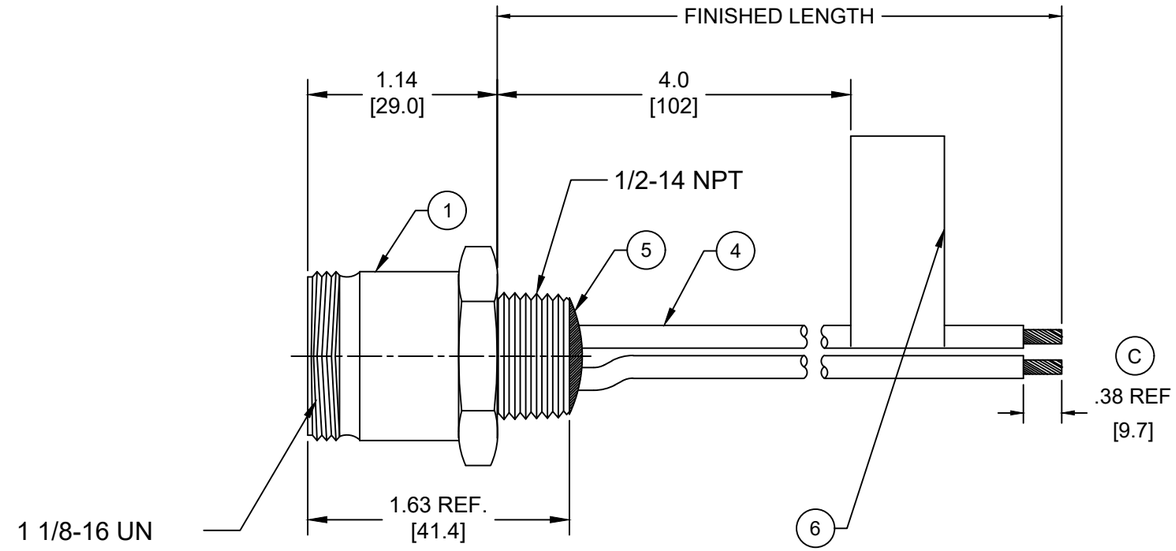

PART NO	ENGINEERING NO.	FINISHED LENGTH
1300150137	3R9006A20A120	12 IN [0.3M]
1300150051	3R1006A20F120	12 FT [3.6M]
1300150091	3R2006A20M050	5.0M [16 FT 5 IN]

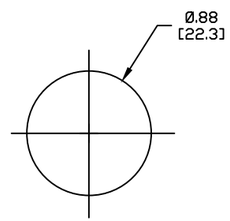

REF. KNOCKOUT HOLE

PART NO. MATRIX

3R1006A20F010

POLES

9= 9 POLES
1=10 POLES
2=12 POLES

LENGTH:

A120= 12 INCHES
F001= .1 FT
F020= 2 FT
F200= 20 FT

M005= 0.5 METER
M010= 1 METER
M100= 10 METER

NOTES:
1. MATERIAL: AS NOTED
2. FINISH: AS NOTED
3. ELECTRICAL:
   VOLTAGE: 320V PER IEC60664
   600V PER UL2238
   CURRENT: 9 POLE: 7A
   10 POLE: 7A
   12 POLE: 5A
4. TEMP RATING: -20°TO +105°C
5. PROTECTION: IP67 (WHEN MATED)
6. UL RECOGNIZED, FILE: E152210
   CSA CERTIFIED, FILE: LR6837
7. ALL DIMENSIONS ARE FOR REFERENCE UNLESS TOLERANCED OR NOTED OTHERWISE

CABLE LENGTH TOLERANCES
>.3M [1FT]: +19mm-0 [+.75in-0]
.3 - .9M [1 - 3FT]: +44.5mm-0 [+1.75in-0]
.9 - 1.8M [3 - 6FT]: +55.6mm-0 [+2.19in-0]
1.8 - 3.7M [6 - 12FT: +88.9mm-0 [+3.50in-0]
3.7 - 7.3M [12 - 24FT]: +165.1mm-0 [+6.50in-0]
7.3-14.6M [24 - 48FT]: +317.5mm-0 [+12.50in-0]
14.6 - 30.5M [48-100FT]: +622.3mm-0 [+24.50in-0]
OVER 30M [100FT] +2% OF FINISHED LENGTH

ITEM	DESCRIPTION	MATERIAL	FINISH
6	FLAG LABEL	VINYL	BLACK/YELLOW
5	POTTING MATERIAL	EPOXY	
4	WIRE, 16 AWG UL (1015)	PVC INSULATION	SEE CHART
3	CONTACT PIN	COPPER ALLOY	GOLD PLATED
2	MALE INSERT (C-SIZE)	TPE	YELLOW
1	RECEPTACLE SHELL	ZINC DIE-CAST	BLACK

DOCUMENT STATUS	P1	RELEASE DATE	2024/06/12 18:47:11

FORMAT: IN-ACAD-tb-prod-B
REVISION: B
DATE: 2020/01/14

FUNCTIONAL SYMBOLS
FA=0
FC=0
FP=0
DIVISIONAL SYMBOLS

THIS DRAWING CONTAINS INFORMATION THAT IS PROPRIETARY TO MOLEX ELECTRONIC TECHNOLOGIES, LLC AND SHOULD NOT BE USED WITHOUT WRITTEN PERMISSION

DIMENSION UNITS	SCALE
INCH/MM	NTS

GENERAL TOLERANCES (UNLESS SPECIFIED)

	mm	INCH
4 PLACES	± ----	± ----
3 PLACES	± ----	± ----
2 PLACES	± ----	± ----
1 PLACE	± ----	± ----
0 PLACES	± ----	± ----
ANGULAR TOL ± ---- °		

DRAFT WHERE APPLICABLE MUST REMAIN WITHIN DIMENSIONS

CURRENT REV DESC: ADD STRIPPING LENGTH

EC NO:	783622	
DRWN:	LESPINOZA	2024/04/18
CHK'D:	HENRYB1	2024/04/18
APPR:	BWOODMAN	2024/06/12

INITIAL REVISION:

DRWN:	RSTONE	2016/12/08
APPR:	BWOODMAN	2017/02/02

THIRD ANGLE PROJECTION

molex

MINI-CHANGE RECEPTACLE, C-SIZE,
9, 10 & 12 POLE, MALE, STRAIGHT, SINGLE KEY, 16 AWG

PRODUCT CUSTOMER DRAWING

DOCUMENT NUMBER	DOC TYPE	DOC PART	REVISION
SD-130015-027	PSD	001	C

DRAWING	SERIES	MATERIAL NUMBER	CUSTOMER	SHEET NUMBER
B-SIZE	130015	SEE_CHART	GENERAL MARKET	1 OF 1