2CKT POLARIZATIONS

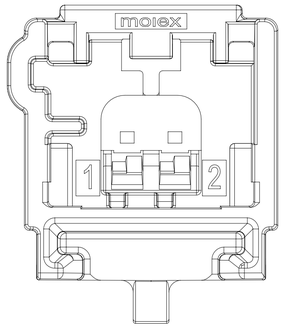

POLARIZATION A

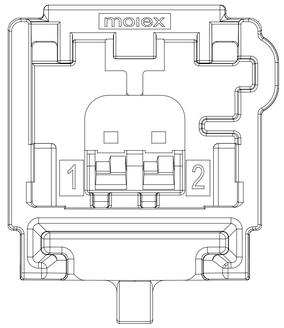

POLARIZATION B

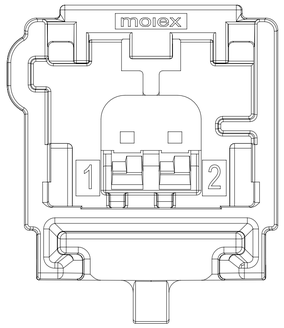

POLARIZATION C

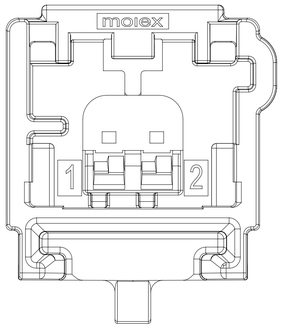

POLARIZATION D

8CKT POLARIZATIONS

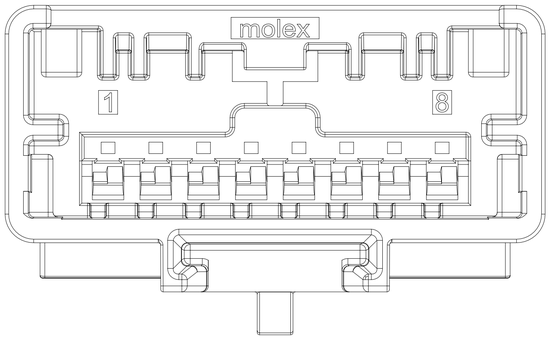

POLARIZATION A

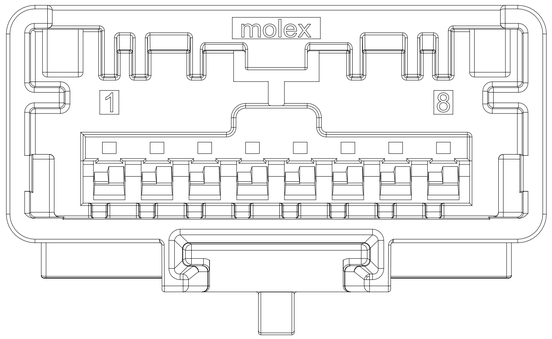

POLARIZATION B

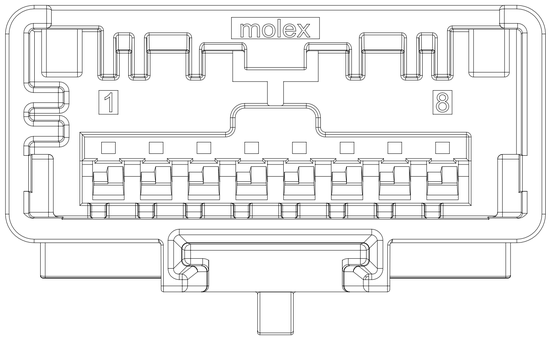

POLARIZATION C

NOTES: VALID UNLESS OTHERWISE SPECIFIED

1. GENERAL:
   - 1.1 APPLICATION SPECIFICATION SEE: 2037000001_AS
   - 1.2 PRODUCT SPECIFICATION SEE: 2037000001_PS
   - 1.3 PACKAGING SPECIFICATION PER MOLEX DRAWING: PK-31301-898
   - 1.4 PARTS MUST BE IN COMPLIANCE TO MOLEX CHEMICAL SUBSTANCES FOR PRODUCTS AND PACKAGING SPECIFICATION: QEHS-699000-300 (FOR SUPPLIERS) OR QEHS-699000-304 (INTERNAL)
   - 1.5 DATA MUST BE SUBMITTED UNDER THE MOLEX PART NUMBER TO IMDS (COMPANY ID#13255)

2. DESIGN - MATERIALS:
   - 2.1 RECEPTACLE HOUSING:
     - a. MATERIAL: SEE PART TABLE
     - b. COLOR: SEE PART TABLE

3. DESIGN - GEOMETRY:
   - 3.1 GEOMETRIC DIMENSIONS AND TOLERANCES PER ASME Y14.5M-2009
   - 3.2 EDGES AND UNDIMENSIONED DETAILS PER ISO13715
   - 3.3 CORNERS SHOWN AS SHARP TO BE R 0.2 MAX.
   - 3.4 MARKED TEXT TO INCLUDE: RECYCLING CODE, CAVITY ID, AND VENDOR IDENTIFICATION.
   - 3.5 DATUM A5 IS SPECIFIC FOR THE MOLEX INLINE SYSTEM. THIS DATUM IS NOT APART OF THE USCAR INTERFACE
   - 3.6 CLIP SLOT FOLLOWS USCAR 7MM DESIGN STANDARD.

BILL OF MATERIALS

MOLEX P/N	DESCRIPTION	COLOR	MATERIAL	WEIGHT (IN G)	CLIP SLOT SIZE (MM)	MATING COMPONENT P/N		STATUS
						CPA OPTION	NO CPA OPTION	
2037000020	MINI50 2CKT INLINE HOUSING POL A	BLACK	PBT GF 7.5	1.47	7	N/A	34791-0020/2065230021	AVAILABLE
2037000021	MINI50 2CKT INLINE HOUSING POL B	LIGHT GRAY				N/A	34791-0021/2065230022	
2037000022	MINI50 2CKT INLINE HOUSING POL C	DARK GRAY				N/A	34791-0022/2065230023	
2037000023	MINI50 2CKT INLINE HOUSING POL D	GREEN				N/A	34791-0023/2065230024	
2037000080	MINI50 8CKT INLINE HOUSING POL A	BLACK		2.87		34791-5180/2065232081	34791-0180/2065230081	AVAILABLE
2037000081	MINI50 8CKT INLINE HOUSING POL B	LIGHT GRAY				34791-5181/2065232082	34791-0181/2065230082	
2037000082	MINI50 8CKT INLINE HOUSING POL C	DARK GRAY				34791-5182/2065232083	34791-0182/2065230083	

A5 A5

3.6

REV	DESCRIPTION
A5	1. THE 4CKT IS NOT DEVELOP, REMOVED A4 VERSION UPDATE 2. UPDATE THE "MATING COMPONET P/N"
A4	PAGE 1: ADDED 4CKT VIEWS & PART INFO ON BOM PAGE 2: ADDED 4CKT DIMS TO VARIABLE TABLE; ADDED DIM H
A3	PAGE 2: SERIES NUMBER CALL OUT ADDED
A2	PAGE 1: ADDED CLIP SLOT SIZE TO BOM ADDED NOTES 3.5 AND 3.6 PAGE 2: ADDED DATUM A-C CALLOUTS ADDED DIM F & G TO VARIABLE CHART TABLE
A1	PAGE 2: ADDED WEIGHT & CHANGED DIM B & DIM D
A	INITIAL RELEASE

THIS DRAWING CONTAINS INFORMATION THAT IS PROPRIETARY TO MOLEX ELECTRONIC TECHNOLOGIES, LLC AND SHOULD NOT BE USED WITHOUT WRITTEN PERMISSION

FUNCTIONAL SYMBOLS: FA = 0, FC = 0, FP = 0

DIVISIONAL SYMBOLS

DIMENSION UNITS	SCALE
MM	8:1

GENERAL TOLERANCES (UNLESS SPECIFIED)

ANGULAR TOL	± 0.5°
4 PLACES	±
3 PLACES	±
2 PLACES	±
1 PLACE	±
0 PLACES	±

DRAFT WHERE APPLICABLE MUST REMAIN WITHIN DIMENSIONS

CURRENT REV DESC: REFER TO REVISION COLUMN

STATUS: Production

DRWN:	Leo Li	2024-07-04
CHK'D:	Ringo Hu	2024-07-05
APPR:	Colin Zhang	2024-07-08

THIRD ANGLE PROJECTION | DRAWING: D-SIZE | SERIES: 203700

molex

MINI50 MALE INLINE SALES DRAWING

PRODUCT CUSTOMER DRAWING

DOCUMENT NUMBER	DOC TYPE	DOC PART	REVISION
2037000003	PSD	000	A5

MATERIAL NUMBER	CUSTOMER	SHEET NUMBER
	GENERAL MARKET	1 OF 2

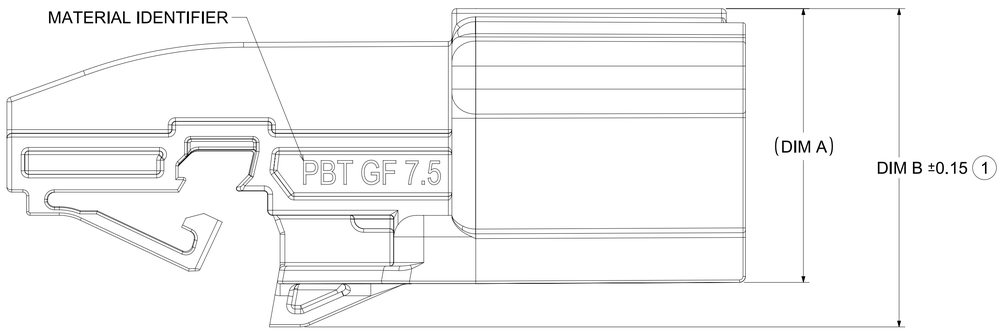

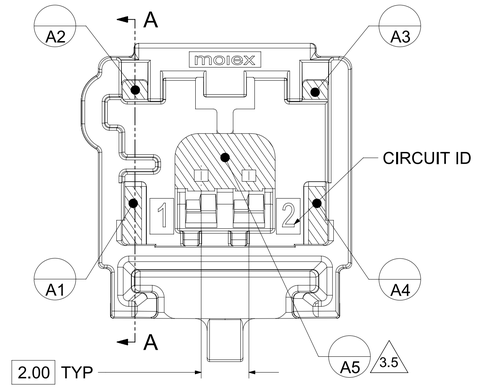

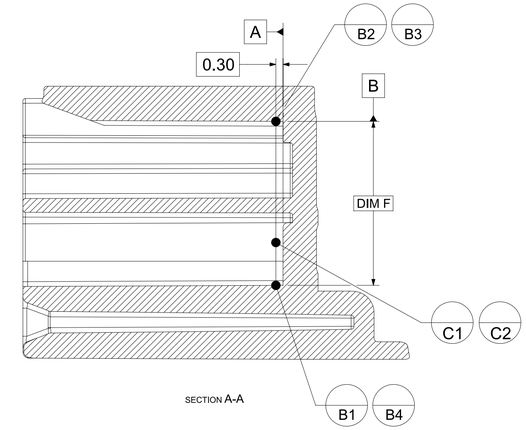

ISL IN FINAL POSITION

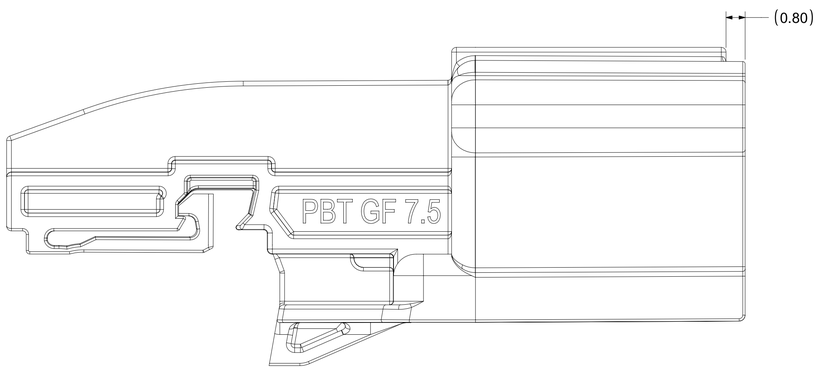

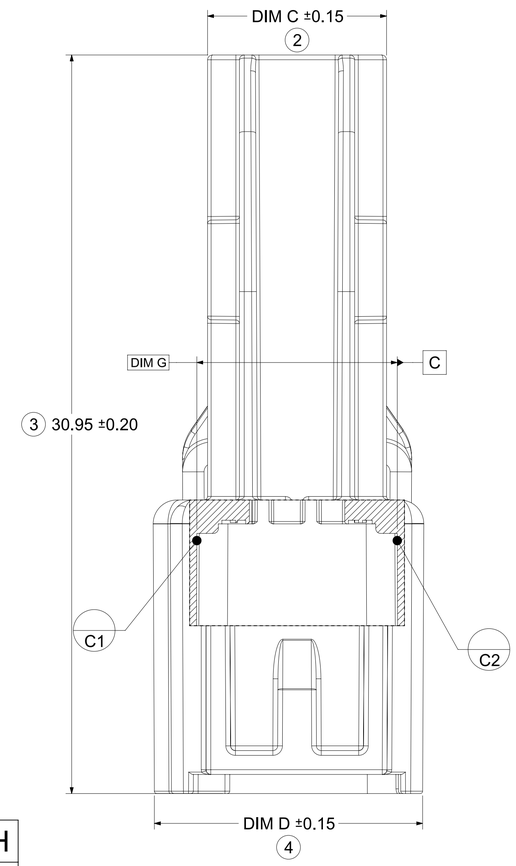

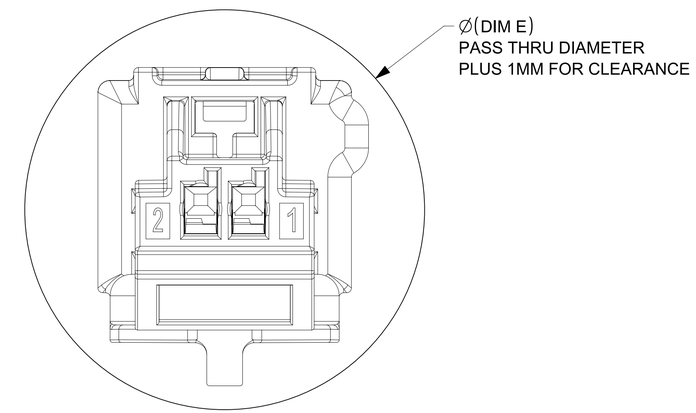

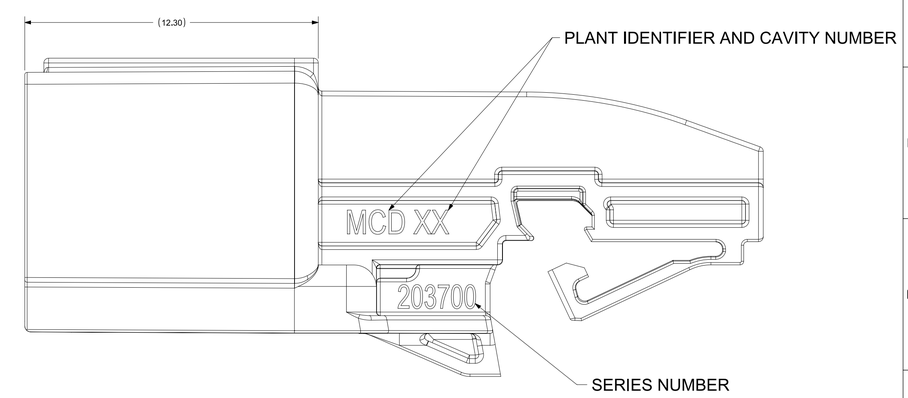

VARIABLE DIMENSION TABLE

PART NO	DIM A	DIM B	DIM C	DIM D	DIM E	DIM F	DIM G	DIM H
2037000020	11.47	13.34	7.50	11.24	16.76	6.87	8.40	30.95
2037000021								
2037000022								
2037000023								
2037000080	12.01	13.81	19.70	22.63	27.00	7.87	20.40	30.95
2037000081								
2037000082								

FUNCTIONAL SYMBOLS
FA = 0
FC = 0
FP = 0
DIVISIONAL SYMBOLS

THIS DRAWING CONTAINS INFORMATION THAT IS PROPRIETARY TO MOLEX ELECTRONIC TECHNOLOGIES, LLC AND SHOULD NOT BE USED WITHOUT WRITTEN PERMISSION

DIMENSION UNITS	SCALE
MM	8:1

GENERAL TOLERANCES (UNLESS SPECIFIED)

ANGULAR TOL	±	0.5°
4 PLACES	±	
3 PLACES	±	
2 PLACES	±	
1 PLACE	±	
0 PLACES	±	

DRAFT WHERE APPLICABLE MUST REMAIN WITHIN DIMENSIONS

CURRENT REV DESC: REFER TO REVISION COLUMN

STATUS: Production
DRWN: Leo Li 2024-07-04
CHK'D: Ringo Hu 2024-07-05
APPR: Colin Zhang 2024-07-08

THIRD ANGLE PROJECTION

DRAWING	SERIES
D-SIZE	203700

molex

MINI50 MALE INLINE SALES DRAWING

PRODUCT CUSTOMER DRAWING

DOCUMENT NUMBER	DOC TYPE	DOC PART	REVISION
2037000003	PSD	000	A5

MATERIAL NUMBER	CUSTOMER	SHEET NUMBER
	GENERAL MARKET	2 OF 2