Jul.1.2024 Copyright 2024 HIROSE ELECTRIC CO., LTD. All Rights Reserved.
In case of consideration for using Automotive equipment / device which demand high reliability, kindly contact our sales window correspondents.

MATING FIGURE

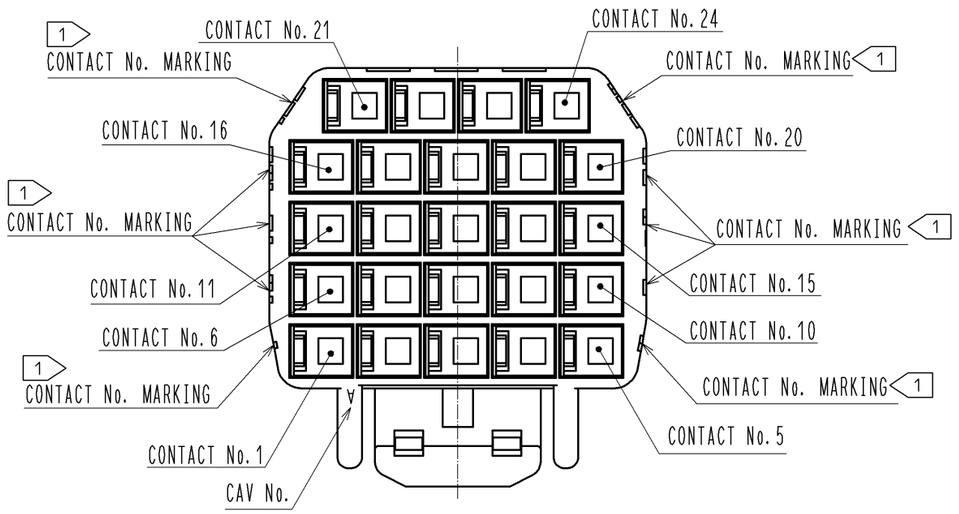

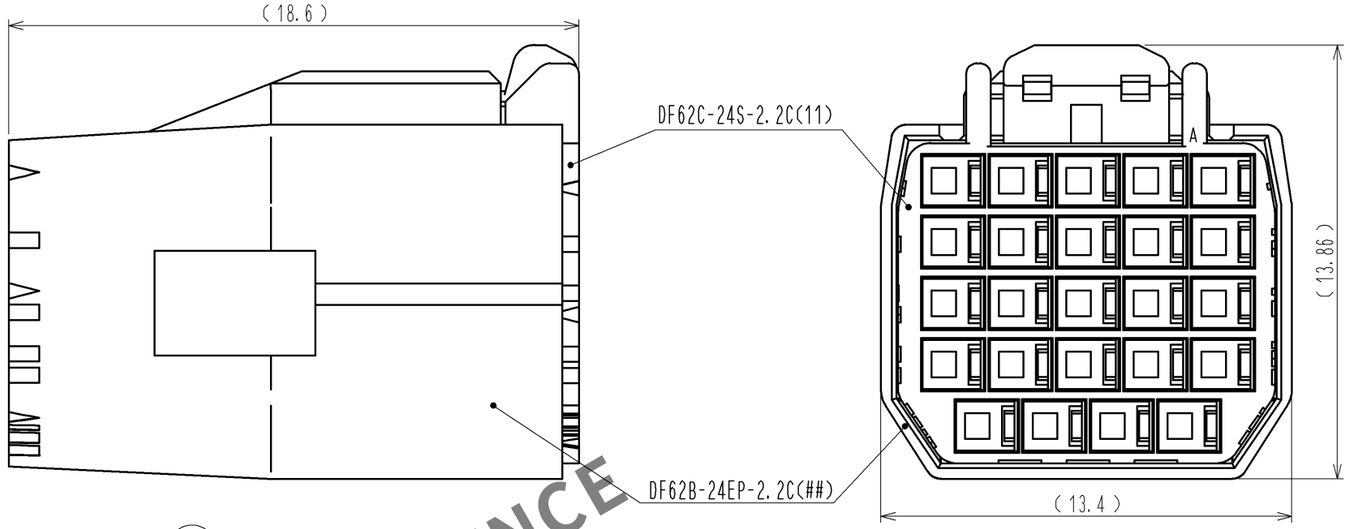

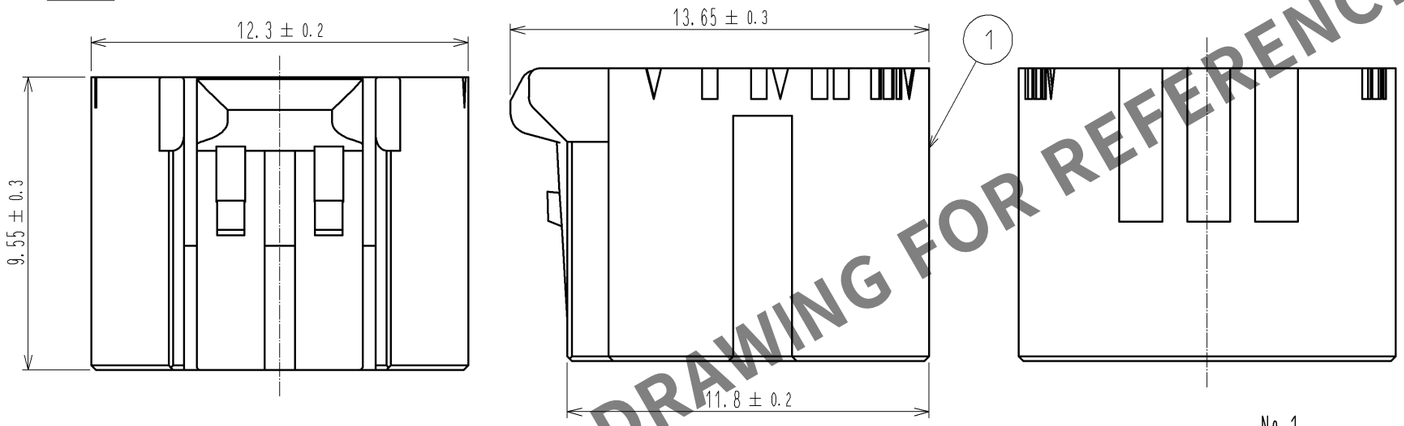

HRS DRAWING FOR REFERENCE

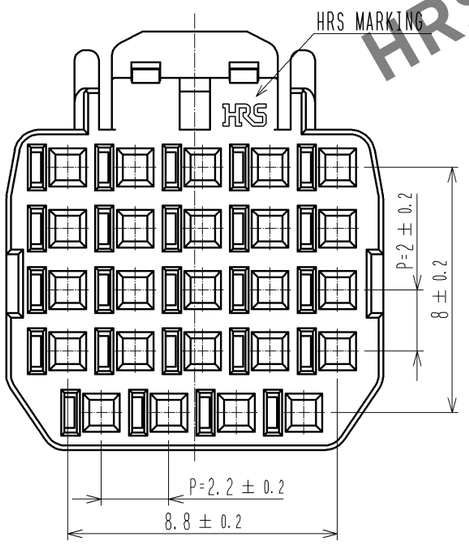

1 FIGURE-1 CONTACT No. MARKING (10:1)

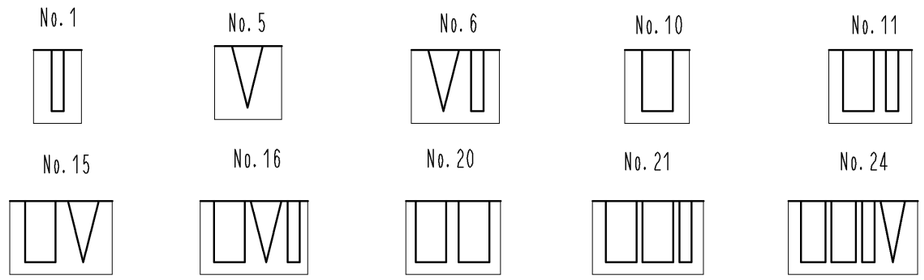

NOTE. 1 MARKINGS AT THE INDICATED POSITIONS ARE CONTACT NO. MARKING. AND SHAPES ARE SHOWN IN FIGURE-1.
2. PER PACK : 100 PIECES.
3. THE DIMENSIONS IN PARENTHESIS ARE FOR REFERENCE.

NO.	MATERIAL	FINISH , REMARKS	NO.	MATERIAL	FINISH , REMARKS
			1	PBT	UL94V-0 (BLACK)

UNITS	SCALE	COUNT	DESCRIPTION OF REVISIONS	DESIGNED	CHECKED	DATE
mm	5 : 1					

HIROSE ELECTRIC CO., LTD.	APPROVED : KI. AKIYAMA	13. 09. 17	DRAWING NO.	EDC3-348676-01
	CHECED : OM. MIYAMOTO	13. 09. 13	PART NO.	DF62C-24S-2. 2C(11)
	DESIGNED : TH. YOSHIZAWA	13. 09. 13	CODE NO.	CL544-0541-6-11
	DRAWN : MI. SAKIMURA	13. 09. 09		1/1

FORM HC0011-5-7_AN