THIS DRAWING IS UNPUBLISHED. RELEASED FOR PUBLICATION 20
© COPYRIGHT 20 BY - ALL RIGHTS RESERVED.

REVISIONS

P	LTR	DESCRIPTION	DATE	DWN	APVD
	A	RELEASED PER ECO 15-013858	10-1-15	CT	KH

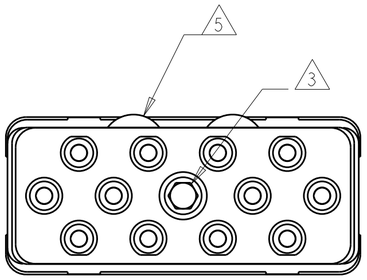

MATING FACE

1. FRONT HOUSING & REAR HOUSING: THERMOSETTING PLASTIC PER ASTM D5948
   SLEEVE HOLDER HOUSINGS: HIGH-TEMP THERMOPLASTIC PER ASTM D4067
   TERMINI RETENTION CLIPS: COPPER ALLOY PER ASTM B194
   SLEEVE HOLDER SCREW, HOUSING NUT, REAR RETAINING SCREW: STAINLESS STEEL PER AISI 303.
   REAR GROMMET & INTERFACIAL SEAL: FLUOROSILICONE ELASTOMER PER MIL-R-25988B EXCEPT 4.6.6.1
   SLEEVES: ZIRCONIA
2. THE SLEEVE HOLDER IS ALSO AVAILABLE SEPARATELY TE P/N 2102166-1.
3. HEX KEY SLOT FOR 9/64 ALLEN WRENCH FOR SLEEVE HOLDER REMOVAL;
   RECOMMENDED INSTALLATION TORQUE: 0.2-0.25 N-m
4. DATE CODE: YEAR & WEEK (YY WW)
5. KEYING FEATURES: TWO PROTRUSIONS FOR KEYING CODE B
6. DESCRIPTIVE PART NUMBER GPRBEF12CSB
   THIS INSERT CONTAINS: 12 CAVITIES FOR SIZE 16 ARINC 801 OPTICAL CONTACTS.
7. THIS PRODUCT IS SOLD BY TE CONNECTIVITY UNDER A LICENSE FROM RADIALL SA.

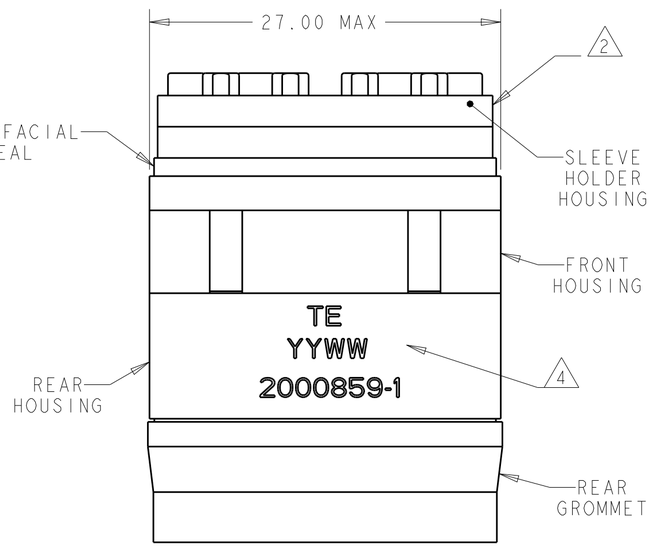

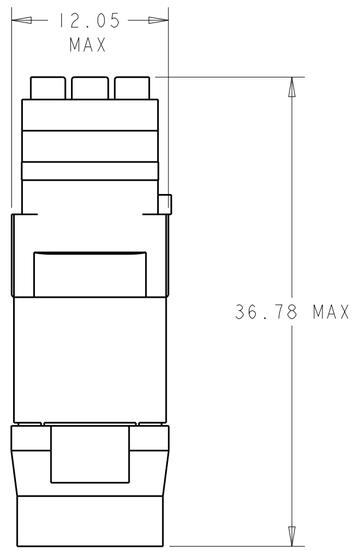

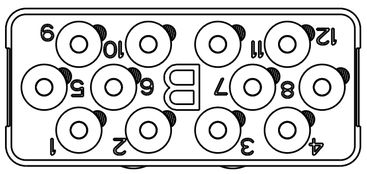

REAR FACE

2000859-1

PART NUMBER

THIS DRAWING IS A CONTROLLED DOCUMENT.

DIMENSIONS: mm

TOLERANCES UNLESS OTHERWISE SPECIFIED:
0 PLC ±-
1 PLC ±-
2 PLC ±0.1
3 PLC ±0.13
4 PLC ±-
ANGLES ±-

MATERIAL 1

FINISH -
-

DWN R FLAIG 05JAN2010
CHK J MOSIER 05JAN2010
APVD J MOSIER 05JAN2010

PRODUCT SPEC -
APPLICATION SPEC -
WEIGHT -

TE Connectivity

NAME INSERT ASSEMBLY, WITH SLEEVE HOLDER, ENVIRONMENTAL, F12C (COMPOSITE), KEY B, GPRB

SIZE	CAGE CODE	DRAWING NO	RESTRICTED TO
A2	00779	C-2000859	-

Customer Drawing | SCALE 3:1 | SHEET 1 OF 1 | REV A

1471-9 (3/13)