SAMZO | REAC/ROHS

REV	ECN NO	DESRIPTION	DESIGN	APPROVAL	DATE
A1	NEW	Replace frame			2013.02.12

技术要求:
Technical requirements:
1.打铜底0.5-1UM,镍底2-2.5UM,哑锡3-5UM。
Copper base 0.5 - 1 UM, nickel base 2 - 2.5 UM, matte tin 3 - 5 UM.
2.不得有脚变形，毛刺等缺陷。
There shall be no defects such as pin deformation and burrs.
3.插脚尖部符合可焊性要求。
The tip of the insertion pin shall meet the solderability requirements.
4.螺纹需符合通止规要求。
The thread shall meet the requirements of the go and no-go gauge.
5.材质：黄铜H62.
Material: Brass H62.
6.过载电流：40A
Overload current: 40A
7.牙孔规格 M4
The specification of the threaded hole M4
8.未标注尺寸公差值按GB/T1184-1996H级
Unmarked dimensional tolerance values are in accordance with Grade H of GB/T1184-1996
9.螺丝扭力：2.0Nm
Screw torque：2.0Nm
10.盐雾试验：48小时
Salt spray test：48H

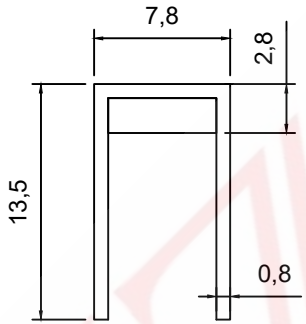

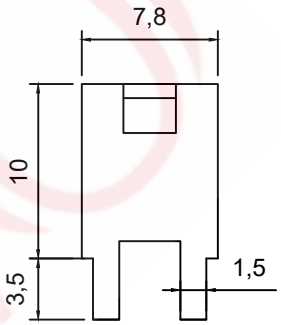

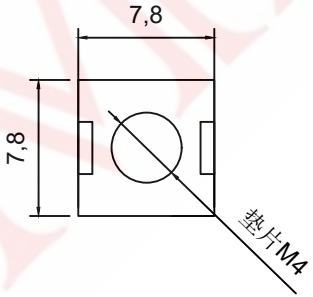

78 100 35 C D4

- Pressing hole specification: M4
- Mold number: CS035
- Pin height: 3.5mm
- Height above the board: 10.0mm
- Specification size: 7.8*7.8mm

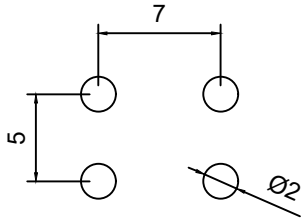

PCB LAYOUT

ITEM	DESCRIPTION	MATERIAL	QTY	FINSH/COLOR					
A	Subject	H62(Y2)	1	tin plating					
A	Gasket	SPCC	1	tin plating				GENERAL TOLERANCE	
								⩾0~2<	±0.15
					DESIGN	WANGGUIFA	2018.06.12	⩾2~5<	±0.25
					CHECKED	ZHENGUILAN	2018.06.12	⩾0~2<	±0.15
F					APPROVED	LILIANJIANG	2018.06.14	⩾5	±0.35

FIRST VIEW

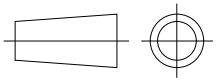

SCALE 1:1 UNIT mm

The copyright belongs to samzo parts [China] Co., Ltd. please use the material after samzo parts agree to authorize. The final right of interpretation belongs to samzo parts.
WWW.KKK-JP.COM

SAMZO COMPONENTS
Electronic switch and connector manufacturer

TITLE:: 7.8*7.8*13.5mm
DWG NO: 78C-P035
PART NO: 78C-131021
MODEL NO: 7810035CD4
NAME: PCB soldering terminal