Alle Rechte vorbehalten/ *All rights reserved*

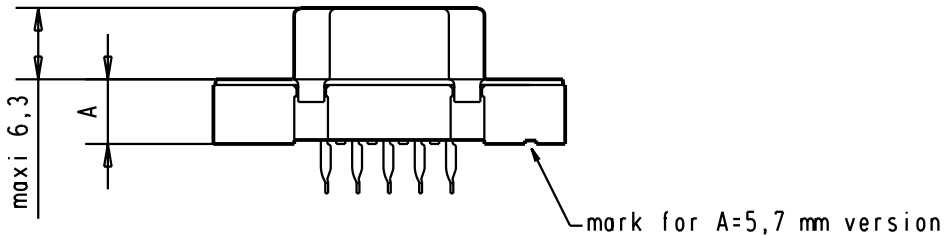

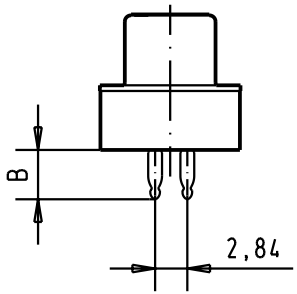

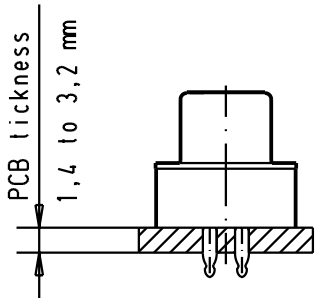

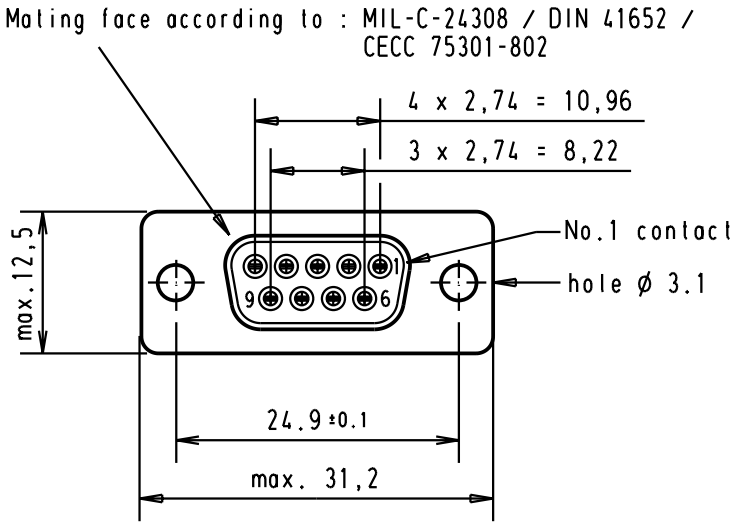

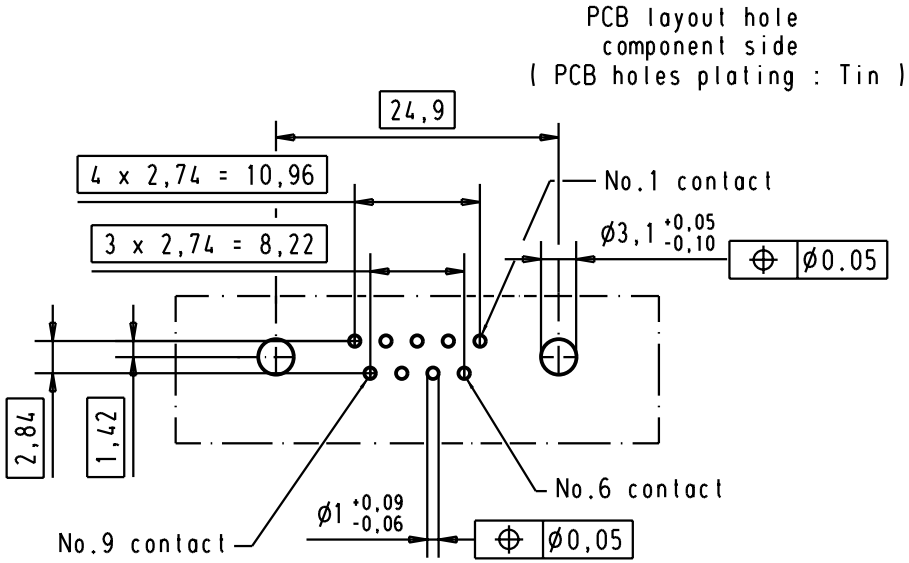

09661147500	3	6	4.20				
09661146500	2	6	4.20				
09661145500	0.76 µm Au	6	4.20				
09661147504	3	5.7	4.35		31079	29-AUG-02	CV
09661146504	2	5.7	4.35		27980	05/03/01	jfb
09661145504	0.76 µm Au	5.7	4.35		16236	30/06/95	jfb
Part number	Performance level	A ±0.2	B ±0.2		Mod.	Dat.	Name

	Dat.	Name
Detail.	08/12/94	jfb
Insp.		
Stand.		

All Dim. in mm
Orig. Size DIN A 3

D-Sub 09 poles straight female connector with press-in termination,version ø 3.1 hole.

Maßstab/ *Scale* 2,5:1

HARTING EURL
F-95972 Paris

TB 0966114x50x

Sub.

Blatt/ *Page* 1

Downloaded from Arrow.com.