SD-39860-004

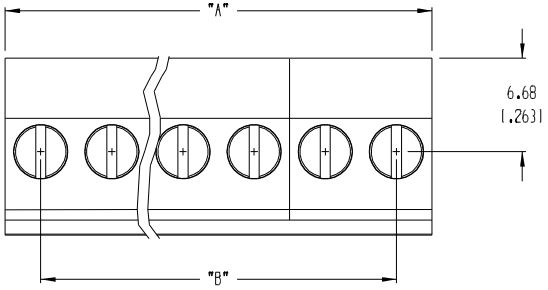

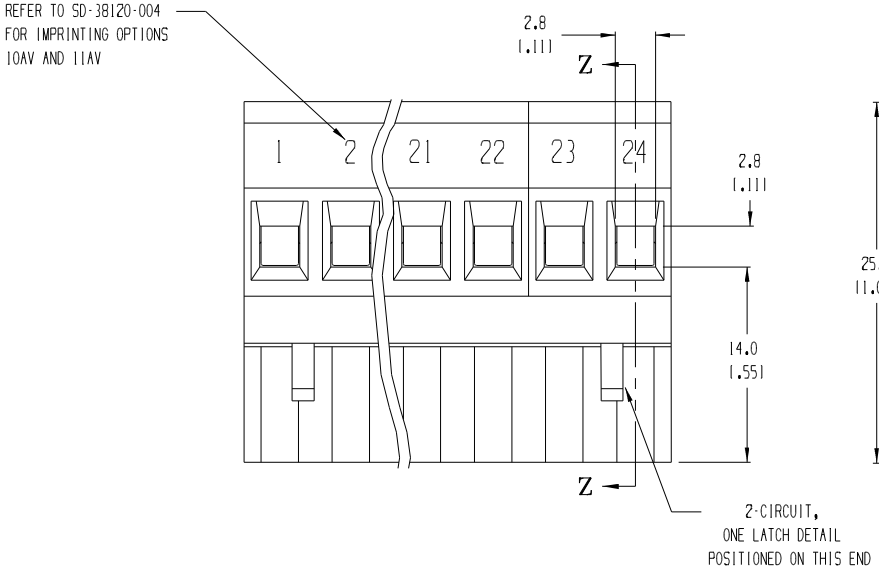

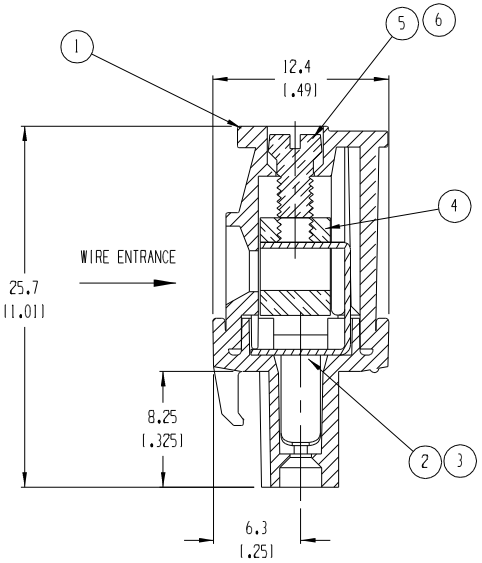

SECT "Z-Z"

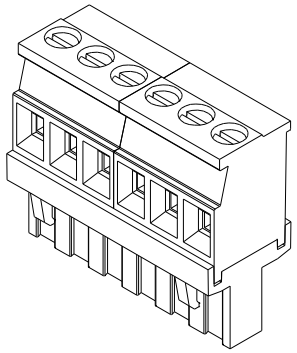

SCALE 2:1

NOTES:

1. MATERIAL: SEE TABLE
2. FINISHES: SEE TABLE
3. PRODUCT SPECIFICATION: NOT REQUIRED
4. PACKAGING: NOT REQUIRED
5. MATES WITH: 86 SERIES HEADER
6. INCH DIMS ARE SHOWN IN BRACKETS [XXX]
7. "XX" REFERS TO THE NUMBER OF CIRCUITS
8. REFER TO SD-38120-004 FOR IMPRINTING OPTIONS (10AV AND 11AV)

ITEM	QTY.	DESCRIPTION	MATERIAL	FINISH
6	"XX"	SCREW, M3 X 0.5, BRONZE (-49, -G30 OPTION)	PHOS. BRONZE	TIN
5	"XX"	SCREW, M3 X 0.5, SLOTTED	STEEL	ZN, CLEAR CHROMATE
4	"XX"	CAGE	BRASS	NICKEL
3	"XX"	TERMINAL (-G30 OPTION)	PHOS. BRONZE	GOLD
2	"XX"	TERMINAL	PHOS. BRONZE	TIN
1	1	INSULATOR	POLYAMIDE	SEE CHART ON SHEET 2

EC NO. ECN# 3997
DRWN: CY 01-26-05
CH'K:
APPR:

REV	DESCRIPTION
E	

QUALITY SYMBOLS
MAJOR
CRITICAL
SPC

GENERAL TOLERANCES: (UNLESS SPECIFIED)

	mm	INCH
4 PLACES		±.0015
3 PLACES	±.038	±.005
2 PLACES	±.13	±.01
1 PLACE	±.3	
ANGULAR:	±2°	

DRAFT WHERE APPLICABLE MUST REMAIN WITHIN DIMENSIONS

SCALE 3:1
DESIGN UNITS ☐ mm ☒ INCH
THIRD ANGLE PROJECTION

DRAWN BY & DATE R. KEMP 1-23-03
CHECKED BY & DATE R. STONE 1-23-03
APPROVED BY & DATE P. WALTZ 1-24-03
CAD FILENAME 8609XX

PROJECT NO. -
DIMENSIONS: ☒ mm/INCH ☐ INCH/mm ☐ mm ONLY
SHT -
REV -
REVISE ON CAD ONLY

TITLE:
VERTICAL PLUGGABLE SR BTS FWE ASSY
(5.08 [.200] CENTERS)

MOLEX INCORPORATED

MATERIAL NO. SEE SHEET 2
DRAWING NO. SD-39860-004
SHEET NO. 1 OF 2
SIZE B

THIS DRAWING CONTAINS INFORMATION THAT IS PROPRIETARY TO MOLEX INCORPORATED AND SHOULD NOT BE USED WITHOUT WRITTEN PERMISSION.

NUMBER OF CIRCUITS "XX"	DIM. "A"	DIM. "B"	MATERIAL NO. (STANDARD) BLACK INSULATOR	MATERIAL NO. (-G30 OPTION) BLACK INSULATOR	MATERIAL NO. (-49 OPTION) BLACK INSULATOR	MATERIAL NO. (-10AV OPTION) BLACK INSULATOR	MATERIAL NO. (-11AV OPTION) BLACK INSULATOR	MATERIAL NO. (-GRN OPTION) GREEN INSULATOR E	MATERIAL NO. (-GRN-10AV OPTION) GREEN INSULATOR E
02	10.2 [.40]	5.08 [.200]	398600302	398610302	398640302	398620302	398630302	398603302	
03	15.2 [.60]	10.16 [.400]	398600303	398610303	398640303	398620303	398630303	398603303	
04	20.3 [.80]	15.24 [.600]	398600304	398610304	398640304	398620304	398630304	398603304	
05	25.4 [1.00]	20.32 [.800]	398600305	398610305	398640305	398620305	398630305	398603305	
06	30.5 [1.20]	25.40 [1.000]	398600306	398610306	398640306	398620306	398630306	398603306	
07	35.6 [1.40]	30.48 [1.200]	398600307	398610307	398640307	398620307	398630307	398603307	
08	40.6 [1.60]	35.56 [1.400]	398600308	398610308	398640308	398620308	398630308	398603308	398690215
09	45.7 [1.80]	40.64 [1.600]	398600309	398610309	398640309	398620309	398630309	398603309	
10	50.8 [2.00]	45.72 [1.800]	398600310	398610310	398640310	398620310	398630310	398603310	
11	55.9 [2.20]	50.80 [2.000]	398600311	398610311	398640311	398620311	398630311	398603311	
12	61.0 [2.40]	55.88 [2.200]	398600312	398610312	398640312	398620312	398630312	398603312	
13	66.0 [2.60]	60.96 [2.400]	398600313	398610313	398640313	398620313	398630313	398603313	
14	71.1 [2.80]	66.04 [2.600]	398600314	398610314	398640314	398620314	398630314	398603314	
15	76.2 [3.00]	71.12 [2.800]	398600315	398610315	398640315	398620315	398630315	398603315	
16	81.3 [3.20]	76.20 [3.000]	398600316	398610316	398640316	398620316	398630316	398603316	
17	86.4 [3.40]	81.28 [3.200]	398600317	398610317	398640317	398620317	398630317	398603317	
18	91.4 [3.60]	86.36 [3.400]	398600318	398610318	398640318	398620318	398630318	398603318	
19	96.5 [3.80]	91.74 [3.600]	398600319	398610319	398640319	398620319	398630319	398603319	
20	101.6 [4.00]	96.82 [3.800]	398600320	398610320	398640320	398620320	398630320	398603320	
21	106.7 [4.20	101.90 [4.000]	398600321	398610321	398640321	398620321	398630321	398603321	
22	111.8 [4.40]	106.68 [4.200]	398600322	398610322	398640322	398620322	398630322	398603322	
23	116.8 [4.60]	111.76 [4.400]	398600323	398610323	398640323	398620323	398630323	398603323	
24	121.9 [4.80]	116.84 [4.600]	398600324	398610324	398640324	398620324	398630324	398603324	

SEE SHEET 1

EC NO.
DRWN:
CH'K:
APPR:
DESCRIPTION
REV

QUALITY SYMBOLS
MAJOR
CRITICAL C
SPC S

GENERAL TOLERANCES: (UNLESS SPECIFIED)

	mm	INCH
4 PLACES		±.0015
3 PLACES	±.038	±.005
2 PLACES	±.13	±.01
1 PLACE	±.3	

ANGULAR: ±2°

DRAFT WHERE APPLICABLE MUST REMAIN WITHIN DIMENSIONS

SCALE -
DESIGN UNITS ☐ mm ☒ INCH
THIRD ANGLE PROJECTION

DRAWN BY & DATE R. KEMP 1-23-03
CHECKED BY & DATE R. STONE 1-23-03
APPROVED BY & DATE P. WALTZ 1-24-03
CAD FILENAME 8609XX

PROJECT NO. -
DIMENSIONS: ☒ mm/INCH ☐ INCH/mm ☐ mm ONLY
SHT -
REV -
REVISE ON CAD ONLY

TITLE:
VERTICAL PLUGGABLE SR BTS FWE ASSY
(5.08 [.200] CENTERS)

MOLEX INCORPORATED

MATERIAL NO. SEE CHART
DRAWING NO. SD-39860-004
SHEET NO. 2 OF 2
SIZE B

THIS DRAWING CONTAINS INFORMATION THAT IS PROPRIETARY TO MOLEX INCORPORATED AND SHOULD NOT BE USED WITHOUT WRITTEN PERMISSION.

Mouser Electronics

Authorized Distributor

Click to View Pricing, Inventory, Delivery & Lifecycle Information:

Molex:

39860-0306 39860-0304 39860-0303 39860-0302