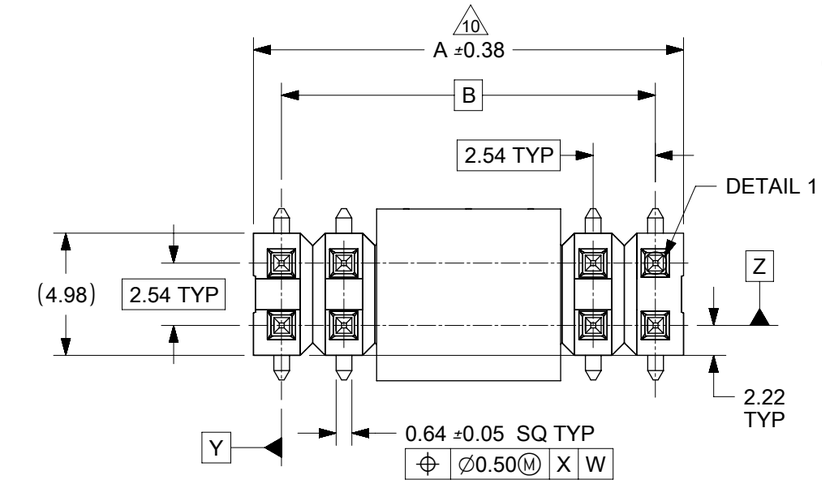


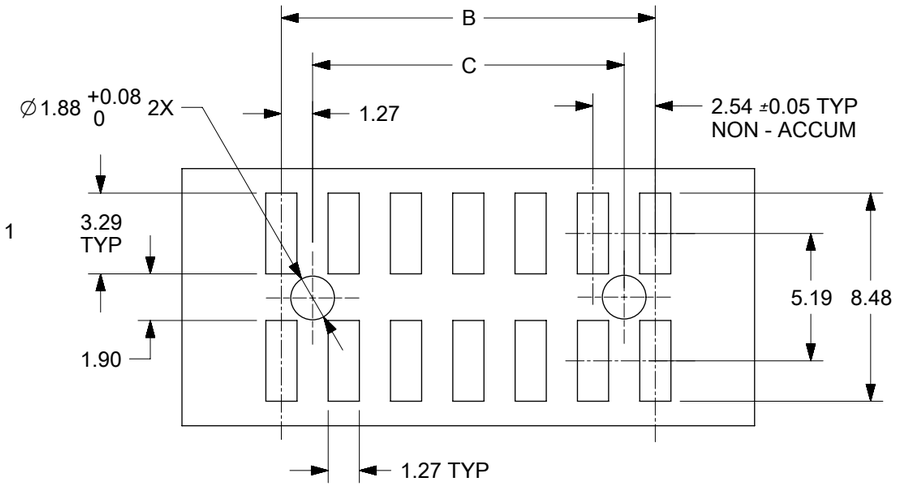


RECOMMENDED PCB LAYOUT

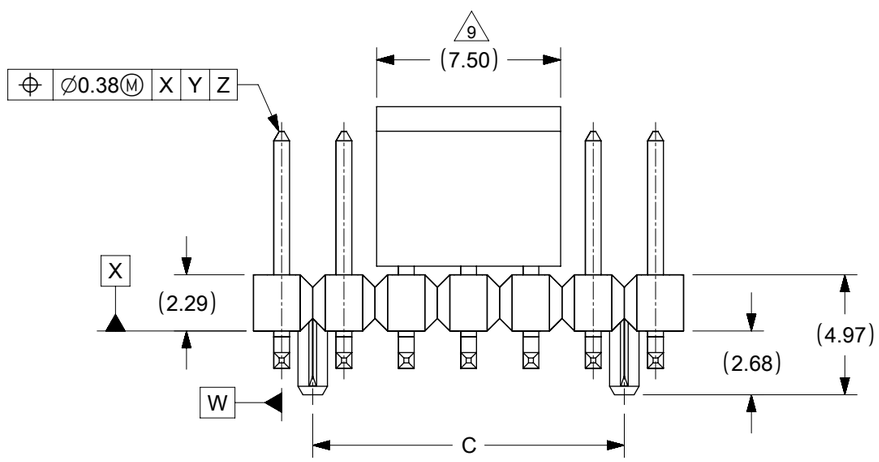


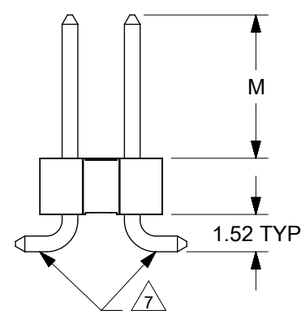


PART WITHOUT PEGS

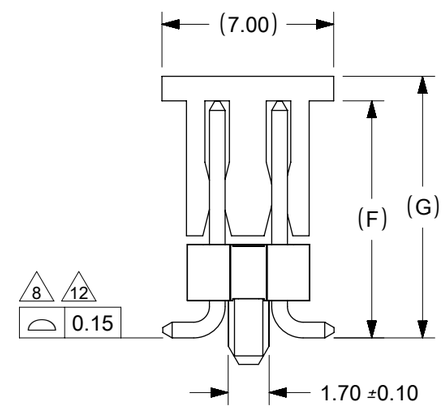


PART WITH PEGS

NOTES:

1. MATERIAL:
   HSG: LCP, GLASS-FILLED, UL94V-0, COLOR: BLACK
   CAP: NYLON, GLASS-FILLED, UL94V-0, COLOR: BLACK
   PIN: 0.64MM SQ, COPPER ALLOY
2. PLATING TYPE:
   (1) : 0.38µm MIN. GOLD PLATE ON CONTACT AND 2.00µm MIN. TIN ON SOLDERTAIL OVER 1.25µm MIN. NICKEL OVERALL.
   (2) : 0.75µm MIN. GOLD PLATE ON CONTACT AND 2.00µm MIN. TIN ON SOLDERTAIL OVER 1.25µm MIN. NICKEL OVERALL.
   (3) : 2.50µm MIN. TIN IN SELECTED AREA OVER 1.25µm MIN. NICKEL OVERALL.
3. PACKAGING TYPE: SEE TABLE
4. RECOMMENDED PCB THICKNESS 1.60±0.10mm
5. PRODUCT SPECIFICATION: PS-87920-019
6. WAFER TO BE FLAT WITHIN 0.003mm/mm
7. BEND DEPRESSION IS ACCEPTED SO LONG AS IT DOES NOT AFFECT THE OVERALL COPLANARITY OF TAIL.
8. COPLANARITY IS TO BE MEASURED BY RESTING THE SOLDER TAIL ON A FLAT SURFACE.
9. CAP LOCATION IS CENTERED ALONG THE MATING ENDS AS SHOWN. TOP SURFACE OF CAP TO BE FLAT FOR THE PURPOSE OF PICK & PLACE CAP BY VACUUM SUCTION NOZZLE.
10. IRREGULAR CIRCUIT CUTOFF WITHIN BREAKAWAY SECTION IS PREMISSIBLE. CUTTING OR CHIPPING OF THE MAIN BODY IS NOT ACCEPTABLE.
11. PARTS ARE NOT STACKABLE ON 2.54 CENTER.
12. COPLANARITY FOR SIZES UP TO 40 IS 0.15MM.
13. THE ABOVE CKT 14 IS FOR ILLUSTRATION PURPOSE ONLY.
14. TUBE LENGTH IS 560MM PER STANDARD.
15. PACKAGING SPECIFICATION:
    TUBE: PK-89990-478
    TAPE & REEL: PK-89990-479
    TRAY: PK-89990-489

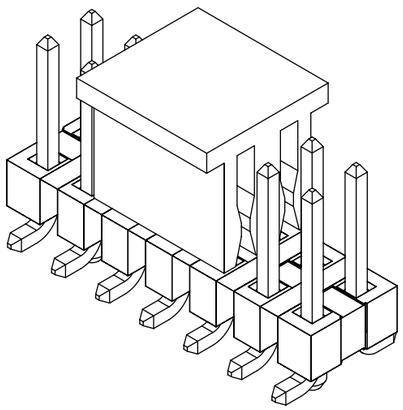

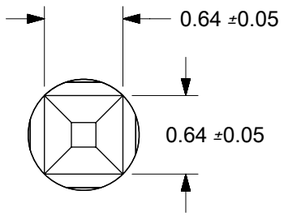


DETAIL 1

THIS DRAWING CONTAINS INFORMATION THAT IS PROPRIETARY TO MOLEX ELECTRONIC TECHNOLOGIES, LLC AND SHOULD NOT BE USED WITHOUT WRITTEN PERMISSION

| | | |
|---|---|---|
| EC NO: 168769 | DRWN: GGUNAGI | CHK'D: KHLIM | APPR: KHLIM |
| 2017/11/23 | 2018/06/19 | 2018/06/19 |
| MIGRATED TO NX | | |
| C2 | REV | |

GENERAL TOLERANCES (UNLESS SPECIFIED)

| | MM | INCH |
|---|---|---|
| 4 PLACES | ± | ± |
| 3 PLACES | ± | ± |
| 2 PLACES | ± 0.2 | ± |
| 1 PLACES | ± | ± |
| 0 PLACES | ± | ± |

ANGULAR TOL ± 3.0

DRAFT WHERE APPLICABLE MUST REMAIN WITHIN DIMENSIONS

| | |
|---|---|
| DIMENSION UNITS: MM | SCALE: NTS |
| DRWN BY: SKLIM01 | DATE: 2006/05/25 |
| CHK'D BY: PATEY | DATE: 2006/07/05 |
| APPR BY: PATEY | DATE: 2006/07/05 |
| DRAWING SIZE: A3 | THIRD ANGLE PROJECTION |

molex®

CUSTOM HEADER
C-GRID HDR, SMT W/CAP WITH/WITHOUT LOC. PEGS

PRODUCT CUSTOMER DRAWING

| SERIES | MATERIAL NUMBER | CUSTOMER |
|---|---|---|
| 87920 | SEE TABLE | GENERAL MARKET |

| DOCUMENT NUMBER | DOC TYPE | DOC PART | SHEET NUMBER |
|---|---|---|---|
| SD-87920-001 | PSD | 001 | 1 OF 14 |

| RELEASE STATUS | P1 | RELEASE DATE | 2018/06/19 16:18:34 |
|---|---|---|---|

FORMAT: Met-lega-master-tb-prod-A3
REVISION: C
DATE: 2017/02/06

## CIRCUITS POSITION CONFIGURATION

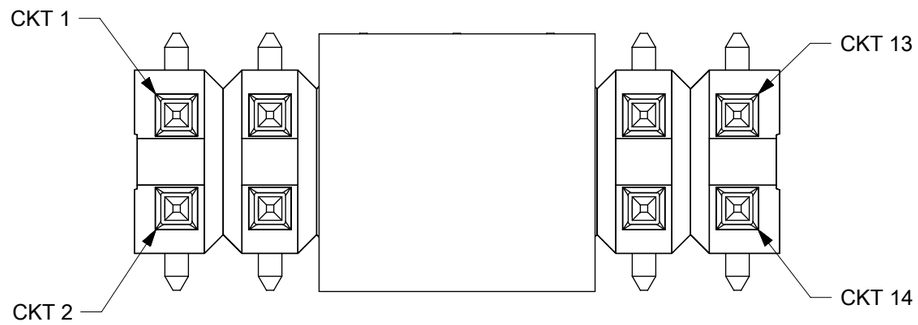


## ORIENTATION OF PART IN TUBE

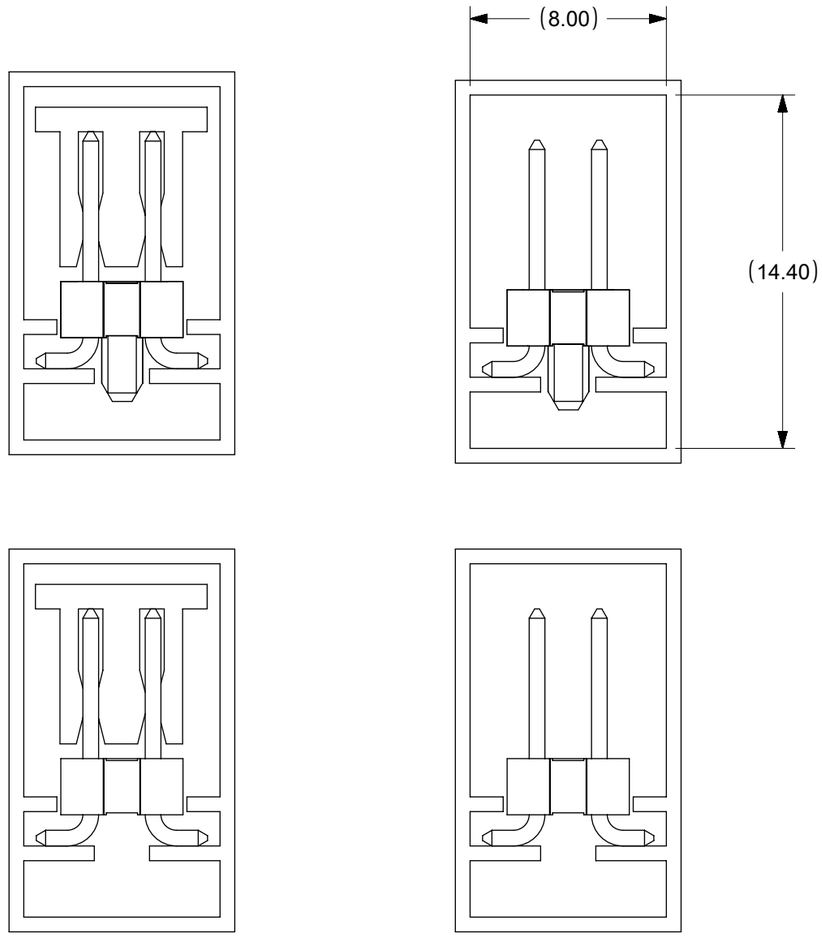


THIS DRAWING CONTAINS INFORMATION THAT IS PROPRIETARY TO MOLEX ELECTRONIC TECHNOLOGIES, LLC AND SHOULD NOT BE USED WITHOUT WRITTEN PERMISSION

MIGRATED TO NX
EC NO: 168769 2017/11/23
DRWN: GGUNAGI 2018/06/19
CHK'D: KHLIM 2018/06/19
APPR: KHLIM

REV: C2

GENERAL TOLERANCES (UNLESS SPECIFIED)

| | MM | INCH |
|---|---|---|
| 4 PLACES | ± | ± |
| 3 PLACES | ± | ± |
| 2 PLACES | ± 0.2 | ± |
| 1 PLACES | ± | ± |
| 0 PLACES | ± | ± |

ANGULAR TOL ± 3.0

DRAFT WHERE APPLICABLE MUST REMAIN WITHIN DIMENSIONS

| DIMENSION UNITS | SCALE |
|---|---|
| MM | NTS |

| DRWN BY | DATE |
|---|---|
| SKLIM01 | 2006/05/25 |
| CHK'D BY | DATE |
| PATEY | 2006/07/05 |
| APPR BY | DATE |
| PATEY | 2006/07/05 |

DRAWING SIZE: A3

THIRD ANGLE PROJECTION

molex®

CUSTOM HEADER
C-GRID HDR, SMT W/CAP WITH/WITHOUT LOC. PEGS

PRODUCT CUSTOMER DRAWING

| SERIES | MATERIAL NUMBER | CUSTOMER |
|---|---|---|
| 87920 | SEE TABLE | GENERAL MARKET |

| DOCUMENT NUMBER | DOC TYPE | DOC PART | SHEET NUMBER |
|---|---|---|---|
| SD-87920-001 | PSD | 001 | 2 OF 14 |

| RELEASE STATUS | P1 | RELEASE DATE | 2018/06/19 16:18:34 |
|---|---|---|---|

FORMAT: Met-lega-master-ib-prod-A3
REVISION: C
DATE: 2017/02/06

| CKT | Ao | Bo | F | Ko | P1 | W |
|---|---|---|---|---|---|---|
| 04 | 7.40 | 5.40 | 7.50 | 10.80 | 12.00 | 16.00 |

THIS TYPE OF CARRIER TAPE IS FOR CKT SIZE 04 ONLY

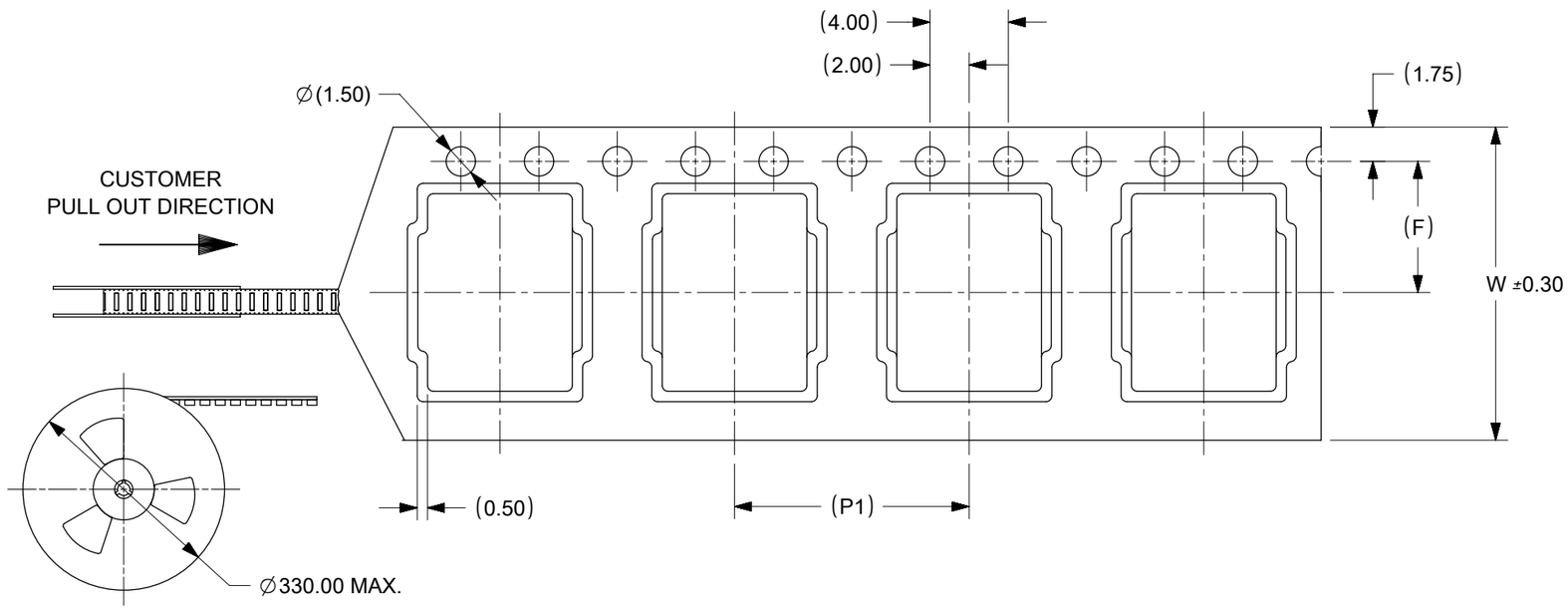


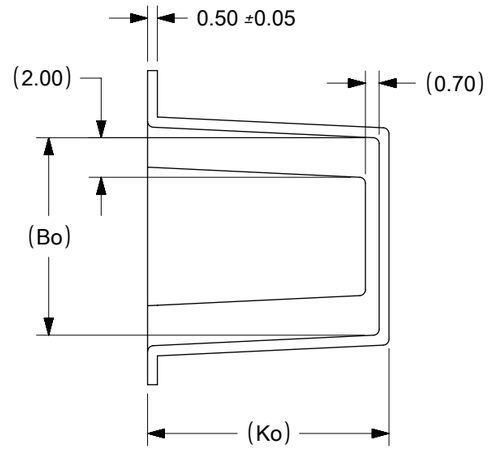


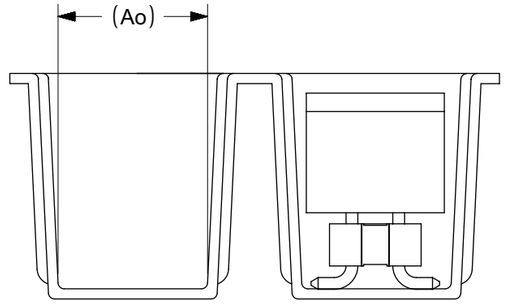


PART PACKED IN
TAPE & REEL
ORIENTATION

NOTES:
1. LEADER AND TRAILER TAPE

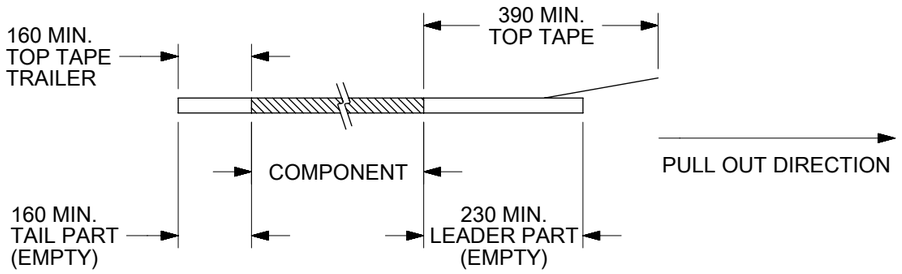


2. PEELING OFF FORCE OF THE TOP TAPE: 20-80gf.
(PEELING DIRECTION AS SHOWN IN FOLLOWING FIGURE)

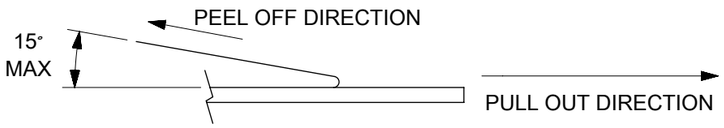


3. PACKAGING STANDARD IS AS PER EIA-481.
4. TAPE & REEL QUANTITY = 500PCS/REEL
5. THE TAPE IS TREATED FOR ANTI-STATIC.

THIS DRAWING CONTAINS INFORMATION THAT IS PROPRIETARY TO MOLEX ELECTRONIC TECHNOLOGIES, LLC AND SHOULD NOT BE USED WITHOUT WRITTEN PERMISSION

MIGRATED TO NX
EC NO: 168769 2017/11/23
DRWN: GGUNAGI 2018/06/19
CHK'D: KHLIM 2018/06/19
APPR: KHLIM

GENERAL TOLERANCES (UNLESS SPECIFIED)

| | MM | INCH |
|---|---|---|
| 4 PLACES | ± | ± |
| 3 PLACES | ± | ± |
| 2 PLACES | ± 0.2 | ± |
| 1 PLACES | ± | ± |
| 0 PLACES | ± | ± |

ANGULAR TOL ± 3.0

DRAFT WHERE APPLICABLE MUST REMAIN WITHIN DIMENSIONS

REV C2

DIMENSION UNITS: MM
SCALE: NTS
DRWN BY: SKLIM01 DATE: 2006/05/25
CHK'D BY: PATEY DATE: 2006/07/05
APPR BY: PATEY DATE: 2006/07/05
DRAWING SIZE: A3
THIRD ANGLE PROJECTION

molex®

CUSTOM HEADER
C-GRID HDR, SMT W/CAP WITH/WITHOUT LOC. PEGS

PRODUCT CUSTOMER DRAWING

| SERIES | MATERIAL NUMBER | CUSTOMER |
|---|---|---|
| 87920 | SEE TABLE | GENERAL MARKET |

| DOCUMENT NUMBER | DOC TYPE | DOC PART | SHEET NUMBER |
|---|---|---|---|
| SD-87920-001 | PSD | 001 | 3 OF 14 |

| RELEASE STATUS | P1 | RELEASE DATE | 2018/06/19 16:18:34 |
|---|---|---|---|

FORMAT: Met-lega-master-tb-prod-A3
REVISION: C
DATE: 2017/02/06

| CKT | Ao | Bo | F | Ko | P1 | W |
|---|---|---|---|---|---|---|
| 06 | 7.40 | 8.17 | 11.50 | 10.80 | 12.00 | 24.00 |

THIS TYPE OF CARRIER TAPE IS FOR CKT SIZE 06 ONLY

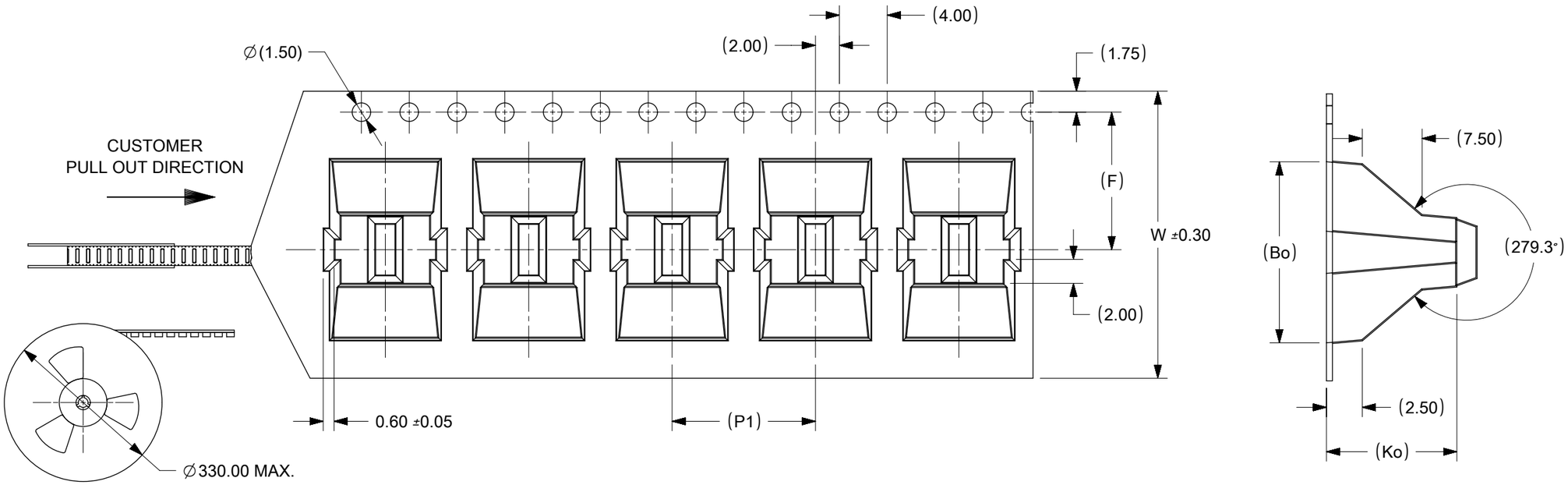


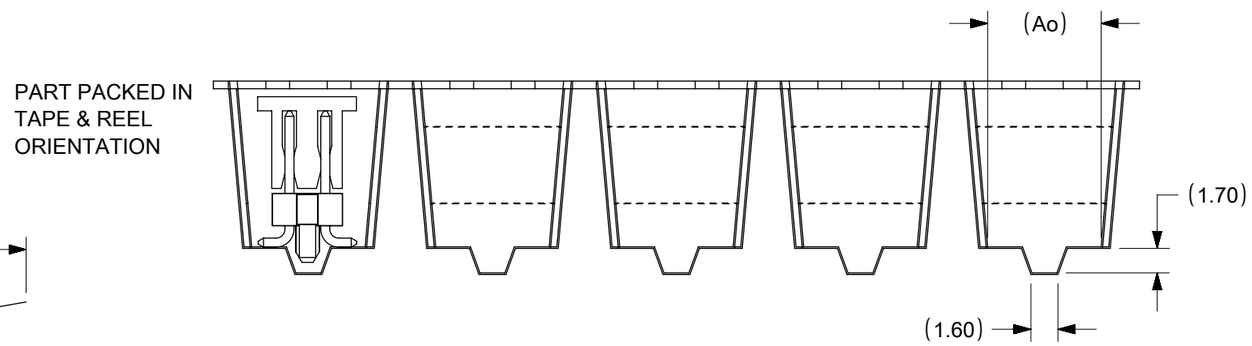


NOTES:

1. LEADER AND TRAILER TAPE

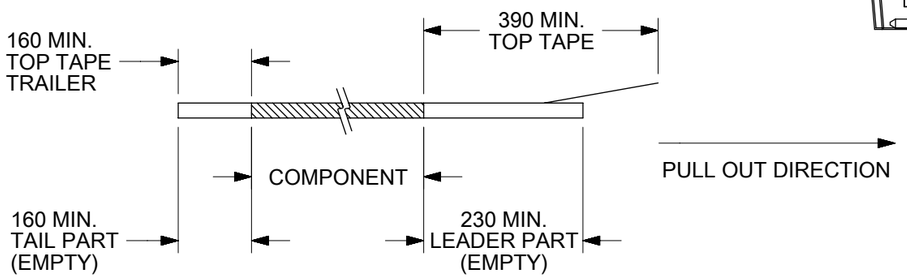


2. PEELING OFF FORCE OF THE TOP TAPE: 20-80gf.
   (PEELING DIRECTION AS SHOWN IN FOLLOWING FIGURE)

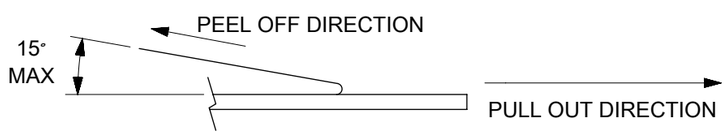


3. PACKAGING STANDARD IS AS PER EIA-481.
4. TAPE & REEL QUANTITY = 440PCS/REEL
5. THE TAPE IS TREATED FOR ANTI-STATIC.

THIS DRAWING CONTAINS INFORMATION THAT IS PROPRIETARY TO MOLEX ELECTRONIC TECHNOLOGIES, LLC AND SHOULD NOT BE USED WITHOUT WRITTEN PERMISSION

| | | |
|---|---|---|
| EC NO: 168769 | DRWN: GGUNAGI | 2017/11/23 |
| CHK'D: KHLIM | APPR: KHLIM | 2018/06/19 |
| MIGRATED TO NX | | 2018/06/19 |

C2 REV

GENERAL TOLERANCES (UNLESS SPECIFIED)

| | MM | INCH |
|---|---|---|
| 4 PLACES | ± | ± |
| 3 PLACES | ± | ± |
| 2 PLACES | ± 0.2 | ± |
| 1 PLACES | ± | ± |
| 0 PLACES | ± | ± |

ANGULAR TOL ± 3.0

DRAFT WHERE APPLICABLE MUST REMAIN WITHIN DIMENSIONS

| DIMENSION UNITS | SCALE |
|---|---|
| MM | NTS |
| DRWN BY: SKLIM01 | DATE: 2006/05/25 |
| CHK'D BY: PATEY | DATE: 2006/07/05 |
| APPR BY: PATEY | DATE: 2006/07/05 |
| DRAWING SIZE: A3 | THIRD ANGLE PROJECTION |

molex®

CUSTOM HEADER
C-GRID HDR, SMT W/CAP WITH/WITHOUT LOC. PEGS

PRODUCT CUSTOMER DRAWING

| SERIES | MATERIAL NUMBER | CUSTOMER |
|---|---|---|
| 87920 | SEE TABLE | GENERAL MARKET |

| DOCUMENT NUMBER | DOC TYPE | DOC PART | SHEET NUMBER |
|---|---|---|---|
| SD-87920-001 | PSD | 001 | 4 OF 14 |

| RELEASE STATUS | P1 | RELEASE DATE | 2018/06/19 16:18:34 |
|---|---|---|---|

FORMAT: Met-lega-master-tb-prod-A3
REVISION: C
DATE: 2017/02/06

| CKT | Ao | Bo | F | Ko | P1 | W |
|---|---|---|---|---|---|---|
| 08 | 7.40 | 10.70 | 11.50 | 10.80 | 12.00 | 24.00 |
| 10 | 7.40 | 13.25 | 11.50 | 10.80 | 12.00 | 24.00 |

THIS TYPE OF CARRIER TAPE IS FOR CKT SIZE 08 AND 10

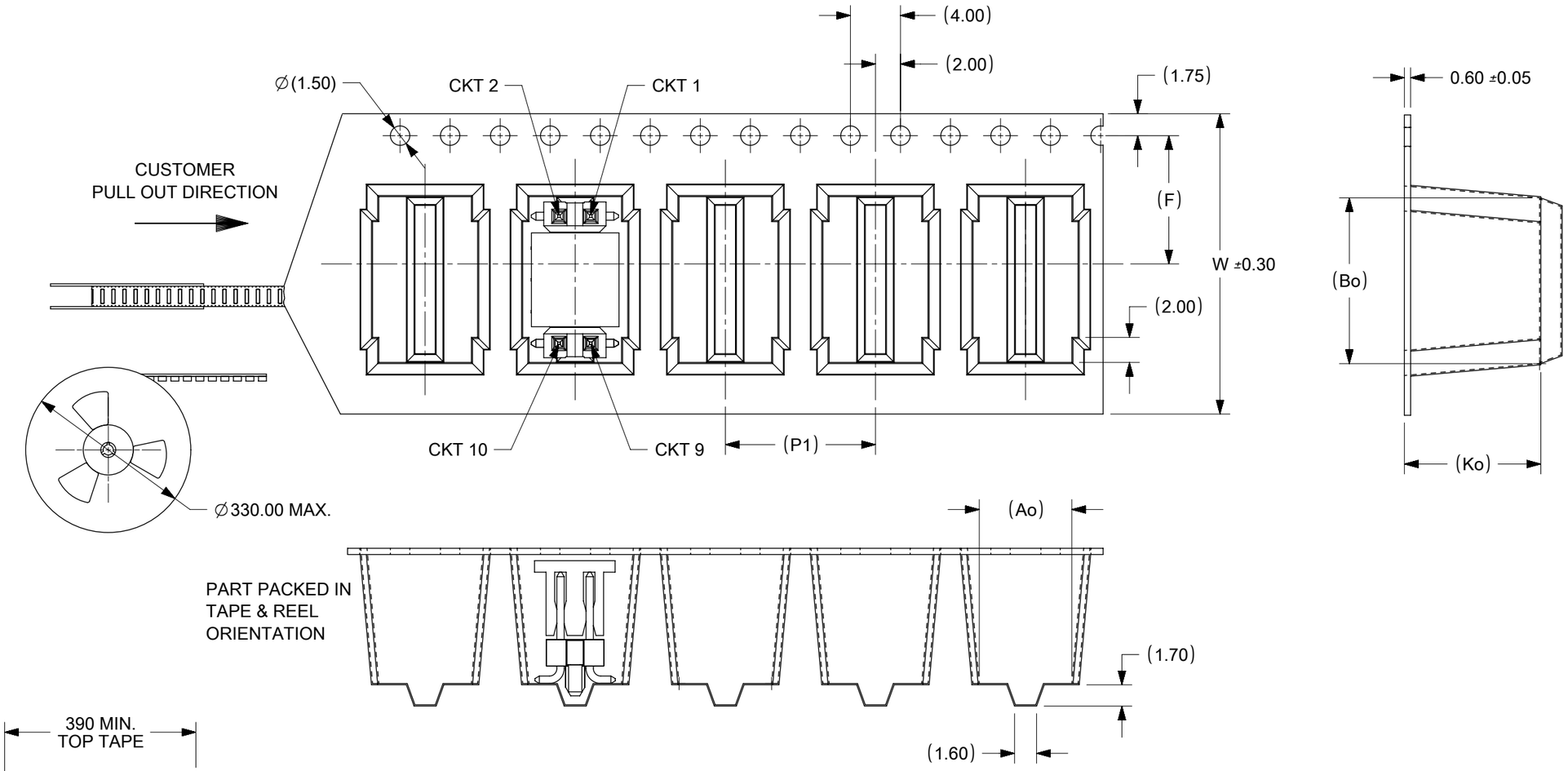


NOTES:

1. LEADER AND TRAILER TAPE

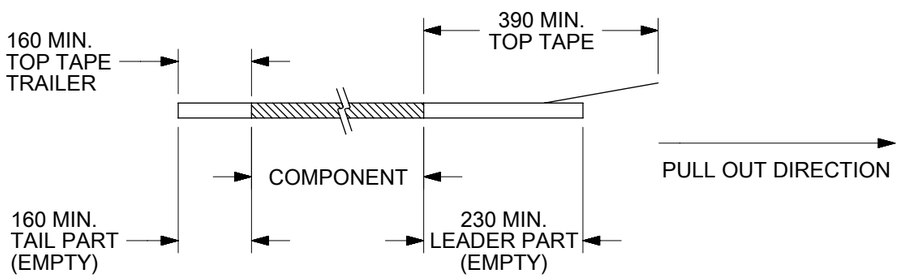


2. PEELING OFF FORCE OF THE TOP TAPE: 20-80gf.
   (PEELING DIRECTION AS SHOWN IN FOLLOWING FIGURE)

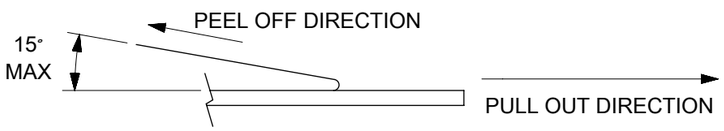


3. PACKAGING STANDARD IS AS PER EIA-481.
4. TAPE & REEL QUANTITY = 440PCS/REEL
5. THE TAPE IS TREATED FOR ANTI-STATIC.
6. FOR ILLUSTRATION PURPOSE, 10CKT IS SHOWN.

THIS DRAWING CONTAINS INFORMATION THAT IS PROPRIETARY TO MOLEX ELECTRONIC TECHNOLOGIES, LLC AND SHOULD NOT BE USED WITHOUT WRITTEN PERMISSION

MIGRATED TO NX
EC NO: 168769 2017/11/23
DRWN: GGUNAGI 2018/06/19
CHK'D: KHLIM 2018/06/19
APPR: KHLIM

GENERAL TOLERANCES (UNLESS SPECIFIED)

| | MM | INCH |
|---|---|---|
| 4 PLACES | ± | ± |
| 3 PLACES | ± | ± |
| 2 PLACES | ± 0.2 | ± |
| 1 PLACES | ± | ± |
| 0 PLACES | ± | ± |

ANGULAR TOL ± 3.0

DRAFT WHERE APPLICABLE MUST REMAIN WITHIN DIMENSIONS

C2 REV

DIMENSION UNITS: MM
SCALE: NTS
DRWN BY: SKLIM01 DATE: 2006/05/25
CHK'D BY: PATEY DATE: 2006/07/05
APPR BY: PATEY DATE: 2006/07/05
DRAWING SIZE: A3
THIRD ANGLE PROJECTION

molex®

CUSTOM HEADER
C-GRID HDR, SMT W/CAP WITH/WITHOUT LOC. PEGS

PRODUCT CUSTOMER DRAWING

| SERIES | MATERIAL NUMBER | CUSTOMER |
|---|---|---|
| 87920 | SEE TABLE | GENERAL MARKET |

| DOCUMENT NUMBER | DOC TYPE | DOC PART | SHEET NUMBER |
|---|---|---|---|
| SD-87920-001 | PSD | 001 | 5 OF 14 |

| RELEASE STATUS | P1 | RELEASE DATE | 2018/06/19 16:18:34 |
|---|---|---|---|

FORMAT: Met-lega-master-tb-prod-A3
REVISION: C
DATE: 2017/02/06

| CKT | Ao | Bo | F | Ko | P1 | So | W | C |
|---|---|---|---|---|---|---|---|---|
| 14 | 7.40 | 18.33 | 14.20 | 10.80 | 12.00 | 28.40 | 32.00 | 3.00 |
| 16 | 7.40 | 20.90 | 14.20 | 10.80 | 12.00 | 28.40 | 32.00 | 3.00 |
| 20 | 7.40 | 25.95 | 20.20 | 10.80 | 12.00 | 40.40 | 44.00 | 5.00 |

THIS TYPE OF CARRIER TAPE IS FOR CKT SIZE 14, 16 AND 20

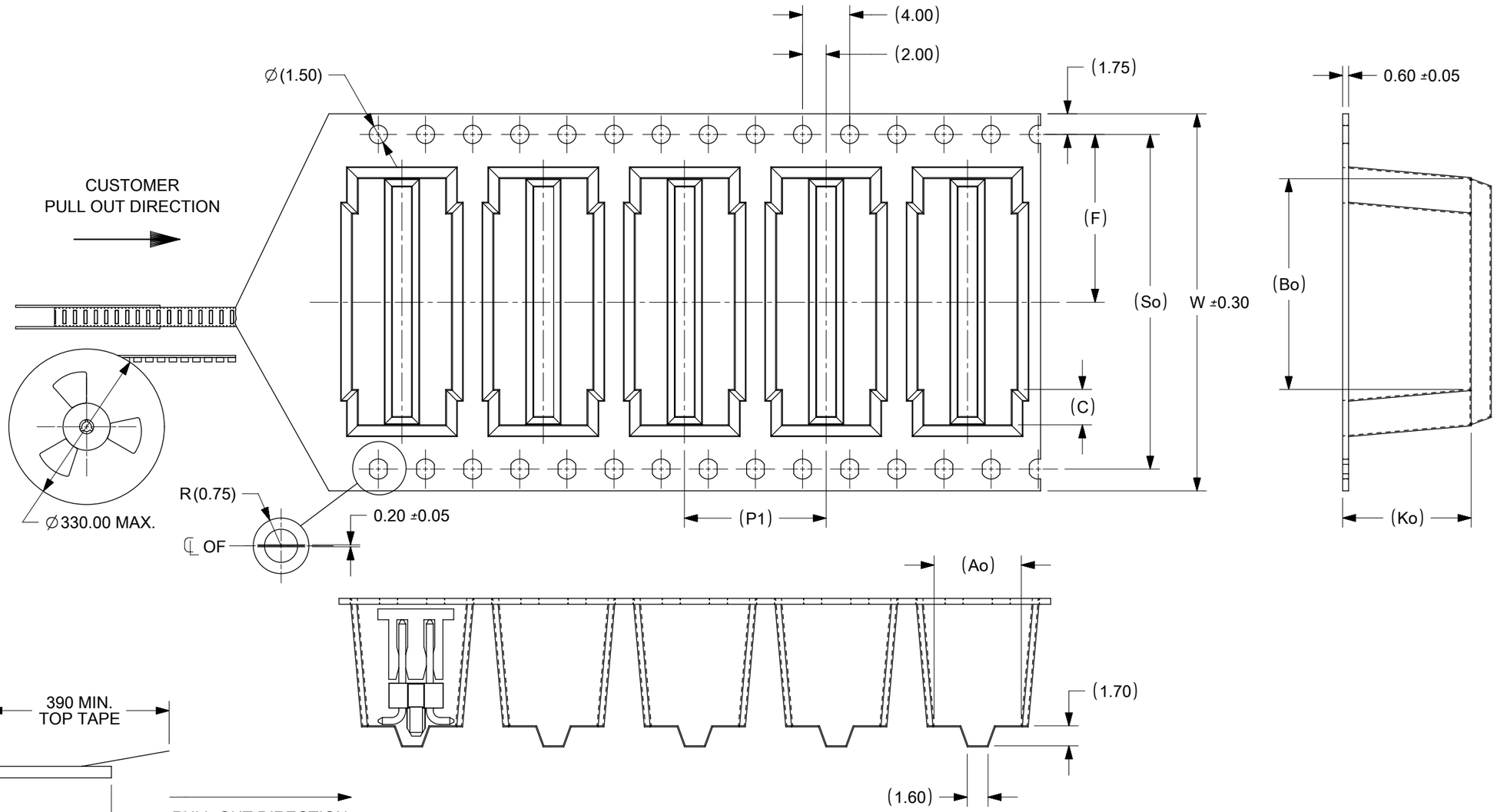


NOTES:

1. LEADER AND TRAILER TAPE

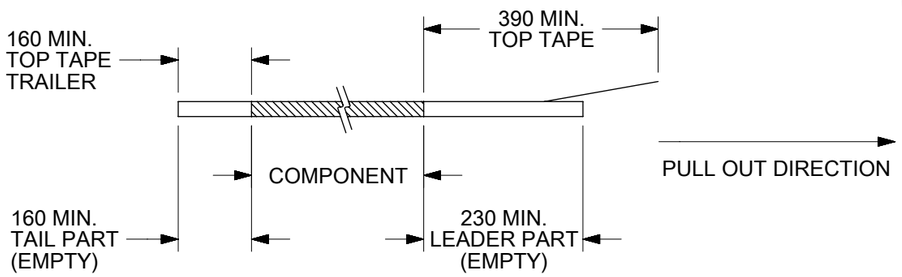


2. PEELING OFF FORCE OF THE TOP TAPE: 20-80gf.
   (PEELING DIRECTION AS SHOWN IN FOLLOWING FIGURE)

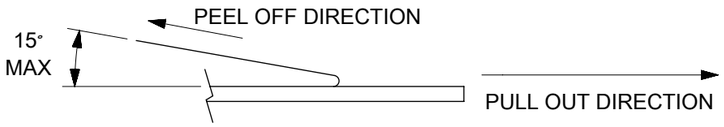


3. PACKAGING STANDARD IS AS PER EIA-481.
4. TAPE & REEL QUANTITY = 440PCS/REEL
5. THE TAPE IS TREATED FOR ANTI-STATIC.

THIS DRAWING CONTAINS INFORMATION THAT IS PROPRIETARY TO MOLEX ELECTRONIC TECHNOLOGIES, LLC AND SHOULD NOT BE USED WITHOUT WRITTEN PERMISSION

MIGRATED TO NX
EC NO: 168769 2017/11/23
DRWN: GGUNAGI 2018/06/19
CHK'D: KHLIM 2018/06/19
APPR: KHLIM

GENERAL TOLERANCES (UNLESS SPECIFIED)

| | MM | INCH |
|---|---|---|
| 4 PLACES | ± | ± |
| 3 PLACES | ± | ± |
| 2 PLACES | ± 0.2 | ± |
| 1 PLACES | ± | ± |
| 0 PLACES | ± | ± |

ANGULAR TOL ± 3.0

DRAFT WHERE APPLICABLE MUST REMAIN WITHIN DIMENSIONS

C2 REV

DIMENSION UNITS: MM
SCALE: NTS
DRWN BY: SKLIM01 DATE: 2006/05/25
CHK'D BY: PATEY DATE: 2006/07/05
APPR BY: PATEY DATE: 2006/07/05
DRAWING SIZE: A3
THIRD ANGLE PROJECTION

molex®

CUSTOM HEADER
C-GRID HDR, SMT W/CAP WITH/WITHOUT LOC. PEGS

PRODUCT CUSTOMER DRAWING

| SERIES | MATERIAL NUMBER | CUSTOMER |
|---|---|---|
| 87920 | SEE TABLE | GENERAL MARKET |

| DOCUMENT NUMBER | DOC TYPE | DOC PART | SHEET NUMBER |
|---|---|---|---|
| SD-87920-001 | PSD | 001 | 6 OF 14 |

| RELEASE STATUS | P1 | RELEASE DATE | 2018/06/19 16:18:34 |
|---|---|---|---|

FORMAT: Met-lega-master-tb-prod-A3
REVISION: C
DATE: 2017/02/06

| CKT | Ao | Bo | F | kO | P1 | So | W |
|---|---|---|---|---|---|---|---|
| 40 | 7.60 | 51.60 | 34.20 | 11.30 | 16.00 | 68.50 | 72.00 |

THIS TYPE OF CARRIER TAPE IS FOR CKT SIZE 40 ONLY

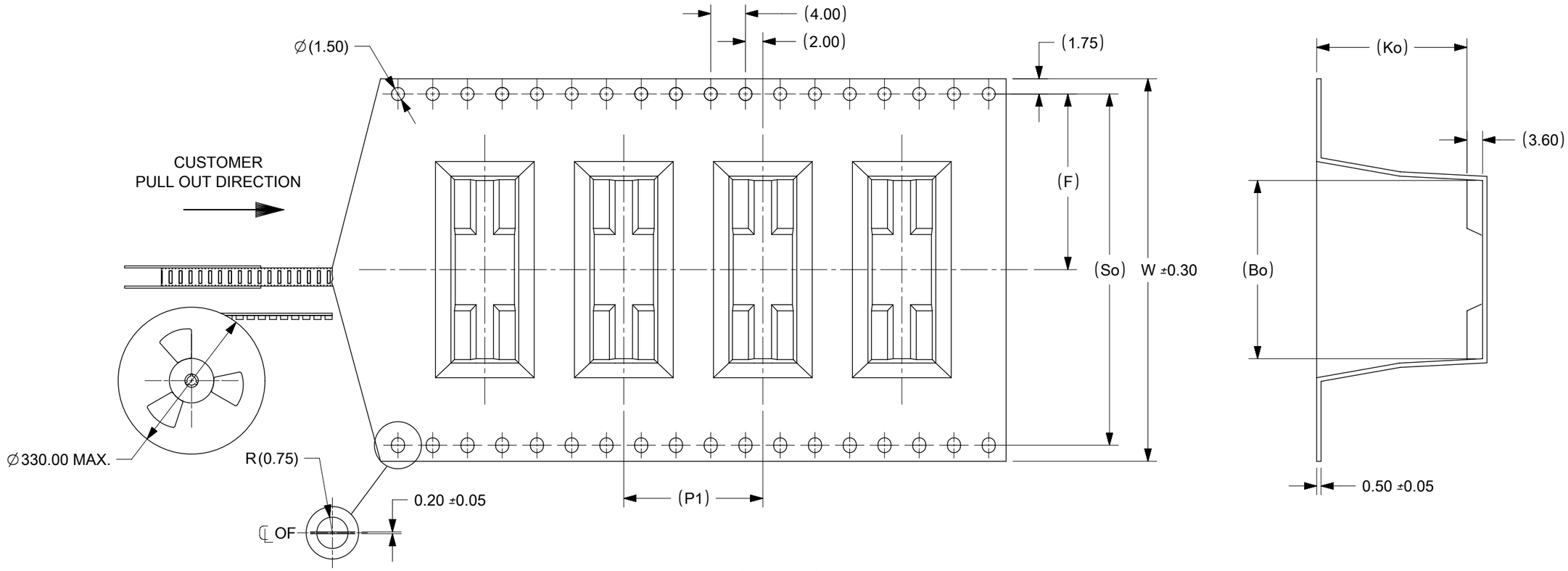


NOTES:

1. LEADER AND TRAILER TAPE

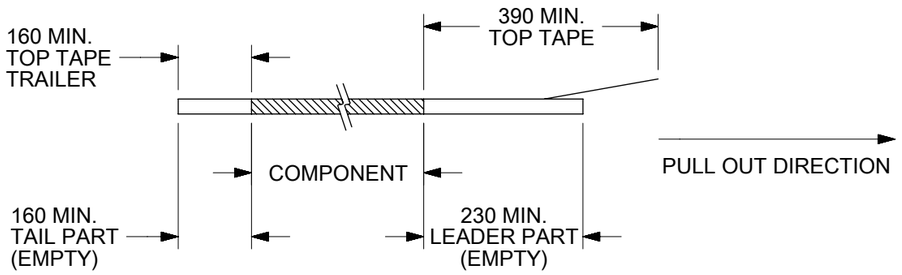


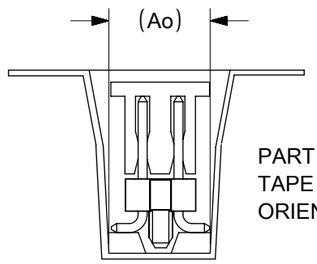


PART PACKED IN
TAPE & REEL
ORIENTATION

2. PEELING OFF FORCE OF THE TOP TAPE: 20-80gf.
   (PEELING DIRECTION AS SHOWN IN FOLLOWING FIGURE)

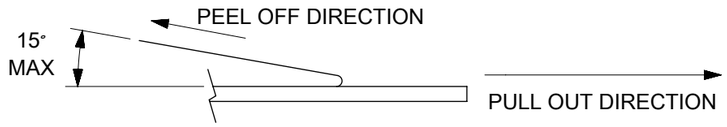


3. PACKAGING STANDARD IS AS PER EIA-481.
4. TAPE & REEL QUANTITY = 250PCS/REEL
5. THE TAPE IS TREATED FOR ANTI-STATIC.

THIS DRAWING CONTAINS INFORMATION THAT IS PROPRIETARY TO MOLEX ELECTRONIC TECHNOLOGIES, LLC AND SHOULD NOT BE USED WITHOUT WRITTEN PERMISSION

MIGRATED TO NX
EC NO: 168769 2017/11/23
DRWN: GGUNAGI 2018/06/19
CHK'D: KHLIM 2018/06/19
APPR: KHLIM

| GENERAL TOLERANCES (UNLESS SPECIFIED) | MM | INCH |
|---|---|---|
| 4 PLACES | ± | ± |
| 3 PLACES | ± | ± |
| 2 PLACES | ± 0.2 | ± |
| 1 PLACES | ± | ± |
| 0 PLACES | ± | ± |
| ANGULAR TOL ± 3.0 | | |

DRAFT WHERE APPLICABLE MUST REMAIN WITHIN DIMENSIONS

REV C2

DIMENSION UNITS: MM
SCALE: NTS
DRWN BY: SKLIM01 DATE: 2006/05/25
CHK'D BY: PATEY DATE: 2006/07/05
APPR BY: PATEY DATE: 2006/07/05
DRAWING SIZE: A3
THIRD ANGLE PROJECTION

molex®

CUSTOM HEADER
C-GRID HDR, SMT W/CAP WITH/WITHOUT LOC. PEGS

PRODUCT CUSTOMER DRAWING

| SERIES | MATERIAL NUMBER | CUSTOMER |
|---|---|---|
| 87920 | SEE TABLE | GENERAL MARKET |

| DOCUMENT NUMBER | DOC TYPE | DOC PART | SHEET NUMBER |
|---|---|---|---|
| SD-87920-001 | PSD | 001 | 7 OF 14 |

| RELEASE STATUS | P1 | RELEASE DATE | 2018/06/19 16:18:34 |
|---|---|---|---|

FORMAT: Met-lega-master-tb-prod-A3
REVISION: C
DATE: 2017/02/06

| PART NUMBER IN PACKAGING OPTION | | CKT SIZE | PEG | PLATE OPT. | DIMENSION | | | | | |
|---|---|---|---|---|---|---|---|---|---|---|
| TAPE & REEL WITH CAP | TRAY W/O CAP | | | | A | B | C | M | F | G |
| 87920-0401 | 87920-0411 | 4 | N | 1 | 5.08 | 2.54 | --- | 5.84 | 9.65 | 10.66 |
| 87920-0402 | 87920-0412 | 4 | N | 2 | 5.08 | 2.54 | --- | 5.84 | 9.65 | 10.66 |
| 87920-0403 | 87920-0413 | 4 | N | 3 | 5.08 | 2.54 | --- | 5.84 | 9.65 | 10.66 |
| 87920-0431 | 87920-0441 | 4 | N | 1 | 5.08 | 2.54 | | 3.05 | 6.86 | 10.31 |
| 87920-0432 | 87920-0442 | 4 | N | 2 | 5.08 | 2.54 | --- | 3.05 | 6.86 | 10.31 |
| 87920-0433 | 87920-0443 | 4 | N | 3 | 5.08 | 2.54 | --- | 3.05 | 6.86 | 10.31 |
| | | | | | | | | | | |
| 87920-0601 | 87920-0611 | 6 | N | 1 | 7.62 | 5.08 | --- | 5.84 | 9.65 | 10.66 |
| 87920-0602 | 87920-0612 | 6 | N | 2 | 7.62 | 5.08 | --- | 5.84 | 9.65 | 10.66 |
| 87920-0603 | 87920-0613 | 6 | N | 3 | 7.62 | 5.08 | --- | 5.84 | 9.65 | 10.66 |
| 87920-0631 | 87920-0614 | 6 | N | 1 | 7.62 | 5.08 | | 3.05 | 6.86 | 10.31 |
| 87920-0632 | 87920-0615 | 6 | N | 2 | 7.62 | 5.08 | --- | 3.05 | 6.86 | 10.31 |
| 87920-0633 | 87920-0616 | 6 | N | 3 | 7.62 | 5.08 | --- | 3.05 | 6.86 | 10.31 |

THIS DRAWING CONTAINS INFORMATION THAT IS PROPRIETARY TO MOLEX ELECTRONIC TECHNOLOGIES, LLC AND SHOULD NOT BE USED WITHOUT WRITTEN PERMISSION

MIGRATED TO NX
EC NO: 168769 2017/11/23
DRWN: GGUNAGI 2018/06/19
CHK'D: KHLIM 2018/06/19
APPR: KHLIM

REV: C2

GENERAL TOLERANCES (UNLESS SPECIFIED)

| | MM | INCH |
|---|---|---|
| 4 PLACES | ± | ± |
| 3 PLACES | ± | ± |
| 2 PLACES | ± 0.2 | ± |
| 1 PLACES | ± | ± |
| 0 PLACES | ± | ± |

ANGULAR TOL ± 3.0

DRAFT WHERE APPLICABLE MUST REMAIN WITHIN DIMENSIONS

DIMENSION UNITS: MM
SCALE: NTS
DRWN BY: SKLIM01 DATE: 2006/05/25
CHK'D BY: PATEY DATE: 2006/07/05
APPR BY: PATEY DATE: 2006/07/05
DRAWING SIZE: A3
THIRD ANGLE PROJECTION

molex®

CUSTOM HEADER
C-GRID HDR, SMT W/CAP WITH/WITHOUT LOC. PEGS

PRODUCT CUSTOMER DRAWING

| SERIES | MATERIAL NUMBER | CUSTOMER |
|---|---|---|
| 87920 | SEE TABLE | GENERAL MARKET |

| DOCUMENT NUMBER | DOC TYPE | DOC PART | SHEET NUMBER |
|---|---|---|---|
| SD-87920-001 | PSD | 001 | 8 OF 14 |

| RELEASE STATUS | P1 | RELEASE DATE | 2018/06/19 16:18:34 |
|---|---|---|---|

FORMAT: Met-lega-master-tb-prod-A3
REVISION: C
DATE: 2017/02/06

| PART NUMBER IN PACKAGING OPTION | | | CKT SIZE | VOID | PEG | PLATE OPT. | DIMENSION | | | | | |
|---|---|---|---|---|---|---|---|---|---|---|---|---|
| TAPE & REEL WITH CAP | TUBE WITHOUT CAP | TUBE WITH CAP | | | | | A | B | C | M | F | G |
| 87920-0801 | 87920-0811 | 87920-0821 | 8 | --- | N | 1 | 10.16 | 7.62 | --- | 5.84 | 9.65 | 10.66 |
| 87920-0802 | 87920-0812 | 87920-0822 | 8 | --- | N | 2 | 10.16 | 7.62 | --- | 5.84 | 9.65 | 10.66 |
| 87920-0803 | 87920-0813 | 87920-0823 | 8 | --- | N | 3 | 10.16 | 7.62 | --- | 5.84 | 9.65 | 10.66 |
| 87920-0804 | 87920-0814 | 87920-0824 | 8 | --- | Y | 1 | 10.16 | 7.62 | 5.08 | 5.84 | 9.65 | 10.66 |
| 87920-0805 | 87920-0815 | 87920-0825 | 8 | --- | Y | 2 | 10.16 | 7.62 | 5.08 | 5.84 | 9.65 | 10.66 |
| 87920-0806 | 87920-0816 | 87920-0826 | 8 | --- | Y | 3 | 10.16 | 7.62 | 5.08 | 5.84 | 9.65 | 10.66 |
| 87920-9801 | 87920-9802 | 87920-9803 | 8 | 1.6 | N | 1 | 10.16 | 7.62 | --- | 5.84 | 9.65 | 10.66 |
| | | | | | | | | | | | | |
| 87920-1001 | 87920-1011 | 87920-1021 | 10 | --- | N | 1 | 12.70 | 10.16 | --- | 5.84 | 9.65 | 10.66 |
| 87920-1002 | 87920-1012 | 87920-1022 | 10 | --- | N | 2 | 12.70 | 10.16 | --- | 5.84 | 9.65 | 10.66 |
| 87920-1003 | 87920-1013 | 87920-1023 | 10 | --- | N | 3 | 12.70 | 10.16 | --- | 5.84 | 9.65 | 10.66 |
| 87920-1004 | 87920-1014 | 87920-1024 | 10 | --- | Y | 1 | 12.70 | 10.16 | 7.62 | 5.84 | 9.65 | 10.66 |
| 87920-1005 | 87920-1015 | 87920-1025 | 10 | --- | Y | 2 | 12.70 | 10.16 | 7.62 | 5.84 | 9.65 | 10.66 |
| 87920-1006 | 87920-1016 | 87920-1026 | 10 | --- | Y | 3 | 12.70 | 10.16 | 7.62 | 5.84 | 9.65 | 10.66 |
| | | | | | | | | | | | | |
| ------ | 87920-1211 | 87920-1221 | 12 | --- | N | 1 | 15.24 | 12.70 | --- | 5.84 | 9.65 | 10.66 |
| ------ | 87920-1212 | 87920-1222 | 12 | --- | N | 2 | 15.24 | 12.70 | --- | 5.84 | 9.65 | 10.66 |
| ------ | 87920-1213 | 87920-1223 | 12 | --- | N | 3 | 15.24 | 12.70 | --- | 5.84 | 9.65 | 10.66 |
| ------ | 87920-1214 | 87920-1224 | 12 | --- | Y | 1 | 15.24 | 12.70 | 10.16 | 5.84 | 9.65 | 10.66 |
| ------ | 87920-1215 | 87920-1225 | 12 | --- | Y | 2 | 15.24 | 12.70 | 10.16 | 5.84 | 9.65 | 10.66 |
| ------ | 87920-1216 | 87920-1226 | 12 | --- | Y | 3 | 15.24 | 12.70 | 10.16 | 5.84 | 9.65 | 10.66 |

| PART NUMBER IN PACKAGING OPTION | | | CKT SIZE | PEG | PLATE OPT. | DIMENSION | | | | | |
|---|---|---|---|---|---|---|---|---|---|---|---|
| TAPE & REEL WITH CAP | TUBE WITHOUT CAP | TUBE WITH CAP | | | | A | B | C | M | F | G |
| 87920-0831 | 87920-0841 | 87920-0851 | 8 | N | 1 | 10.16 | 7.62 | --- | 3.05 | 6.86 | 10.31 |
| 87920-0832 | 87920-0842 | 87920-0852 | 8 | N | 2 | 10.16 | 7.62 | --- | 3.05 | 6.86 | 10.31 |
| 87920-0833 | 87920-0843 | 87920-0853 | 8 | N | 3 | 10.16 | 7.62 | --- | 3.05 | 6.86 | 10.31 |
| 87920-0834 | 87920-0844 | 87920-0854 | 8 | Y | 1 | 10.16 | 7.62 | 5.08 | 3.05 | 6.86 | 10.31 |
| 87920-0835 | 87920-0845 | 87920-0855 | 8 | Y | 2 | 10.16 | 7.62 | 5.08 | 3.05 | 6.86 | 10.31 |
| 87920-0836 | 87920-0846 | 87920-0856 | 8 | Y | 3 | 10.16 | 7.62 | 5.08 | 3.05 | 6.86 | 10.31 |
| | | | | | | | | | | | |
| 87920-1031 | 87920-1041 | 87920-1051 | 10 | N | 1 | 12.70 | 10.16 | --- | 3.05 | 6.86 | 10.31 |
| 87920-1032 | 87920-1042 | 87920-1052 | 10 | N | 2 | 12.70 | 10.16 | --- | 3.05 | 6.86 | 10.31 |
| 87920-1033 | 87920-1043 | 87920-1053 | 10 | N | 3 | 12.70 | 10.16 | --- | 3.05 | 6.86 | 10.31 |
| 87920-1034 | 87920-1044 | 87920-1054 | 10 | Y | 1 | 12.70 | 10.16 | 7.62 | 3.05 | 6.86 | 10.31 |
| 87920-1035 | 87920-1045 | 87920-1055 | 10 | Y | 2 | 12.70 | 10.16 | 7.62 | 3.05 | 6.86 | 10.31 |
| 87920-1036 | 87920-1046 | 87920-1056 | 10 | Y | 3 | 12.70 | 10.16 | 7.62 | 3.05 | 6.86 | 10.31 |
| | | | | | | | | | | | |
| ------ | 87920-1241 | 87920-1251 | 12 | N | 1 | 15.24 | 12.70 | --- | 3.05 | 6.86 | 10.31 |
| ------ | 87920-1242 | 87920-1252 | 12 | N | 2 | 15.24 | 12.70 | --- | 3.05 | 6.86 | 10.31 |
| ------ | 87920-1243 | 87920-1253 | 12 | N | 3 | 15.24 | 12.70 | --- | 3.05 | 6.86 | 10.31 |
| ------ | 87920-1244 | 87920-1254 | 12 | Y | 1 | 15.24 | 12.70 | 10.16 | 3.05 | 6.86 | 10.31 |
| ------ | 87920-1245 | 87920-1255 | 12 | Y | 2 | 15.24 | 12.70 | 10.16 | 3.05 | 6.86 | 10.31 |
| ------ | 87920-1246 | 87920-1256 | 12 | Y | 3 | 15.24 | 12.70 | 10.16 | 3.05 | 6.86 | 10.31 |

THIS DRAWING CONTAINS INFORMATION THAT IS PROPRIETARY TO MOLEX ELECTRONIC TECHNOLOGIES, LLC AND SHOULD NOT BE USED WITHOUT WRITTEN PERMISSION

MIGRATED TO NX
EC NO: 168769 2017/11/23
DRWN: GGUNAGI 2018/06/19
CHK'D: KHLIM 2018/06/19
APPR: KHLIM

GENERAL TOLERANCES (UNLESS SPECIFIED)

| | MM | INCH |
|---|---|---|
| 4 PLACES | ± | ± |
| 3 PLACES | ± | ± |
| 2 PLACES | ± 0.2 | ± |
| 1 PLACES | ± | ± |
| 0 PLACES | ± | ± |

ANGULAR TOL ± 3.0

DRAFT WHERE APPLICABLE MUST REMAIN WITHIN DIMENSIONS

REV C2

DIMENSION UNITS: MM
SCALE: NTS
DRWN BY: SKLIM01 DATE: 2006/05/25
CHK'D BY: PATEY DATE: 2006/07/05
APPR BY: PATEY DATE: 2006/07/05
DRAWING SIZE: A3
THIRD ANGLE PROJECTION

molex®

CUSTOM HEADER
C-GRID HDR, SMT W/CAP WITH/WITHOUT LOC. PEGS

PRODUCT CUSTOMER DRAWING

| SERIES | MATERIAL NUMBER | CUSTOMER |
|---|---|---|
| 87920 | SEE TABLE | GENERAL MARKET |

| DOCUMENT NUMBER | DOC TYPE | DOC PART | SHEET NUMBER |
|---|---|---|---|
| SD-87920-001 | PSD | 001 | 9 OF 14 |

| RELEASE STATUS | P1 | RELEASE DATE | 2018/06/19 16:18:34 |
|---|---|---|---|

FORMAT: Met-lega-master-tb-prod-A3
REVISION: C
DATE: 2017/02/06

| PART NUMBER IN PACKAGING OPTION | | | CKT SIZE | PEG | PLATE OPT. | DIMENSION | | | | | |
|---|---|---|---|---|---|---|---|---|---|---|---|
| TAPE & REEL WITH CAP | TUBE WITHOUT CAP | TUBE WITH CAP | | | | A | B | C | M | F | G |
| 87920-1401 | 87920-1411 | 87920-1421 | 14 | N | 1 | 17.78 | 15.24 | --- | 5.84 | 9.65 | 10.66 |
| 87920-1402 | 87920-1412 | 87920-1422 | 14 | N | 2 | 17.78 | 15.24 | --- | 5.84 | 9.65 | 10.66 |
| 87920-1403 | 87920-1413 | 87920-1423 | 14 | N | 3 | 17.78 | 15.24 | --- | 5.84 | 9.65 | 10.66 |
| 87920-1404 | 87920-1414 | 87920-1424 | 14 | Y | 1 | 17.78 | 15.24 | 12.70 | 5.84 | 9.65 | 10.66 |
| 87920-1405 | 87920-1415 | 87920-1425 | 14 | Y | 2 | 17.78 | 15.24 | 12.70 | 5.84 | 9.65 | 10.66 |
| 87920-1406 | 87920-1416 | 87920-1426 | 14 | Y | 3 | 17.78 | 15.24 | 12.70 | 5.84 | 9.65 | 10.66 |
| | | | | | | | | | | | |
| 87920-1601 | 87920-1611 | 87920-1621 | 16 | N | 1 | 20.32 | 17.78 | --- | 5.84 | 9.65 | 10.66 |
| 87920-1602 | 87920-1612 | 87920-1622 | 16 | N | 2 | 20.32 | 17.78 | --- | 5.84 | 9.65 | 10.66 |
| 87920-1603 | 87920-1613 | 87920-1623 | 16 | N | 3 | 20.32 | 17.78 | --- | 5.84 | 9.65 | 10.66 |
| 87920-1604 | 87920-1614 | 87920-1624 | 16 | Y | 1 | 20.32 | 17.78 | 15.24 | 5.84 | 9.65 | 10.66 |
| 87920-1605 | 87920-1615 | 87920-1625 | 16 | Y | 2 | 20.32 | 17.78 | 15.24 | 5.84 | 9.65 | 10.66 |
| 87920-1606 | 87920-1616 | 87920-1626 | 16 | Y | 3 | 20.32 | 17.78 | 15.24 | 5.84 | 9.65 | 10.66 |
| | | | | | | | | | | | |
| ------ | 87920-1811 | 87920-1821 | 18 | N | 1 | 22.86 | 20.32 | --- | 5.84 | 9.65 | 10.66 |
| ------ | 87920-1812 | 87920-1822 | 18 | N | 2 | 22.86 | 20.32 | --- | 5.84 | 9.65 | 10.66 |
| ------ | 87920-1813 | 87920-1823 | 18 | N | 3 | 22.86 | 20.32 | --- | 5.84 | 9.65 | 10.66 |
| ------ | 87920-1814 | 87920-1824 | 18 | Y | 1 | 22.86 | 20.32 | 17.78 | 5.84 | 9.65 | 10.66 |
| ------ | 87920-1815 | 87920-1825 | 18 | Y | 2 | 22.86 | 20.32 | 17.78 | 5.84 | 9.65 | 10.66 |
| ------ | 87920-1816 | 87920-1826 | 18 | Y | 3 | 22.86 | 20.32 | 17.78 | 5.84 | 9.65 | 10.66 |

| PART NUMBER IN PACKAGING OPTION | | | CKT SIZE | PEG | PLATE OPT. | DIMENSION | | | | | |
|---|---|---|---|---|---|---|---|---|---|---|---|
| TAPE & REEL WITH CAP | TUBE WITHOUT CAP | TUBE WITH CAP | | | | A | B | C | M | F | G |
| 87920-1431 | 87920-1441 | 87920-1451 | 14 | N | 1 | 17.78 | 15.24 | --- | 3.05 | 6.86 | 10.31 |
| 87920-1432 | 87920-1442 | 87920-1452 | 14 | N | 2 | 17.78 | 15.24 | --- | 3.05 | 6.86 | 10.31 |
| 87920-1433 | 87920-1443 | 87920-1453 | 14 | N | 3 | 17.78 | 15.24 | --- | 3.05 | 6.86 | 10.31 |
| 87920-1434 | 87920-1444 | 87920-1454 | 14 | Y | 1 | 17.78 | 15.24 | 12.70 | 3.05 | 6.86 | 10.31 |
| 87920-1435 | 87920-1445 | 87920-1455 | 14 | Y | 2 | 17.78 | 15.24 | 12.70 | 3.05 | 6.86 | 10.31 |
| 87920-1436 | 87920-1446 | 87920-1456 | 14 | Y | 3 | 17.78 | 15.24 | 12.70 | 3.05 | 6.86 | 10.31 |
| | | | | | | | | | | | |
| 87920-1631 | 87920-1641 | 87920-1651 | 16 | N | 1 | 20.32 | 17.78 | --- | 3.05 | 6.86 | 10.31 |
| 87920-1632 | 87920-1642 | 87920-1652 | 16 | N | 2 | 20.32 | 17.78 | --- | 3.05 | 6.86 | 10.31 |
| 87920-1633 | 87920-1643 | 87920-1653 | 16 | N | 3 | 20.32 | 17.78 | --- | 3.05 | 6.86 | 10.31 |
| 87920-1634 | 87920-1644 | 87920-1654 | 16 | Y | 1 | 20.32 | 17.78 | 15.24 | 3.05 | 6.86 | 10.31 |
| 87920-1635 | 87920-1645 | 87920-1655 | 16 | Y | 2 | 20.32 | 17.78 | 15.24 | 3.05 | 6.86 | 10.31 |
| 87920-1636 | 87920-1646 | 87920-1656 | 16 | Y | 3 | 20.32 | 17.78 | 15.24 | 3.05 | 6.86 | 10.31 |
| | | | | | | | | | | | |
| ------ | 87920-1841 | 87920-1851 | 18 | N | 1 | 22.86 | 20.32 | --- | 3.05 | 6.86 | 10.31 |
| ------ | 87920-1842 | 87920-1852 | 18 | N | 2 | 22.86 | 20.32 | --- | 3.05 | 6.86 | 10.31 |
| ------ | 87920-1843 | 87920-1853 | 18 | N | 3 | 22.86 | 20.32 | --- | 3.05 | 6.86 | 10.31 |
| ------ | 87920-1844 | 87920-1854 | 18 | Y | 1 | 22.86 | 20.32 | 17.78 | 3.05 | 6.86 | 10.31 |
| ------ | 87920-1845 | 87920-1855 | 18 | Y | 2 | 22.86 | 20.32 | 17.78 | 3.05 | 6.86 | 10.31 |
| ------ | 87920-1846 | 87920-1856 | 18 | Y | 3 | 22.86 | 20.32 | 17.78 | 3.05 | 6.86 | 10.31 |

THIS DRAWING CONTAINS INFORMATION THAT IS PROPRIETARY TO MOLEX ELECTRONIC TECHNOLOGIES, LLC AND SHOULD NOT BE USED WITHOUT WRITTEN PERMISSION

MIGRATED TO NX
EC NO: 168769 2017/11/23
DRWN: GGUNAGI 2018/06/19
CHK'D: KHLIM 2018/06/19
APPR: KHLIM

REV: C2

GENERAL TOLERANCES (UNLESS SPECIFIED)

| | MM | INCH |
|---|---|---|
| 4 PLACES | ± | ± |
| 3 PLACES | ± | ± |
| 2 PLACES | ± 0.2 | ± |
| 1 PLACES | ± | ± |
| 0 PLACES | ± | ± |

ANGULAR TOL ± 3.0

DRAFT WHERE APPLICABLE MUST REMAIN WITHIN DIMENSIONS

DIMENSION UNITS: MM
SCALE: NTS
DRWN BY: SKLIM01 DATE: 2006/05/25
CHK'D BY: PATEY DATE: 2006/07/05
APPR BY: PATEY DATE: 2006/07/05
DRAWING SIZE: A3
THIRD ANGLE PROJECTION

molex®

CUSTOM HEADER
C-GRID HDR, SMT W/CAP WITH/WITHOUT LOC. PEGS

PRODUCT CUSTOMER DRAWING

| SERIES | MATERIAL NUMBER | CUSTOMER |
|---|---|---|
| 87920 | SEE TABLE | GENERAL MARKET |

| DOCUMENT NUMBER | DOC TYPE | DOC PART | SHEET NUMBER |
|---|---|---|---|
| SD-87920-001 | PSD | 001 | 10 OF 14 |

| RELEASE STATUS | P1 | RELEASE DATE | 2018/06/19 16:18:34 |
|---|---|---|---|

FORMAT: Met-lega-master-tb-prod-A3
REVISION: C
DATE: 2017/02/06

| PART NUMBER IN PACKAGING OPTION | | | CKT SIZE | PEG | PLATE OPT. | DIMENSION | | | | | |
|---|---|---|---|---|---|---|---|---|---|---|---|
| TAPE & REEL WITH CAP | TUBE WITHOUT CAP | TUBE WITH CAP | | | | A | B | C | M | F | G |
| 87920-2001 | 87920-2011 | 87920-2021 | 20 | N | 1 | 25.40 | 22.86 | --- | 5.84 | 9.65 | 10.66 |
| 87920-2002 | 87920-2012 | 87920-2022 | 20 | N | 2 | 25.40 | 22.86 | --- | 5.84 | 9.65 | 10.66 |
| 87920-2003 | 87920-2013 | 87920-2023 | 20 | N | 3 | 25.40 | 22.86 | --- | 5.84 | 9.65 | 10.66 |
| 87920-2004 | 87920-2014 | 87920-2024 | 20 | Y | 1 | 25.40 | 22.86 | 20.32 | 5.84 | 9.65 | 10.66 |
| 87920-2005 | 87920-2015 | 87920-2025 | 20 | Y | 2 | 25.40 | 22.86 | 20.32 | 5.84 | 9.65 | 10.66 |
| 87920-2006 | 87920-2016 | 87920-2026 | 20 | Y | 3 | 25.40 | 22.86 | 20.32 | 5.84 | 9.65 | 10.66 |
| | | | | | | | | | | | |
| ------ | 87920-2211 | 87920-2221 | 22 | N | 1 | 27.94 | 25.40 | --- | 5.84 | 9.65 | 10.66 |
| ------ | 87920-2212 | 87920-2222 | 22 | N | 2 | 27.94 | 25.40 | --- | 5.84 | 9.65 | 10.66 |
| ------ | 87920-2213 | 87920-2223 | 22 | N | 3 | 27.94 | 25.40 | --- | 5.84 | 9.65 | 10.66 |
| ------ | 87920-2214 | 87920-2224 | 22 | Y | 1 | 27.94 | 25.40 | 22.86 | 5.84 | 9.65 | 10.66 |
| ------ | 87920-2215 | 87920-2225 | 22 | Y | 2 | 27.94 | 25.40 | 22.86 | 5.84 | 9.65 | 10.66 |
| ------ | 87920-2216 | 87920-2226 | 22 | Y | 3 | 27.94 | 25.40 | 22.86 | 5.84 | 9.65 | 10.66 |
| | | | | | | | | | | | |
| ------ | 87920-2411 | 87920-2421 | 24 | N | 1 | 30.48 | 27.94 | --- | 5.84 | 9.65 | 10.66 |
| ------ | 87920-2412 | 87920-2422 | 24 | N | 2 | 30.48 | 27.94 | --- | 5.84 | 9.65 | 10.66 |
| ------ | 87920-2413 | 87920-2423 | 24 | N | 3 | 30.48 | 27.94 | --- | 5.84 | 9.65 | 10.66 |
| ------ | 87920-2414 | 87920-2424 | 24 | Y | 1 | 30.48 | 27.94 | 25.40 | 5.84 | 9.65 | 10.66 |
| ------ | 87920-2415 | 87920-2425 | 24 | Y | 2 | 30.48 | 27.94 | 25.40 | 5.84 | 9.65 | 10.66 |
| ------ | 87920-2416 | 87920-2426 | 24 | Y | 3 | 30.48 | 27.94 | 25.40 | 5.84 | 9.65 | 10.66 |

| PART NUMBER IN PACKAGING OPTION | | | CKT SIZE | PEG | PLATE OPT. | DIMENSION | | | | | |
|---|---|---|---|---|---|---|---|---|---|---|---|
| TAPE & REEL WITH CAP | TUBE WITHOUT CAP | TUBE WITH CAP | | | | A | B | C | M | F | G |
| 87920-2031 | 87920-2041 | 87920-2051 | 20 | N | 1 | 25.40 | 22.86 | --- | 3.05 | 6.86 | 10.31 |
| 87920-2032 | 87920-2042 | 87920-2052 | 20 | N | 2 | 25.40 | 22.86 | --- | 3.05 | 6.86 | 10.31 |
| 87920-2033 | 87920-2043 | 87920-2053 | 20 | N | 3 | 25.40 | 22.86 | --- | 3.05 | 6.86 | 10.31 |
| 87920-2034 | 87920-2044 | 87920-2054 | 20 | Y | 1 | 25.40 | 22.86 | 20.32 | 3.05 | 6.86 | 10.31 |
| 87920-2035 | 87920-2045 | 87920-2055 | 20 | Y | 2 | 25.40 | 22.86 | 20.32 | 3.05 | 6.86 | 10.31 |
| 87920-2036 | 87920-2046 | 87920-2056 | 20 | Y | 3 | 25.40 | 22.86 | 20.32 | 3.05 | 6.86 | 10.31 |
| | | | | | | | | | | | |
| ------ | 87920-2241 | 87920-2251 | 22 | N | 1 | 27.94 | 25.40 | --- | 3.05 | 6.86 | 10.31 |
| ------ | 87920-2242 | 87920-2252 | 22 | N | 2 | 27.94 | 25.40 | --- | 3.05 | 6.86 | 10.31 |
| ------ | 87920-2243 | 87920-2253 | 22 | N | 3 | 27.94 | 25.40 | --- | 3.05 | 6.86 | 10.31 |
| ------ | 87920-2244 | 87920-2254 | 22 | Y | 1 | 27.94 | 25.40 | 22.86 | 3.05 | 6.86 | 10.31 |
| ------ | 87920-2245 | 87920-2255 | 22 | Y | 2 | 27.94 | 25.40 | 22.86 | 3.05 | 6.86 | 10.31 |
| ------ | 87920-2246 | 87920-2256 | 22 | Y | 3 | 27.94 | 25.40 | 22.86 | 3.05 | 6.86 | 10.31 |
| | | | | | | | | | | | |
| ------ | 87920-2441 | 87920-2451 | 24 | N | 1 | 30.48 | 27.94 | --- | 3.05 | 6.86 | 10.31 |
| ------ | 87920-2442 | 87920-2452 | 24 | N | 2 | 30.48 | 27.94 | --- | 3.05 | 6.86 | 10.31 |
| ------ | 87920-2443 | 87920-2453 | 24 | N | 3 | 30.48 | 27.94 | --- | 3.05 | 6.86 | 10.31 |
| ------ | 87920-2444 | 87920-2454 | 24 | Y | 1 | 30.48 | 27.94 | 25.40 | 3.05 | 6.86 | 10.31 |
| ------ | 87920-2445 | 87920-2455 | 24 | Y | 2 | 30.48 | 27.94 | 25.40 | 3.05 | 6.86 | 10.31 |
| ------ | 87920-2446 | 87920-2456 | 24 | Y | 3 | 30.48 | 27.94 | 25.40 | 3.05 | 6.86 | 10.31 |

THIS DRAWING CONTAINS INFORMATION THAT IS PROPRIETARY TO MOLEX ELECTRONIC TECHNOLOGIES, LLC AND SHOULD NOT BE USED WITHOUT WRITTEN PERMISSION

MIGRATED TO NX
EC NO: 168769 2017/11/23
DRWN: GGUNAGI 2018/06/19
CHK'D: KHLIM 2018/06/19
APPR: KHLIM

REV: C2

GENERAL TOLERANCES (UNLESS SPECIFIED)

| | MM | INCH |
|---|---|---|
| 4 PLACES | ± | ± |
| 3 PLACES | ± | ± |
| 2 PLACES | ± 0.2 | ± |
| 1 PLACES | ± | ± |
| 0 PLACES | ± | ± |

ANGULAR TOL ± 3.0

DRAFT WHERE APPLICABLE MUST REMAIN WITHIN DIMENSIONS

DIMENSION UNITS: MM
SCALE: NTS
DRWN BY: SKLIM01 DATE: 2006/05/25
CHK'D BY: PATEY DATE: 2006/07/05
APPR BY: PATEY DATE: 2006/07/05
DRAWING SIZE: A3
THIRD ANGLE PROJECTION

molex®

CUSTOM HEADER
C-GRID HDR, SMT W/CAP WITH/WITHOUT LOC. PEGS

PRODUCT CUSTOMER DRAWING

| SERIES | MATERIAL NUMBER | CUSTOMER |
|---|---|---|
| 87920 | SEE TABLE | GENERAL MARKET |

| DOCUMENT NUMBER | DOC TYPE | DOC PART | SHEET NUMBER |
|---|---|---|---|
| SD-87920-001 | PSD | 001 | 11 OF 14 |

| RELEASE STATUS | P1 | RELEASE DATE | 2018/06/19 16:18:34 |
|---|---|---|---|

FORMAT: Met-lega-master-tb-prod-A3
REVISION: C
DATE: 2017/02/06

| PART NUMBER IN PACKAGING OPTION | | | CKT SIZE | PEG | PLATE OPT. | DIMENSION | | | | | |
|---|---|---|---|---|---|---|---|---|---|---|---|
| TAPE & REEL WITH CAP | TUBE WITHOUT CAP | TUBE WITH CAP | | | | A | B | C | M | F | G |
| ------ | 87920-2611 | 87920-2621 | 26 | N | 1 | 33.02 | 30.48 | --- | 5.84 | 9.65 | 10.66 |
| ------ | 87920-2612 | 87920-2622 | 26 | N | 2 | 33.02 | 30.48 | --- | 5.84 | 9.65 | 10.66 |
| ------ | 87920-2613 | 87920-2623 | 26 | N | 3 | 33.02 | 30.48 | --- | 5.84 | 9.65 | 10.66 |
| ------ | 87920-2614 | 87920-2624 | 26 | Y | 1 | 33.02 | 30.48 | 27.94 | 5.84 | 9.65 | 10.66 |
| ------ | 87920-2615 | 87920-2625 | 26 | Y | 2 | 33.02 | 30.48 | 27.94 | 5.84 | 9.65 | 10.66 |
| ------ | 87920-2616 | 87920-2626 | 26 | Y | 3 | 33.02 | 30.48 | 27.94 | 5.84 | 9.65 | 10.66 |
| | | | | | | | | | | | |
| ------ | 87920-2811 | 87920-2821 | 28 | N | 1 | 35.56 | 33.02 | --- | 5.84 | 9.65 | 10.66 |
| ------ | 87920-2812 | 87920-2822 | 28 | N | 2 | 35.56 | 33.02 | --- | 5.84 | 9.65 | 10.66 |
| ------ | 87920-2813 | 87920-2823 | 28 | N | 3 | 35.56 | 33.02 | --- | 5.84 | 9.65 | 10.66 |
| ------ | 87920-2814 | 87920-2824 | 28 | Y | 1 | 35.56 | 33.02 | 30.48 | 5.84 | 9.65 | 10.66 |
| ------ | 87920-2815 | 87920-2825 | 28 | Y | 2 | 35.56 | 33.02 | 30.48 | 5.84 | 9.65 | 10.66 |
| ------ | 87920-2816 | 87920-2826 | 28 | Y | 3 | 35.56 | 33.02 | 30.48 | 5.84 | 9.65 | 10.66 |
| | | | | | | | | | | | |
| ------ | 87920-3011 | 87920-3021 | 30 | N | 1 | 38.10 | 35.56 | --- | 5.84 | 9.65 | 10.66 |
| ------ | 87920-3012 | 87920-3022 | 30 | N | 2 | 38.10 | 35.56 | --- | 5.84 | 9.65 | 10.66 |
| ------ | 87920-3013 | 87920-3023 | 30 | N | 3 | 38.10 | 35.56 | --- | 5.84 | 9.65 | 10.66 |
| ------ | 87920-3014 | 87920-3024 | 30 | Y | 1 | 38.10 | 35.56 | 33.02 | 5.84 | 9.65 | 10.66 |
| ------ | 87920-3015 | 87920-3025 | 30 | Y | 2 | 38.10 | 35.56 | 33.02 | 5.84 | 9.65 | 10.66 |
| ------ | 87920-3016 | 87920-3026 | 30 | Y | 3 | 38.10 | 35.56 | 33.02 | 5.84 | 9.65 | 10.66 |

| PART NUMBER IN PACKAGING OPTION | | | CKT SIZE | PEG | PLATE OPT. | DIMENSION | | | | | |
|---|---|---|---|---|---|---|---|---|---|---|---|
| TAPE & REEL WITH CAP | TUBE WITHOUT CAP | TUBE WITH CAP | | | | A | B | C | M | F | G |
| ------ | 87920-2641 | 87920-2651 | 26 | N | 1 | 33.02 | 30.48 | --- | 3.05 | 6.86 | 10.31 |
| ------ | 87920-2642 | 87920-2652 | 26 | N | 2 | 33.02 | 30.48 | --- | 3.05 | 6.86 | 10.31 |
| ------ | 87920-2643 | 87920-2653 | 26 | N | 3 | 33.02 | 30.48 | --- | 3.05 | 6.86 | 10.31 |
| ------ | 87920-2644 | 87920-2654 | 26 | Y | 1 | 33.02 | 30.48 | 27.94 | 3.05 | 6.86 | 10.31 |
| ------ | 87920-2645 | 87920-2655 | 26 | Y | 2 | 33.02 | 30.48 | 27.94 | 3.05 | 6.86 | 10.31 |
| ------ | 87920-2646 | 87920-2656 | 26 | Y | 3 | 33.02 | 30.48 | 27.94 | 3.05 | 6.86 | 10.31 |
| | | | | | | | | | | | |
| ------ | 87920-2841 | 87920-2851 | 28 | N | 1 | 35.56 | 33.02 | --- | 3.05 | 6.86 | 10.31 |
| ------ | 87920-2842 | 87920-2852 | 28 | N | 2 | 35.56 | 33.02 | --- | 3.05 | 6.86 | 10.31 |
| ------ | 87920-2843 | 87920-2853 | 28 | N | 3 | 35.56 | 33.02 | --- | 3.05 | 6.86 | 10.31 |
| ------ | 87920-2844 | 87920-2854 | 28 | Y | 1 | 35.56 | 33.02 | 30.48 | 3.05 | 6.86 | 10.31 |
| ------ | 87920-2845 | 87920-2855 | 28 | Y | 2 | 35.56 | 33.02 | 30.48 | 3.05 | 6.86 | 10.31 |
| ------ | 87920-2846 | 87920-2856 | 28 | Y | 3 | 35.56 | 33.02 | 30.48 | 3.05 | 6.86 | 10.31 |
| | | | | | | | | | | | |
| ------ | 87920-3041 | 87920-3051 | 30 | N | 1 | 38.10 | 35.56 | --- | 3.05 | 6.86 | 10.31 |
| ------ | 87920-3042 | 87920-3052 | 30 | N | 2 | 38.10 | 35.56 | --- | 3.05 | 6.86 | 10.31 |
| ------ | 87920-3043 | 87920-3053 | 30 | N | 3 | 38.10 | 35.56 | --- | 3.05 | 6.86 | 10.31 |
| ------ | 87920-3044 | 87920-3054 | 30 | Y | 1 | 38.10 | 35.56 | 33.02 | 3.05 | 6.86 | 10.31 |
| ------ | 87920-3045 | 87920-3055 | 30 | Y | 2 | 38.10 | 35.56 | 33.02 | 3.05 | 6.86 | 10.31 |
| ------ | 87920-3046 | 87920-3056 | 30 | Y | 3 | 38.10 | 35.56 | 33.02 | 3.05 | 6.86 | 10.31 |

THIS DRAWING CONTAINS INFORMATION THAT IS PROPRIETARY TO MOLEX ELECTRONIC TECHNOLOGIES, LLC AND SHOULD NOT BE USED WITHOUT WRITTEN PERMISSION

MIGRATED TO NX
EC NO: 168769 2017/11/23
DRWN: GGUNAGI 2018/06/19
CHK'D: KHLIM 2018/06/19
APPR: KHLIM

REV: C2

GENERAL TOLERANCES (UNLESS SPECIFIED)

| | MM | INCH |
|---|---|---|
| 4 PLACES | ± | ± |
| 3 PLACES | ± | ± |
| 2 PLACES | ± 0.2 | ± |
| 1 PLACES | ± | ± |
| 0 PLACES | ± | ± |

ANGULAR TOL ± 3.0

DRAFT WHERE APPLICABLE MUST REMAIN WITHIN DIMENSIONS

DIMENSION UNITS: MM
SCALE: NTS
DRWN BY: SKLIM01 DATE: 2006/05/25
CHK'D BY: PATEY DATE: 2006/07/05
APPR BY: PATEY DATE: 2006/07/05
DRAWING SIZE: A3
THIRD ANGLE PROJECTION

molex®

CUSTOM HEADER
C-GRID HDR, SMT W/CAP WITH/WITHOUT LOC. PEGS

PRODUCT CUSTOMER DRAWING

| SERIES | MATERIAL NUMBER | CUSTOMER |
|---|---|---|
| 87920 | SEE TABLE | GENERAL MARKET |

| DOCUMENT NUMBER | DOC TYPE | DOC PART | SHEET NUMBER |
|---|---|---|---|
| SD-87920-001 | PSD | 001 | 12 OF 14 |

| RELEASE STATUS | P1 | RELEASE DATE | 2018/06/19 16:18:34 |
|---|---|---|---|

FORMAT: Met-lega-master-tb-prod-A3
REVISION: C
DATE: 2017/02/06

| PART NUMBER IN PACKAGING OPTION | | | CKT SIZE | PEG | PLATE OPT. | DIMENSION | | | | | |
|---|---|---|---|---|---|---|---|---|---|---|---|
| TAPE & REEL WITH CAP | TUBE WITHOUT CAP | TUBE WITH CAP | | | | A | B | C | M | F | G |
| ------ | 87920-3211 | 87920-3221 | 32 | N | 1 | 40.64 | 38.10 | --- | 5.84 | 9.65 | 10.66 |
| ------ | 87920-3212 | 87920-3222 | 32 | N | 2 | 40.64 | 38.10 | --- | 5.84 | 9.65 | 10.66 |
| ------ | 87920-3213 | 87920-3223 | 32 | N | 3 | 40.64 | 38.10 | --- | 5.84 | 9.65 | 10.66 |
| ------ | 87920-3214 | 87920-3224 | 32 | Y | 1 | 40.64 | 38.10 | 35.56 | 5.84 | 9.65 | 10.66 |
| ------ | 87920-3215 | 87920-3225 | 32 | Y | 2 | 40.64 | 38.10 | 35.56 | 5.84 | 9.65 | 10.66 |
| ------ | 87920-3216 | 87920-3226 | 32 | Y | 3 | 40.64 | 38.10 | 35.56 | 5.84 | 9.65 | 10.66 |
| | | | | | | | | | | | |
| ------ | 87920-3411 | 87920-3421 | 34 | N | 1 | 43.18 | 40.64 | --- | 5.84 | 9.65 | 10.66 |
| ------ | 87920-3412 | 87920-3422 | 34 | N | 2 | 43.18 | 40.64 | --- | 5.84 | 9.65 | 10.66 |
| ------ | 87920-3413 | 87920-3423 | 34 | N | 3 | 43.18 | 40.64 | --- | 5.84 | 9.65 | 10.66 |
| ------ | 87920-3414 | 87920-3424 | 34 | Y | 1 | 43.18 | 40.64 | 38.10 | 5.84 | 9.65 | 10.66 |
| ------ | 87920-3415 | 87920-3425 | 34 | Y | 2 | 43.18 | 40.64 | 38.10 | 5.84 | 9.65 | 10.66 |
| ------ | 87920-3416 | 87920-3426 | 34 | Y | 3 | 43.18 | 40.64 | 38.10 | 5.84 | 9.65 | 10.66 |
| | | | | | | | | | | | |
| ------ | 87920-3611 | 87920-3621 | 36 | N | 1 | 45.72 | 43.18 | --- | 5.84 | 9.65 | 10.66 |
| ------ | 87920-3612 | 87920-3622 | 36 | N | 2 | 45.72 | 43.18 | --- | 5.84 | 9.65 | 10.66 |
| ------ | 87920-3613 | 87920-3623 | 36 | N | 3 | 45.72 | 43.18 | --- | 5.84 | 9.65 | 10.66 |
| ------ | 87920-3614 | 87920-3624 | 36 | Y | 1 | 45.72 | 43.18 | 40.64 | 5.84 | 9.65 | 10.66 |
| ------ | 87920-3615 | 87920-3625 | 36 | Y | 2 | 45.72 | 43.18 | 40.64 | 5.84 | 9.65 | 10.66 |
| ------ | 87920-3616 | 87920-3626 | 36 | Y | 3 | 45.72 | 43.18 | 40.64 | 5.84 | 9.65 | 10.66 |

| PART NUMBER IN PACKAGING OPTION | | | CKT SIZE | PEG | PLATE OPT. | DIMENSION | | | | | |
|---|---|---|---|---|---|---|---|---|---|---|---|
| TAPE & REEL WITH CAP | TUBE WITHOUT CAP | TUBE WITH CAP | | | | A | B | C | M | F | G |
| ------ | 87920-3241 | 87920-3251 | 32 | N | 1 | 40.64 | 38.10 | --- | 3.05 | 6.86 | 10.31 |
| ------ | 87920-3242 | 87920-3252 | 32 | N | 2 | 40.64 | 38.10 | --- | 3.05 | 6.86 | 10.31 |
| ------ | 87920-3243 | 87920-3253 | 32 | N | 3 | 40.64 | 38.10 | --- | 3.05 | 6.86 | 10.31 |
| ------ | 87920-3244 | 87920-3254 | 32 | Y | 1 | 40.64 | 38.10 | 35.56 | 3.05 | 6.86 | 10.31 |
| ------ | 87920-3245 | 87920-3255 | 32 | Y | 2 | 40.64 | 38.10 | 35.56 | 3.05 | 6.86 | 10.31 |
| ------ | 87920-3246 | 87920-3256 | 32 | Y | 3 | 40.64 | 38.10 | 35.56 | 3.05 | 6.86 | 10.31 |
| | | | | | | | | | | | |
| ------ | 87920-3441 | 87920-3451 | 34 | N | 1 | 43.18 | 40.64 | --- | 3.05 | 6.86 | 10.31 |
| ------ | 87920-3442 | 87920-3452 | 34 | N | 2 | 43.18 | 40.64 | --- | 3.05 | 6.86 | 10.31 |
| ------ | 87920-3443 | 87920-3453 | 34 | N | 3 | 43.18 | 40.64 | --- | 3.05 | 6.86 | 10.31 |
| ------ | 87920-3444 | 87920-3454 | 34 | Y | 1 | 43.18 | 40.64 | 38.10 | 3.05 | 6.86 | 10.31 |
| ------ | 87920-3445 | 87920-3455 | 34 | Y | 2 | 43.18 | 40.64 | 38.10 | 3.05 | 6.86 | 10.31 |
| ------ | 87920-3446 | 87920-3456 | 34 | Y | 3 | 43.18 | 40.64 | 38.10 | 3.05 | 6.86 | 10.31 |
| | | | | | | | | | | | |
| ------ | 87920-3641 | 87920-3651 | 36 | N | 1 | 45.72 | 43.18 | --- | 3.05 | 6.86 | 10.31 |
| ------ | 87920-3642 | 87920-3652 | 36 | N | 2 | 45.72 | 43.18 | --- | 3.05 | 6.86 | 10.31 |
| ------ | 87920-3643 | 87920-3653 | 36 | N | 3 | 45.72 | 43.18 | --- | 3.05 | 6.86 | 10.31 |
| ------ | 87920-3644 | 87920-3654 | 36 | Y | 1 | 45.72 | 43.18 | 40.64 | 3.05 | 6.86 | 10.31 |
| ------ | 87920-3645 | 87920-3655 | 36 | Y | 2 | 45.72 | 43.18 | 40.64 | 3.05 | 6.86 | 10.31 |
| ------ | 87920-3646 | 87920-3656 | 36 | Y | 3 | 45.72 | 43.18 | 40.64 | 3.05 | 6.86 | 10.31 |

THIS DRAWING CONTAINS INFORMATION THAT IS PROPRIETARY TO MOLEX ELECTRONIC TECHNOLOGIES, LLC AND SHOULD NOT BE USED WITHOUT WRITTEN PERMISSION

MIGRATED TO NX
EC NO: 168769 2017/11/23
DRWN: GGUNAGI 2018/06/19
CHK'D: KHLIM 2018/06/19
APPR: KHLIM

REV: C2

GENERAL TOLERANCES (UNLESS SPECIFIED)

| | MM | INCH |
|---|---|---|
| 4 PLACES | ± | ± |
| 3 PLACES | ± | ± |
| 2 PLACES | ± 0.2 | ± |
| 1 PLACES | ± | ± |
| 0 PLACES | ± | ± |

ANGULAR TOL ± 3.0

DRAFT WHERE APPLICABLE MUST REMAIN WITHIN DIMENSIONS

DIMENSION UNITS: MM
SCALE: NTS
DRWN BY: SKLIM01 DATE: 2006/05/25
CHK'D BY: PATEY DATE: 2006/07/05
APPR BY: PATEY DATE: 2006/07/05
DRAWING SIZE: A3
THIRD ANGLE PROJECTION

molex®

CUSTOM HEADER
C-GRID HDR, SMT W/CAP WITH/WITHOUT LOC. PEGS

PRODUCT CUSTOMER DRAWING

| SERIES | MATERIAL NUMBER | CUSTOMER |
|---|---|---|
| 87920 | SEE TABLE | GENERAL MARKET |

| DOCUMENT NUMBER | DOC TYPE | DOC PART | SHEET NUMBER |
|---|---|---|---|
| SD-87920-001 | PSD | 001 | 13 OF 14 |

| RELEASE STATUS | P1 | RELEASE DATE | 2018/06/19 16:18:34 |
|---|---|---|---|

FORMAT: Met-lega-master-tb-prod-A3
REVISION: C
DATE: 2017/02/06

| PART NUMBER IN PACKAGING OPTION | | | CKT SIZE | PEG | PLATE OPT. | DIMENSION | | | | | |
|---|---|---|---|---|---|---|---|---|---|---|---|
| TAPE & REEL WITH CAP | TUBE WITHOUT CAP | TUBE WITH CAP | | | | A | B | C | M | F | G |
| ------ | 87920-3811 | 87920-3821 | 38 | N | 1 | 48.26 | 45.72 | --- | 5.84 | 9.65 | 10.66 |
| ------ | 87920-3812 | 87920-3822 | 38 | N | 2 | 48.26 | 45.72 | --- | 5.84 | 9.65 | 10.66 |
| ------ | 87920-3813 | 87920-3823 | 38 | N | 3 | 48.26 | 45.72 | --- | 5.84 | 9.65 | 10.66 |
| ------ | 87920-3814 | 87920-3824 | 38 | Y | 1 | 48.26 | 45.72 | 43.18 | 5.84 | 9.65 | 10.66 |
| ------ | 87920-3815 | 87920-3825 | 38 | Y | 2 | 48.26 | 45.72 | 43.18 | 5.84 | 9.65 | 10.66 |
| ------ | 87920-3816 | 87920-3826 | 38 | Y | 3 | 48.26 | 45.72 | 43.18 | 5.84 | 9.65 | 10.66 |
| | | | | | | | | | | | |
| 87920-4001 | 87920-4011 | 87920-4021 | 40 | N | 1 | 50.80 | 48.26 | --- | 5.84 | 9.65 | 10.66 |
| 87920-4002 | 87920-4012 | 87920-4022 | 40 | N | 2 | 50.80 | 48.26 | --- | 5.84 | 9.65 | 10.66 |
| 87920-4003 | 87920-4013 | 87920-4023 | 40 | N | 3 | 50.80 | 48.26 | --- | 5.84 | 9.65 | 10.66 |
| 87920-4004 | 87920-4014 | 87920-4024 | 40 | Y | 1 | 50.80 | 48.26 | 45.72 | 5.84 | 9.65 | 10.66 |
| 87920-4005 | 87920-4015 | 87920-4025 | 40 | Y | 2 | 50.80 | 48.26 | 45.72 | 5.84 | 9.65 | 10.66 |
| 87920-4006 | 87920-4016 | 87920-4026 | 40 | Y | 3 | 50.80 | 48.26 | 45.72 | 5.84 | 9.65 | 10.66 |

| PART NUMBER IN PACKAGING OPTION | | | CKT SIZE | PEG | PLATE OPT. | DIMENSION | | | | | |
|---|---|---|---|---|---|---|---|---|---|---|---|
| TAPE & REEL WITH CAP | TUBE WITHOUT CAP | TUBE WITH CAP | | | | A | B | C | M | F | G |
| ------ | 87920-3841 | 87920-3851 | 38 | N | 1 | 48.26 | 45.72 | --- | 3.05 | 6.86 | 10.31 |
| ------ | 87920-3842 | 87920-3852 | 38 | N | 2 | 48.26 | 45.72 | --- | 3.05 | 6.86 | 10.31 |
| ------ | 87920-3843 | 87920-3853 | 38 | N | 3 | 48.26 | 45.72 | --- | 3.05 | 6.86 | 10.31 |
| ------ | 87920-3844 | 87920-3854 | 38 | Y | 1 | 48.26 | 45.72 | 43.18 | 3.05 | 6.86 | 10.31 |
| ------ | 87920-3845 | 87920-3855 | 38 | Y | 2 | 48.26 | 45.72 | 43.18 | 3.05 | 6.86 | 10.31 |
| ------ | 87920-3846 | 87920-3856 | 38 | Y | 3 | 48.26 | 45.72 | 43.18 | 3.05 | 6.86 | 10.31 |
| | | | | | | | | | | | |
| 87920-4031 | 87920-4041 | 87920-4051 | 40 | N | 1 | 50.80 | 48.26 | --- | 3.05 | 6.86 | 10.31 |
| 87920-4032 | 87920-4042 | 87920-4052 | 40 | N | 2 | 50.80 | 48.26 | --- | 3.05 | 6.86 | 10.31 |
| 87920-4033 | 87920-4043 | 87920-4053 | 40 | N | 3 | 50.80 | 48.26 | --- | 3.05 | 6.86 | 10.31 |
| 87920-4034 | 87920-4044 | 87920-4054 | 40 | Y | 1 | 50.80 | 48.26 | 45.72 | 3.05 | 6.86 | 10.31 |
| 87920-4035 | 87920-4045 | 87920-4055 | 40 | Y | 2 | 50.80 | 48.26 | 45.72 | 3.05 | 6.86 | 10.31 |
| 87920-4036 | 87920-4046 | 87920-4056 | 40 | Y | 3 | 50.80 | 48.26 | 45.72 | 3.05 | 6.86 | 10.31 |

THIS DRAWING CONTAINS INFORMATION THAT IS PROPRIETARY TO MOLEX ELECTRONIC TECHNOLOGIES, LLC AND SHOULD NOT BE USED WITHOUT WRITTEN PERMISSION

MIGRATED TO NX

EC NO: 168769 2017/11/23
DRWN: GGUNAGI 2018/06/19
CHK'D: KHLIM 2018/06/19
APPR: KHLIM

REV C2

GENERAL TOLERANCES (UNLESS SPECIFIED)

| | MM | INCH |
|---|---|---|
| 4 PLACES | ± | ± |
| 3 PLACES | ± | ± |
| 2 PLACES | ± 0.2 | ± |
| 1 PLACES | ± | ± |
| 0 PLACES | ± | ± |

ANGULAR TOL ± 3.0

DRAFT WHERE APPLICABLE MUST REMAIN WITHIN DIMENSIONS

DIMENSION UNITS: MM
SCALE: NTS
DRWN BY: SKLIM01 DATE: 2006/05/25
CHK'D BY: PATEY DATE: 2006/07/05
APPR BY: PATEY DATE: 2006/07/05
DRAWING SIZE: A3
THIRD ANGLE PROJECTION

molex®

CUSTOM HEADER
C-GRID HDR, SMT W/CAP WITH/WITHOUT LOC. PEGS

PRODUCT CUSTOMER DRAWING

SERIES: 87920
MATERIAL NUMBER: SEE TABLE
CUSTOMER: GENERAL MARKET
DOCUMENT NUMBER: SD-87920-001
DOC TYPE: PSD
DOC PART: 001
SHEET NUMBER: 14 OF 14

RELEASE STATUS: P1 RELEASE DATE: 2018/06/19 16:18:34

FORMAT: Met-lega-master-tb-prod-A3
REVISION: C
DATE: 2017/02/06

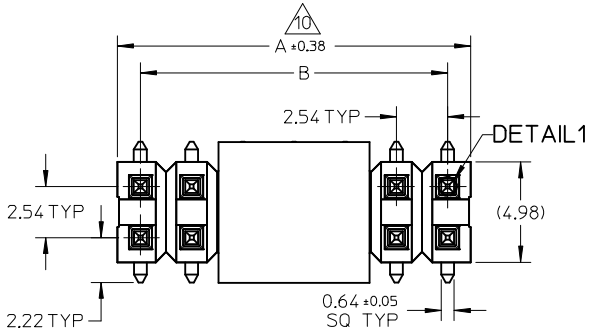


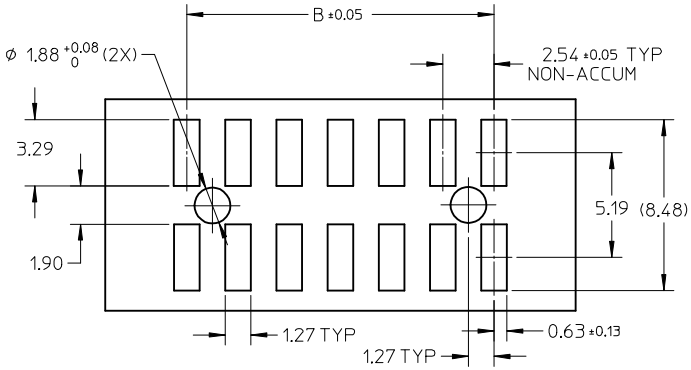


RECOMMENDED PCB LAYOUT

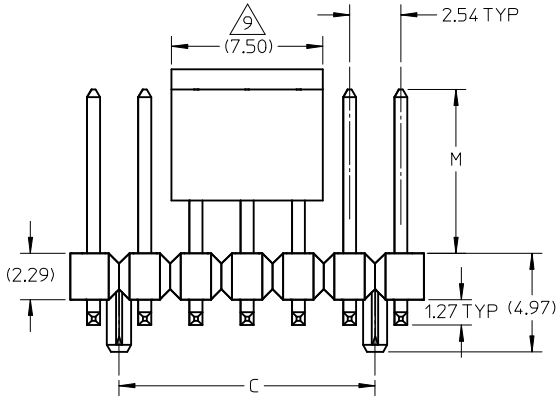


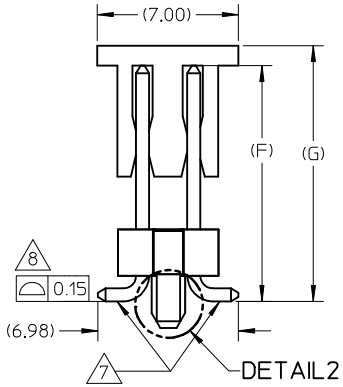


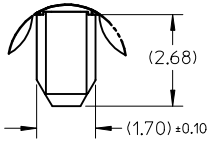


DETAIL2

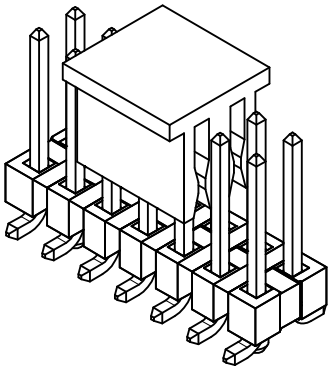

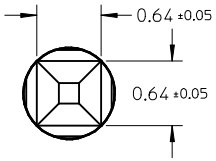


DETAIL1

NOTES:

1. MATERIAL:
   HSG: LCP, GLASS-FILLED, UL94V-0,COLOR: BLACK
   CAP: NYLON, GLASS-FILLED, UL94V-0, COLOR: BLACK
   PIN: 0.64MM SQ, COPPER ALLOY
2. PLATING TYPE:
   (1) 0.05μm MIN. GOLD PLATE ON CONTACT AND
   2.50μm MIN. TIN ON SOLDERTAIL OVER
   1.25μm MIN. NICKEL OVERALL.
   (2) 0.38μm MIN. GOLD PLATE ON CONTACT AND
   2.00μm MIN. TIN ON SOLDERTAIL OVER
   1.25μm MIN. NICKEL OVERALL.
   (3) 0.75μm MIN. GOLD PLATE ON CONTACT AND
   2.00μm MIN. TIN ON SOLDERTAIL OVER
   1.25μm MIN. NICKEL OVERALL.
   (4) 2.50μm MIN. TIN OVERALL
   1.25μm MIN. NICKEL OVERALL
3. PACKAGING TYPE: SEE TABLE
4. PCB THICKNESS 1.60+/-0.10mm
5. PRODUCT SPECIFICATION: PS-87920-019
6. WAFER TO BE FLAT WITHIN 0.003 mm/mm
7. BEND DEPRESSION IS ACCEPTED SO LONG AS IT DOES NOT AFFECT THE OVERALL COPLANARITY OF TAIL
8. COPLANARITY IS TO BE MEASURED BY RESTING THE SOLDER TAIL ON A FLAT SURFACE
9. CAP LOCATION IS CENTERED ALONG THE MATING ENDS AS SHOWN. TOP SURFACE OF CAP TO BE FLAT FOR THE PURPOSE OF PICK & PLACE BY VACUUM SUCTION NOZZLE
10. IRREGULAR CIRCUIT CUTOFF WITHIN BREAKAWAY SECTION IS PERMISSIBLE. CUTTING OR CHIPPING OF THE MAIN BODY IS NOT ACCEPTABLE
11. PARTS ARE NOT STACKABLE ON 2.54 CENTER
12. THE ABOVE CKT 14 IS FOR ILLUSTRATION PURPOSE ONLY
13. TUBE LENGTH IS 560MM PER STANDARD
14. PACKAGING SPECIFICATION:
    TRAY: PK-89990-489
    TUBE: PK-89990-507
    TAPE & REEL: PK-89990-479

| | | | |
|---|---|---|---|
| SEE SHT 2 | EC NO: S2015-0282 | DRWN:ATSEE 2014/09/23 | CHKD:FANNYWONG 2014/09/23 |
| APPR:LBLEE 2014/10/09 | DESCRIPTION | REV | |
| A3 | | | |

QUALITY SYMBOLS: $F_A$=0, $F_C$=0, $F_P$=0

GENERAL TOLERANCES (UNLESS SPECIFIED)

| | mm | INCH |
|---|---|---|
| 4 PLACES | ± --- | ± --- |
| 3 PLACES | ± --- | ± --- |
| 2 PLACES | ± 0.2 | ± --- |
| 1 PLACE | ± --- | ± --- |
| ANGULAR ± 3 ° | | |

DRAFT WHERE APPLICABLE MUST REMAIN WITHIN DIMENSIONS

| | | | |
|---|---|---|---|
| DIMENSION STYLE: MM ONLY | SCALE: NTS | DESIGN UNITS: METRIC | THIRD ANGLE PROJECTION |
| DRAWN BY: SKLIM01 | DATE: 2006/10/09 | TITLE: CUSTOM HEADER 2.54MM PITCH DUAL ROW HEADER, SINGLE WAFER SMT | |
| CHECKED BY: CWLAM | DATE: 2007/02/09 | | |
| APPROVED BY: MLONG | DATE: 2010/03/19 | molex MOLEX INCORPORATED | |
| MATERIAL NO.: SEE TABLE | | DOCUMENT NO.: SD-87920-050 | SHEET NO.: 1 OF 10 |
| SIZE: A3 | THIS DRAWING CONTAINS INFORMATION THAT IS PROPRIETARY TO MOLEX INCORPORATED AND SHOULD NOT BE USED WITHOUT WRITTEN PERMISSION | | |

CIRCUITS POSITION CONFIGURATION

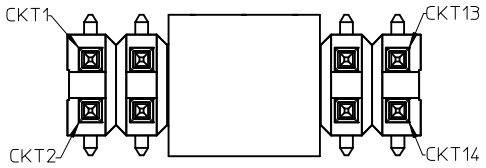


PART WITHOUT PEG & CAP VERSION

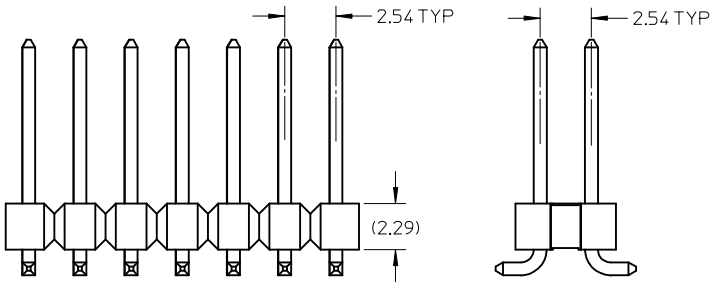


CAP POSITION FOR 87920-0807

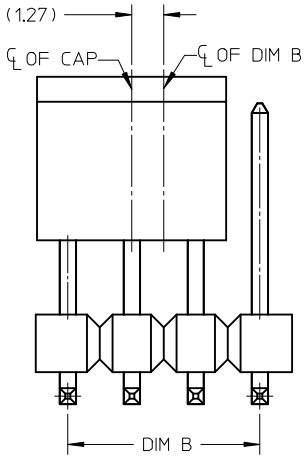


PART WITHOUT CAP WITH PEGS PACK IN TUBE ORIENTATION (FOR REFERENCE USED ONLY)

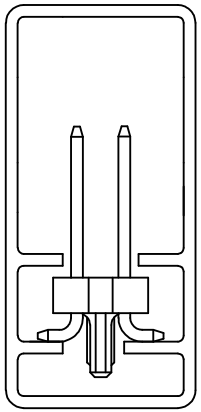

| | | | |
|---|---|---|---|
| ADD CAP RELOCATION FOR 87920-0807 | 2014/09/23 | | |
| EC NO: S2015-0282 | 2014/09/23 | | |
| DRWN:ATSEE | 2014/10/09 | | |
| CH'KD:FANNYWONG | | | |
| APPR:LBLEE | | | |
| A3 | REV | DESCRIPTION | |

QUALITY SYMBOLS

F/A=0

F/C=0

F/P=0

GENERAL TOLERANCES (UNLESS SPECIFIED)

| | mm | INCH |
|---|---|---|
| 4 PLACES | ± --- | ± --- |
| 3 PLACES | ± --- | ± --- |
| 2 PLACES | ± 0.2 | ± --- |
| 1 PLACE | ± --- | ± --- |
| ANGULAR ± 3 ° | | |

DRAFT WHERE APPLICABLE MUST REMAIN WITHIN DIMENSIONS

DIMENSION STYLE: MM ONLY

SCALE: NTS

DESIGN UNITS: METRIC

THIRD ANGLE PROJECTION

| | | |
|---|---|---|
| DRAWN BY | SKLIM01 | DATE 2006/10/09 |
| CHECKED BY | CWLAM | DATE 2007/02/09 |
| APPROVED BY | MLONG | DATE 2010/03/19 |
| MATERIAL NO. | SEE TABLE | |

TITLE: CUSTOM HEADER 2.54MM PITCH DUAL ROW HEADER, SINGLE WAFER SMT

molex MOLEX INCORPORATED

DOCUMENT NO. SD-87920-050

SHEET NO. 2 OF 10

SIZE A3

THIS DRAWING CONTAINS INFORMATION THAT IS PROPRIETARY TO MOLEX INCORPORATED AND SHOULD NOT BE USED WITHOUT WRITTEN PERMISSION

| PART NUMBER IN PACKAGING OPTION | | | CKT SIZE | PEG | PLATE OPT. | DIMENSION | | | | | |
|---|---|---|---|---|---|---|---|---|---|---|---|
| WITH CAP IN TAPE & REEL | W/O CAP IN TRAY | WITH CAP IN TRAY | | | | A | B | C | G | F | M |
| 87920-0427 | 87920-0461 | 87920-0465 | 04 | N | 1 | 5.08 | 2.54 | - | 12.69 | 11.69 | 8.13 |
| 87920-0428 | 87920-0462 | 87920-0466 | 04 | N | 2 | 5.08 | 2.54 | - | 12.69 | 11.69 | 8.13 |
| 87920-0429 | 87920-0463 | 87920-0467 | 04 | N | 3 | 5.08 | 2.54 | - | 12.69 | 11.69 | 8.13 |
| 87920-0430 | 87920-0464 | 87920-0468 | 04 | N | 4 | 5.08 | 2.54 | - | 12.69 | 11.69 | 8.13 |
| | | | | | | | | | | | |
| 87920-0627 | 87920-0661 | 87920-0665 | 06 | N | 1 | 7.62 | 5.08 | - | 12.69 | 11.69 | 8.13 |
| 87920-0628 | 87920-0662 | 87920-0666 | 06 | N | 2 | 7.62 | 5.08 | - | 12.69 | 11.69 | 8.13 |
| 87920-0629 | 87920-0663 | 87920-0667 | 06 | N | 3 | 7.62 | 5.08 | - | 12.69 | 11.69 | 8.13 |
| 87920-0630 | 87920-0664 | 87920-0668 | 06 | N | 4 | 7.62 | 5.08 | - | 12.69 | 11.69 | 8.13 |

| PART NUMBER IN PACKAGING OPTION | | | CKT SIZE | PEG | PLATE OPT. | DIMENSION | | | | | |
|---|---|---|---|---|---|---|---|---|---|---|---|
| W/O CAP IN TRAY | - | WITH CAP IN TRAY | | | | A | B | C | G | F | M |
| 87920-0447 | - | 87920-0485 | 04 | N | 1 | 5.08 | 2.54 | - | 15.23 | 14.23 | 10.67 |
| 87920-0448 | - | 87920-0486 | 04 | N | 2 | 5.08 | 2.54 | - | 15.23 | 14.23 | 10.67 |
| 87920-0449 | - | 87920-0487 | 04 | N | 3 | 5.08 | 2.54 | - | 15.23 | 14.23 | 10.67 |
| 87920-0450 | - | 87920-0488 | 04 | N | 4 | 5.08 | 2.54 | - | 15.23 | 14.23 | 10.67 |
| | | | | | | | | | | | |
| 87920-0647 | - | 87920-0685 | 06 | N | 1 | 7.62 | 5.08 | - | 15.23 | 14.23 | 10.67 |
| 87920-0648 | - | 87920-0686 | 06 | N | 2 | 7.62 | 5.08 | - | 15.23 | 14.23 | 10.67 |
| 87920-0649 | - | 87920-0687 | 06 | N | 3 | 7.62 | 5.08 | - | 15.23 | 14.23 | 10.67 |
| 87920-0650 | - | 87920-0688 | 06 | N | 4 | 7.62 | 5.08 | - | 15.23 | 14.23 | 10.67 |

| PART NUMBER IN PACKAGING OPTION | | | CKT SIZE | PEG | PLATE OPT. | DIMENSION | | | | | |
|---|---|---|---|---|---|---|---|---|---|---|---|
| WITH CAP IN TAPE & REEL | W/O CAP IN TUBE | WITH CAP IN TUBE | | | | A | B | C | G | F | M |
| 87920-0827 | 87920-0861 | 87920-0865 | 08 | N | 1 | 10.16 | 7.62 | - | 12.69 | 11.69 | 8.13 |
| 87920-0828 | 87920-0862 | 87920-0866 | 08 | N | 2 | 10.16 | 7.62 | - | 12.69 | 11.69 | 8.13 |
| 87920-0829 | 87920-0863 | 87920-0867 | 08 | N | 3 | 10.16 | 7.62 | - | 12.69 | 11.69 | 8.13 |
| 87920-0830 | 87920-0864 | 87920-0868 | 08 | N | 4 | 10.16 | 7.62 | - | 12.69 | 11.69 | 8.13 |
| 87920-0837 | 87920-0871 | 87920-0875 | 08 | Y | 1 | 10.16 | 7.62 | 5.08 | 12.69 | 11.69 | 8.13 |
| 87920-0838 | 87920-0872 | 87920-0876 | 08 | Y | 2 | 10.16 | 7.62 | 5.08 | 12.69 | 11.69 | 8.13 |
| 87920-0839 | 87920-0873 | 87920-0877 | 08 | Y | 3 | 10.16 | 7.62 | 5.08 | 12.69 | 11.69 | 8.13 |
| 87920-0840 | 87920-0874 | 87920-0878 | 08 | Y | 4 | 10.16 | 7.62 | 5.08 | 12.69 | 11.69 | 8.13 |
| 87920-0807 | 87920-0884 | 87920-0888 | 08 | N | 4 | 10.16 | 7.62 | - | 15.23 | 14.23 | 10.67 |
| 87920-0808 | 87920-0894 | 87920-0898 | 08 | Y | 4 | 10.16 | 7.62 | 5.08 | 15.23 | 14.23 | 10.67 |

| PART NUMBER IN PACKAGING OPTION | | | CKT SIZE | PEG | PLATE OPT. | DIMENSION | | | | | |
|---|---|---|---|---|---|---|---|---|---|---|---|
| W/O CAP IN TRAY | W/O CAP IN TUBE | WITH CAP IN TUBE | | | | A | B | C | G | F | M |
| 87920-0847 | 87920-0881 | 87920-0885 | 08 | N | 1 | 10.16 | 7.62 | - | 15.23 | 14.23 | 10.67 |
| 87920-0848 | 87920-0882 | 87920-0886 | 08 | N | 2 | 10.16 | 7.62 | - | 15.23 | 14.23 | 10.67 |
| 87920-0849 | 87920-0883 | 87920-0887 | 08 | N | 3 | 10.16 | 7.62 | - | 15.23 | 14.23 | 10.67 |
| 87920-0850 | 87920-0884 | 87920-0888 | 08 | N | 4 | 10.16 | 7.62 | - | 15.23 | 14.23 | 10.67 |
| 87920-0857 | 87920-0891 | 87920-0895 | 08 | Y | 1 | 10.16 | 7.62 | 5.08 | 15.23 | 14.23 | 10.67 |
| 87920-0858 | 87920-0892 | 87920-0896 | 08 | Y | 2 | 10.16 | 7.62 | 5.08 | 15.23 | 14.23 | 10.67 |
| 87920-0859 | 87920-0893 | 87920-0897 | 08 | Y | 3 | 10.16 | 7.62 | 5.08 | 15.23 | 14.23 | 10.67 |
| 87920-0860 | 87920-0894 | 87920-0898 | 08 | Y | 4 | 10.16 | 7.62 | 5.08 | 15.23 | 14.23 | 10.67 |

87920-0807 : REFER TO SHEET 2 FOR CAP LOCATION

SEE SHT 2
EC NO: S2015-0282
DRWN:ATSEE 2014/09/23
CH'KD:FANNYWONG 2014/09/23
APPR:LBLEE 2014/10/09
A3
REV DESCRIPTION

QUALITY SYMBOLS
FA=0
FC=0
FP=0

GENERAL TOLERANCES (UNLESS SPECIFIED)

| | mm | INCH |
|---|---|---|
| 4 PLACES | ± --- | ± --- |
| 3 PLACES | ± --- | ± --- |
| 2 PLACES | ± 0.2 | ± --- |
| 1 PLACE | ± --- | ± --- |
| ANGULAR ± 3 ° | | |

DRAFT WHERE APPLICABLE MUST REMAIN WITHIN DIMENSIONS

DIMENSION STYLE: MM ONLY
SCALE: NTS
DESIGN UNITS: METRIC
THIRD ANGLE PROJECTION

DRAWN BY: SKLIM01 DATE: 2006/10/09
CHECKED BY: CWLAM DATE: 2007/02/09
APPROVED BY: MLONG DATE: 2010/03/19
MATERIAL NO.: SEE TABLE
SIZE: A3

TITLE: CUSTOM HEADER 2.54MM PITCH DUAL ROW HEADER, SINGLE WAFER SMT

molex MOLEX INCORPORATED

DOCUMENT NO.: SD-87920-050
SHEET NO.: 3 OF 10

THIS DRAWING CONTAINS INFORMATION THAT IS PROPRIETARY TO MOLEX INCORPORATED AND SHOULD NOT BE USED WITHOUT WRITTEN PERMISSION

| PART NUMBER IN PACKAGING OPTION | | | CKT SIZE | PEG | PLATE OPT. | DIMENSION | | | | | |
|---|---|---|---|---|---|---|---|---|---|---|---|
| WITH CAP IN TAPE & REEL | W/O CAP IN TUBE | WITH CAP IN TUBE | | | | A | B | C | G | F | M |
| 87920-1027 | 87920-1061 | 87920-1065 | 10 | N | 1 | 12.70 | 10.16 | - | 12.69 | 11.69 | 8.13 |
| 87920-1028 | 87920-1062 | 87920-1066 | 10 | N | 2 | 12.70 | 10.16 | - | 12.69 | 11.69 | 8.13 |
| 87920-1029 | 87920-1063 | 87920-1067 | 10 | N | 3 | 12.70 | 10.16 | - | 12.69 | 11.69 | 8.13 |
| 87920-1030 | 87920-1064 | 87920-1068 | 10 | N | 4 | 12.70 | 10.16 | - | 12.69 | 11.69 | 8.13 |
| 87920-1037 | 87920-1071 | 87920-1075 | 10 | Y | 1 | 12.70 | 10.16 | 7.62 | 12.69 | 11.69 | 8.13 |
| 87920-1038 | 87920-1072 | 87920-1076 | 10 | Y | 2 | 12.70 | 10.16 | 7.62 | 12.69 | 11.69 | 8.13 |
| 87920-1039 | 87920-1073 | 87920-1077 | 10 | Y | 3 | 12.70 | 10.16 | 7.62 | 12.69 | 11.69 | 8.13 |
| 87920-1040 | 87920-1074 | 87920-1078 | 10 | Y | 4 | 12.70 | 10.16 | 7.62 | 12.69 | 11.69 | 8.13 |
| | | | | | | | | | | | |
| 87920-1227 | 87920-1261 | 87920-1265 | 12 | N | 1 | 15.24 | 12.70 | - | 12.69 | 11.69 | 8.13 |
| 87920-1228 | 87920-1262 | 87920-1266 | 12 | N | 2 | 15.24 | 12.70 | - | 12.69 | 11.69 | 8.13 |
| 87920-1229 | 87920-1263 | 87920-1267 | 12 | N | 3 | 15.24 | 12.70 | - | 12.69 | 11.69 | 8.13 |
| 87920-1230 | 87920-1264 | 87920-1268 | 12 | N | 4 | 15.24 | 12.70 | - | 12.69 | 11.69 | 8.13 |
| 87920-1237 | 87920-1271 | 87920-1275 | 12 | Y | 1 | 15.24 | 12.70 | 10.16 | 12.69 | 11.69 | 8.13 |
| 87920-1238 | 87920-1272 | 87920-1276 | 12 | Y | 2 | 15.24 | 12.70 | 10.16 | 12.69 | 11.69 | 8.13 |
| 87920-1239 | 87920-1273 | 87920-1277 | 12 | Y | 3 | 15.24 | 12.70 | 10.16 | 12.69 | 11.69 | 8.13 |
| 87920-1240 | 87920-1274 | 87920-1278 | 12 | Y | 4 | 15.24 | 12.70 | 10.16 | 12.69 | 11.69 | 8.13 |
| | | | | | | | | | | | |
| 87920-1427 | 87920-1461 | 87920-1465 | 14 | N | 1 | 17.78 | 15.24 | - | 12.69 | 11.69 | 8.13 |
| 87920-1428 | 87920-1462 | 87920-1466 | 14 | N | 2 | 17.78 | 15.24 | - | 12.69 | 11.69 | 8.13 |
| 87920-1429 | 87920-1463 | 87920-1467 | 14 | N | 3 | 17.78 | 15.24 | - | 12.69 | 11.69 | 8.13 |
| 87920-1430 | 87920-1464 | 87920-1468 | 14 | N | 4 | 17.78 | 15.24 | - | 12.69 | 11.69 | 8.13 |
| 87920-1437 | 87920-1471 | 87920-1475 | 14 | Y | 1 | 17.78 | 15.24 | 12.70 | 12.69 | 11.69 | 8.13 |
| 87920-1438 | 87920-1472 | 87920-1476 | 14 | Y | 2 | 17.78 | 15.24 | 12.70 | 12.69 | 11.69 | 8.13 |
| 87920-1439 | 87920-1473 | 87920-1477 | 14 | Y | 3 | 17.78 | 15.24 | 12.70 | 12.69 | 11.69 | 8.13 |
| 87920-1440 | 87920-1474 | 87920-1478 | 14 | Y | 4 | 17.78 | 15.24 | 12.70 | 12.69 | 11.69 | 8.13 |

| PART NUMBER IN PACKAGING OPTION | | | CKT SIZE | PEG | PLATE OPT. | DIMENSION | | | | | |
|---|---|---|---|---|---|---|---|---|---|---|---|
| W/O CAP IN TRAY | W/O CAP IN TUBE | WITH CAP IN TUBE | | | | A | B | C | G | F | M |
| 87920-1047 | 87920-1081 | 87920-1085 | 10 | N | 1 | 12.70 | 10.16 | - | 15.23 | 14.23 | 10.67 |
| 87920-1048 | 87920-1082 | 87920-1086 | 10 | N | 2 | 12.70 | 10.16 | - | 15.23 | 14.23 | 10.67 |
| 87920-1049 | 87920-1083 | 87920-1087 | 10 | N | 3 | 12.70 | 10.16 | - | 15.23 | 14.23 | 10.67 |
| 87920-1050 | 87920-1084 | 87920-1088 | 10 | N | 4 | 12.70 | 10.16 | - | 15.23 | 14.23 | 10.67 |
| 87920-1057 | 87920-1091 | 87920-1095 | 10 | Y | 1 | 12.70 | 10.16 | 7.62 | 15.23 | 14.23 | 10.67 |
| 87920-1058 | 87920-1092 | 87920-1096 | 10 | Y | 2 | 12.70 | 10.16 | 7.62 | 15.23 | 14.23 | 10.67 |
| 87920-1059 | 87920-1093 | 87920-1097 | 10 | Y | 3 | 12.70 | 10.16 | 7.62 | 15.23 | 14.23 | 10.67 |
| 87920-1060 | 87920-1094 | 87920-1098 | 10 | Y | 4 | 12.70 | 10.16 | 7.62 | 15.23 | 14.23 | 10.67 |
| | | | | | | | | | | | |
| 87920-1247 | 87920-1281 | 87920-1285 | 12 | N | 1 | 15.24 | 12.70 | - | 15.23 | 14.23 | 10.67 |
| 87920-1248 | 87920-1282 | 87920-1286 | 12 | N | 2 | 15.24 | 12.70 | - | 15.23 | 14.23 | 10.67 |
| 87920-1249 | 87920-1283 | 87920-1287 | 12 | N | 3 | 15.24 | 12.70 | - | 15.23 | 14.23 | 10.67 |
| 87920-1250 | 87920-1284 | 87920-1288 | 12 | N | 4 | 15.24 | 12.70 | - | 15.23 | 14.23 | 10.67 |
| 87920-1257 | 87920-1291 | 87920-1295 | 12 | Y | 1 | 15.24 | 12.70 | 10.16 | 15.23 | 14.23 | 10.67 |
| 87920-1258 | 87920-1292 | 87920-1296 | 12 | Y | 2 | 15.24 | 12.70 | 10.16 | 15.23 | 14.23 | 10.67 |
| 87920-1259 | 87920-1293 | 87920-1297 | 12 | Y | 3 | 15.24 | 12.70 | 10.16 | 15.23 | 14.23 | 10.67 |
| 87920-1260 | 87920-1294 | 87920-1298 | 12 | Y | 4 | 15.24 | 12.70 | 10.16 | 15.23 | 14.23 | 10.67 |
| | | | | | | | | | | | |
| 87920-1447 | 87920-1481 | 87920-1485 | 14 | N | 1 | 17.78 | 15.24 | - | 15.23 | 14.23 | 10.67 |
| 87920-1448 | 87920-1482 | 87920-1486 | 14 | N | 2 | 17.78 | 15.24 | - | 15.23 | 14.23 | 10.67 |
| 87920-1449 | 87920-1483 | 87920-1487 | 14 | N | 3 | 17.78 | 15.24 | - | 15.23 | 14.23 | 10.67 |
| 87920-1450 | 87920-1484 | 87920-1488 | 14 | N | 4 | 17.78 | 15.24 | - | 15.23 | 14.23 | 10.67 |
| 87920-1457 | 87920-1491 | 87920-1495 | 14 | Y | 1 | 17.78 | 15.24 | 12.70 | 15.23 | 14.23 | 10.67 |
| 87920-1458 | 87920-1492 | 87920-1496 | 14 | Y | 2 | 17.78 | 15.24 | 12.70 | 15.23 | 14.23 | 10.67 |
| 87920-1459 | 87920-1493 | 87920-1497 | 14 | Y | 3 | 17.78 | 15.24 | 12.70 | 15.23 | 14.23 | 10.67 |
| 87920-1460 | 87920-1494 | 87920-1498 | 14 | Y | 4 | 17.78 | 15.24 | 12.70 | 15.23 | 14.23 | 10.67 |

SEE SHT 2
EC NO: S2015-0282
DRWN:ATSEE 2014/09/23
CH'KD:FANNYWONG 2014/09/23
APPR:LBLEE 2014/10/09
A3

REV | DESCRIPTION

QUALITY SYMBOLS
FA=0
FC=0
FP=0

GENERAL TOLERANCES (UNLESS SPECIFIED)

| | mm | INCH |
|---|---|---|
| 4 PLACES | ± --- | ± --- |
| 3 PLACES | ± --- | ± --- |
| 2 PLACES | ± 0.2 | ± --- |
| 1 PLACE | ± --- | ± --- |
| ANGULAR ± 3 ° | | |

DRAFT WHERE APPLICABLE MUST REMAIN WITHIN DIMENSIONS

DIMENSION STYLE: MM ONLY
SCALE: NTS
DESIGN UNITS: METRIC
THIRD ANGLE PROJECTION

DRAWN BY: SKLIM01 DATE: 2006/10/09
CHECKED BY: CWLAM DATE: 2007/02/09
APPROVED BY: MLONG DATE: 2010/03/19

TITLE: CUSTOM HEADER 2.54MM PITCH DUAL ROW HEADER, SINGLE WAFER SMT

molex MOLEX INCORPORATED

MATERIAL NO.: SEE TABLE
DOCUMENT NO.: SD-87920-050
SHEET NO.: 4 OF 10
SIZE: A3

THIS DRAWING CONTAINS INFORMATION THAT IS PROPRIETARY TO MOLEX INCORPORATED AND SHOULD NOT BE USED WITHOUT WRITTEN PERMISSION

| PART NUMBER IN PACKAGING OPTION | | | CKT SIZE | PEG | PLATE OPT. | DIMENSION | | | | | |
|---|---|---|---|---|---|---|---|---|---|---|---|
| WITH CAP IN TAPE & REEL | W/O CAP IN TUBE | WITH CAP IN TUBE | | | | A | B | C | G | F | M |
| 87920-1627 | 87920-1661 | 87920-1665 | 16 | N | 1 | 20.32 | 17.78 | - | 12.69 | 11.69 | 8.13 |
| 87920-1628 | 87920-1662 | 87920-1666 | 16 | N | 2 | 20.32 | 17.78 | - | 12.69 | 11.69 | 8.13 |
| 87920-16629 | 87920-1663 | 87920-1667 | 16 | N | 3 | 20.32 | 17.78 | - | 12.69 | 11.69 | 8.13 |
| 87920-1630 | 87920-1664 | 87920-1668 | 16 | N | 4 | 20.32 | 17.78 | - | 12.69 | 11.69 | 8.13 |
| 87920-1637 | 87920-1671 | 87920-1675 | 16 | Y | 1 | 20.32 | 17.78 | 15.24 | 12.69 | 11.69 | 8.13 |
| 87920-1638 | 87920-1672 | 87920-1676 | 16 | Y | 2 | 20.32 | 17.78 | 15.24 | 12.69 | 11.69 | 8.13 |
| 87920-1639 | 87920-1673 | 87920-1677 | 16 | Y | 3 | 20.32 | 17.78 | 15.24 | 12.69 | 11.69 | 8.13 |
| 87920-1640 | 87920-1674 | 87920-1678 | 16 | Y | 4 | 20.32 | 17.78 | 15.24 | 12.69 | 11.69 | 8.13 |
| | | | | | | | | | | | |
| 87920-1827 | 87920-1861 | 87920-1865 | 18 | N | 1 | 22.86 | 20.32 | - | 12.69 | 11.69 | 8.13 |
| 87920-1828 | 87920-1862 | 87920-1866 | 18 | N | 2 | 22.86 | 20.32 | - | 12.69 | 11.69 | 8.13 |
| 87920-1829 | 87920-1863 | 87920-1867 | 18 | N | 3 | 22.86 | 20.32 | - | 12.69 | 11.69 | 8.13 |
| 87920-1830 | 87920-1864 | 87920-1868 | 18 | N | 4 | 22.86 | 20.32 | - | 12.69 | 11.69 | 8.13 |
| 87920-1837 | 87920-1871 | 87920-1875 | 18 | Y | 1 | 22.86 | 20.32 | 17.78 | 12.69 | 11.69 | 8.13 |
| 87920-1838 | 87920-1872 | 87920-1876 | 18 | Y | 2 | 22.86 | 20.32 | 17.78 | 12.69 | 11.69 | 8.13 |
| 87920-1839 | 87920-1873 | 87920-1877 | 18 | Y | 3 | 22.86 | 20.32 | 17.78 | 12.69 | 11.69 | 8.13 |
| 87920-1840 | 87920-1874 | 87920-1878 | 18 | Y | 4 | 22.86 | 20.32 | 17.78 | 12.69 | 11.69 | 8.13 |
| | | | | | | | | | | | |
| 87920-2027 | 87920-2061 | 87920-2065 | 20 | N | 1 | 25.40 | 22.86 | - | 12.69 | 11.69 | 8.13 |
| 87920-2028 | 87920-2062 | 87920-2066 | 20 | N | 2 | 25.40 | 22.86 | - | 12.69 | 11.69 | 8.13 |
| 87920-2029 | 87920-2063 | 87920-2067 | 20 | N | 3 | 25.40 | 22.86 | - | 12.69 | 11.69 | 8.13 |
| 87920-2030 | 87920-2064 | 87920-2068 | 20 | N | 4 | 25.40 | 22.86 | - | 12.69 | 11.69 | 8.13 |
| 87920-2037 | 87920-2071 | 87920-2075 | 20 | Y | 1 | 25.40 | 22.86 | 20.32 | 12.69 | 11.69 | 8.13 |
| 87920-2038 | 87920-2072 | 87920-2076 | 20 | Y | 2 | 25.40 | 22.86 | 20.32 | 12.69 | 11.69 | 8.13 |
| 87920-2039 | 87920-2073 | 87920-2077 | 20 | Y | 3 | 25.40 | 22.86 | 20.32 | 12.69 | 11.69 | 8.13 |
| 87920-2040 | 87920-2074 | 87920-2078 | 20 | Y | 4 | 25.40 | 22.86 | 20.32 | 12.69 | 11.69 | 8.13 |

| PART NUMBER IN PACKAGING OPTION | | | CKT SIZE | PEG | PLATE OPT. | DIMENSION | | | | | |
|---|---|---|---|---|---|---|---|---|---|---|---|
| W/O CAP IN TRAY | W/O CAP IN TUBE | WITH CAP IN TUBE | | | | A | B | C | G | F | M |
| 87920-1647 | 87920-1681 | 87920-1685 | 16 | N | 1 | 20.32 | 17.78 | - | 15.23 | 14.23 | 10.67 |
| 87920-1648 | 87920-1682 | 87920-1686 | 16 | N | 2 | 20.32 | 17.78 | - | 15.23 | 14.23 | 10.67 |
| 87920-1649 | 87920-1683 | 87920-1687 | 16 | N | 3 | 20.32 | 17.78 | - | 15.23 | 14.23 | 10.67 |
| 87920-1650 | 87920-1684 | 87920-1688 | 16 | N | 4 | 20.32 | 17.78 | - | 15.23 | 14.23 | 10.67 |
| 87920-1657 | 87920-1691 | 87920-1695 | 16 | Y | 1 | 20.32 | 17.78 | 15.24 | 15.23 | 14.23 | 10.67 |
| 87920-1658 | 87920-1692 | 87920-1696 | 16 | Y | 2 | 20.32 | 17.78 | 15.24 | 15.23 | 14.23 | 10.67 |
| 87920-1659 | 87920-1693 | 87920-1697 | 16 | Y | 3 | 20.32 | 17.78 | 15.24 | 15.23 | 14.23 | 10.67 |
| 87920-1660 | 87920-1694 | 87920-1698 | 16 | Y | 4 | 20.32 | 17.78 | 15.24 | 15.23 | 14.23 | 10.67 |
| | | | | | | | | | | | |
| 87920-1847 | 87920-1881 | 87920-1885 | 18 | N | 1 | 22.86 | 20.32 | - | 15.23 | 14.23 | 10.67 |
| 87920-1848 | 87920-1882 | 87920-1886 | 18 | N | 2 | 22.86 | 20.32 | - | 15.23 | 14.23 | 10.67 |
| 87920-1849 | 87920-1883 | 87920-1887 | 18 | N | 3 | 22.86 | 20.32 | - | 15.23 | 14.23 | 10.67 |
| 87920-1850 | 87920-1884 | 87920-1888 | 18 | N | 4 | 22.86 | 20.32 | - | 15.23 | 14.23 | 10.67 |
| 87920-1857 | 87920-1891 | 87920-1895 | 18 | Y | 1 | 22.86 | 20.32 | 17.78 | 15.23 | 14.23 | 10.67 |
| 87920-1858 | 87920-1892 | 87920-1896 | 18 | Y | 2 | 22.86 | 20.32 | 17.78 | 15.23 | 14.23 | 10.67 |
| 87920-1859 | 87920-1893 | 87920-1897 | 18 | Y | 3 | 22.86 | 20.32 | 17.78 | 15.23 | 14.23 | 10.67 |
| 87920-1860 | 87920-1894 | 87920-1898 | 18 | Y | 4 | 22.86 | 20.32 | 17.78 | 15.23 | 14.23 | 10.67 |
| | | | | | | | | | | | |
| 87920-2047 | 87920-2081 | 87920-2085 | 20 | N | 1 | 25.40 | 22.86 | - | 15.23 | 14.23 | 10.67 |
| 87920-2048 | 87920-2082 | 87920-2086 | 20 | N | 2 | 25.40 | 22.86 | - | 15.23 | 14.23 | 10.67 |
| 87920-2049 | 87920-2083 | 87920-2087 | 20 | N | 3 | 25.40 | 22.86 | - | 15.23 | 14.23 | 10.67 |
| 87920-2050 | 87920-2084 | 87920-2088 | 20 | N | 4 | 25.40 | 22.86 | - | 15.23 | 14.23 | 10.67 |
| 87920-2057 | 87920-2091 | 87920-2095 | 20 | Y | 1 | 25.40 | 22.86 | 20.32 | 15.23 | 14.23 | 10.67 |
| 87920-2058 | 87920-2092 | 87920-2096 | 20 | Y | 2 | 25.40 | 22.86 | 20.32 | 15.23 | 14.23 | 10.67 |
| 87920-2059 | 87920-2093 | 87920-2097 | 20 | Y | 3 | 25.40 | 22.86 | 20.32 | 15.23 | 14.23 | 10.67 |
| 87920-2060 | 87920-2094 | 87920-2098 | 20 | Y | 4 | 25.40 | 22.86 | 20.32 | 15.23 | 14.23 | 10.67 |

SEE SHT 2
EC NO: S2015-0282
DRWN:ATSEE 2014/09/23
CH'KD:FANNYWONG 2014/09/23
APPR:LBLEE 2014/10/09
A3

REV | DESCRIPTION

QUALITY SYMBOLS
FA=0
FC=0
FP=0

GENERAL TOLERANCES (UNLESS SPECIFIED)

| | mm | INCH |
|---|---|---|
| 4 PLACES | ± --- | ± --- |
| 3 PLACES | ± --- | ± --- |
| 2 PLACES | ± 0.2 | ± --- |
| 1 PLACE | ± --- | ± --- |
| ANGULAR ± 3 ° | | |

DRAFT WHERE APPLICABLE MUST REMAIN WITHIN DIMENSIONS

DIMENSION STYLE: MM ONLY
SCALE: NTS
DESIGN UNITS: METRIC
THIRD ANGLE PROJECTION

DRAWN BY: SKLIM01 DATE: 2006/10/09
CHECKED BY: CWLAM DATE: 2007/02/09
APPROVED BY: MLONG DATE: 2010/03/19

TITLE: CUSTOM HEADER 2.54MM PITCH DUAL ROW HEADER, SINGLE WAFER SMT

molex MOLEX INCORPORATED

MATERIAL NO.: SEE TABLE
DOCUMENT NO.: SD-87920-050
SHEET NO.: 5 OF 10
SIZE: A3

THIS DRAWING CONTAINS INFORMATION THAT IS PROPRIETARY TO MOLEX INCORPORATED AND SHOULD NOT BE USED WITHOUT WRITTEN PERMISSION

| PART NUMBER IN PACKAGING OPTION | | | CKT SIZE | PEG | PLATE OPT. | DIMENSION | | | | | |
|---|---|---|---|---|---|---|---|---|---|---|---|
| WITH CAP IN TAPE & REEL | W/O CAP IN TUBE | WITH CAP IN TUBE | | | | A | B | C | G | F | M |
| 87920-2227 | 87920-2261 | 87920-2265 | 22 | N | 1 | 27.94 | 25.40 | - | 12.69 | 11.69 | 8.13 |
| 87920-2228 | 87920-2262 | 87920-2266 | 22 | N | 2 | 27.94 | 25.40 | - | 12.69 | 11.69 | 8.13 |
| 87920-2229 | 87920-2263 | 87920-2267 | 22 | N | 3 | 27.94 | 25.40 | - | 12.69 | 11.69 | 8.13 |
| 87920-2230 | 87920-2264 | 87920-2268 | 22 | N | 4 | 27.94 | 25.40 | - | 12.69 | 11.69 | 8.13 |
| 87920-2237 | 87920-2271 | 87920-2275 | 22 | Y | 1 | 27.94 | 25.40 | 22.86 | 12.69 | 11.69 | 8.13 |
| 87920-2238 | 87920-2272 | 87920-2276 | 22 | Y | 2 | 27.94 | 25.40 | 22.86 | 12.69 | 11.69 | 8.13 |
| 87920-2239 | 87920-2273 | 87920-2277 | 22 | Y | 3 | 27.94 | 25.40 | 22.86 | 12.69 | 11.69 | 8.13 |
| 87920-2240 | 87920-2274 | 87920-2278 | 22 | Y | 4 | 27.94 | 25.40 | 22.86 | 12.69 | 11.69 | 8.13 |
| | | | | | | | | | | | |
| 87920-2427 | 87920-2461 | 87920-2465 | 24 | N | 1 | 30.48 | 27.94 | - | 12.69 | 11.69 | 8.13 |
| 87920-2428 | 87920-2462 | 87920-2466 | 24 | N | 2 | 30.48 | 27.94 | - | 12.69 | 11.69 | 8.13 |
| 87920-2429 | 87920-2463 | 87920-2467 | 24 | N | 3 | 30.48 | 27.94 | - | 12.69 | 11.69 | 8.13 |
| 87920-2430 | 87920-2464 | 87920-2468 | 24 | N | 4 | 30.48 | 27.94 | - | 12.69 | 11.69 | 8.13 |
| 87920-2437 | 87920-2471 | 87920-2475 | 24 | Y | 1 | 30.48 | 27.94 | 25.40 | 12.69 | 11.69 | 8.13 |
| 87920-2438 | 87920-2472 | 87920-2476 | 24 | Y | 2 | 30.48 | 27.94 | 25.40 | 12.69 | 11.69 | 8.13 |
| 87920-2439 | 87920-2473 | 87920-2477 | 24 | Y | 3 | 30.48 | 27.94 | 25.40 | 12.69 | 11.69 | 8.13 |
| 87920-2440 | 87920-2474 | 87920-2478 | 24 | Y | 4 | 30.48 | 27.94 | 25.40 | 12.69 | 11.69 | 8.13 |
| | | | | | | | | | | | |
| 87920-2627 | 87920-2661 | 87920-2665 | 26 | N | 1 | 33.02 | 30.48 | - | 12.69 | 11.69 | 8.13 |
| 87920-2628 | 87920-2662 | 87920-2666 | 26 | N | 2 | 33.02 | 30.48 | - | 12.69 | 11.69 | 8.13 |
| 87920-2629 | 87920-2663 | 87920-2667 | 26 | N | 3 | 33.02 | 30.48 | - | 12.69 | 11.69 | 8.13 |
| 87920-2630 | 87920-2664 | 87920-2668 | 26 | N | 4 | 33.02 | 30.48 | - | 12.69 | 11.69 | 8.13 |
| 87920-2637 | 87920-2671 | 87920-2675 | 26 | Y | 1 | 33.02 | 30.48 | 27.94 | 12.69 | 11.69 | 8.13 |
| 87920-2638 | 87920-2672 | 87920-2676 | 26 | Y | 2 | 33.02 | 30.48 | 27.94 | 12.69 | 11.69 | 8.13 |
| 87920-2639 | 87920-2673 | 87920-2677 | 26 | Y | 3 | 33.02 | 30.48 | 27.94 | 12.69 | 11.69 | 8.13 |
| 87920-2640 | 87920-2674 | 87920-2678 | 26 | Y | 4 | 33.02 | 30.48 | 27.94 | 12.69 | 11.69 | 8.13 |

| PART NUMBER IN PACKAGING OPTION | | | CKT SIZE | PEG | PLATE OPT. | DIMENSION | | | | | |
|---|---|---|---|---|---|---|---|---|---|---|---|
| W/O CAP IN TRAY | W/O CAP IN TUBE | WITH CAP IN TUBE | | | | A | B | C | G | F | M |
| 87920-2247 | 87920-2281 | 87920-2285 | 22 | N | 1 | 27.94 | 25.40 | - | 15.23 | 14.23 | 10.67 |
| 87920-2248 | 87920-2282 | 87920-2286 | 22 | N | 2 | 27.94 | 25.40 | - | 15.23 | 14.23 | 10.67 |
| 87920-2249 | 87920-2283 | 87920-2287 | 22 | N | 3 | 27.94 | 25.40 | - | 15.23 | 14.23 | 10.67 |
| 87920-2250 | 87920-2284 | 87920-2288 | 22 | N | 4 | 27.94 | 25.40 | - | 15.23 | 14.23 | 10.67 |
| 87920-2257 | 87920-2291 | 87920-2295 | 22 | Y | 1 | 27.94 | 25.40 | 22.86 | 15.23 | 14.23 | 10.67 |
| 87920-2258 | 87920-2292 | 87920-2296 | 22 | Y | 2 | 27.94 | 25.40 | 22.86 | 15.23 | 14.23 | 10.67 |
| 87920-2259 | 87920-2293 | 87920-2297 | 22 | Y | 3 | 27.94 | 25.40 | 22.86 | 15.23 | 14.23 | 10.67 |
| 87920-2260 | 87920-2294 | 87920-2298 | 22 | Y | 4 | 27.94 | 25.40 | 22.86 | 15.23 | 14.23 | 10.67 |
| | | | | | | | | | | | |
| 87920-2447 | 87920-2481 | 87920-2485 | 24 | N | 1 | 30.48 | 27.94 | - | 15.23 | 14.23 | 10.67 |
| 87920-2448 | 87920-2482 | 87920-2486 | 24 | N | 2 | 30.48 | 27.94 | - | 15.23 | 14.23 | 10.67 |
| 87920-2449 | 87920-2483 | 87920-2487 | 24 | N | 3 | 30.48 | 27.94 | - | 15.23 | 14.23 | 10.67 |
| 87920-2450 | 87920-2484 | 87920-2488 | 24 | N | 4 | 30.48 | 27.94 | - | 15.23 | 14.23 | 10.67 |
| 87920-2457 | 87920-2491 | 87920-2495 | 24 | Y | 1 | 30.48 | 27.94 | 25.40 | 15.23 | 14.23 | 10.67 |
| 87920-2458 | 87920-2492 | 87920-2496 | 24 | Y | 2 | 30.48 | 27.94 | 25.40 | 15.23 | 14.23 | 10.67 |
| 87920-2459 | 87920-2493 | 87920-2497 | 24 | Y | 3 | 30.48 | 27.94 | 25.40 | 15.23 | 14.23 | 10.67 |
| 87920-2460 | 87920-2494 | 87920-2498 | 24 | Y | 4 | 30.48 | 27.94 | 25.40 | 15.23 | 14.23 | 10.67 |
| | | | | | | | | | | | |
| 87920-2647 | 87920-2681 | 87920-2685 | 26 | N | 1 | 33.02 | 30.48 | - | 15.23 | 14.23 | 10.67 |
| 87920-2648 | 87920-2682 | 87920-2686 | 26 | N | 2 | 33.02 | 30.48 | - | 15.23 | 14.23 | 10.67 |
| 87920-2649 | 87920-2683 | 87920-2687 | 26 | N | 3 | 33.02 | 30.48 | - | 15.23 | 14.23 | 10.67 |
| 87920-2650 | 87920-2684 | 87920-2688 | 26 | N | 4 | 33.02 | 30.48 | - | 15.23 | 14.23 | 10.67 |
| 87920-2657 | 87920-2691 | 87920-2695 | 26 | Y | 1 | 33.02 | 30.48 | 27.94 | 15.23 | 14.23 | 10.67 |
| 87920-2658 | 87920-2692 | 87920-2696 | 26 | Y | 2 | 33.02 | 30.48 | 27.94 | 15.23 | 14.23 | 10.67 |
| 87920-2659 | 87920-2693 | 87920-2697 | 26 | Y | 3 | 33.02 | 30.48 | 27.94 | 15.23 | 14.23 | 10.67 |
| 87920-2660 | 87920-2694 | 87920-2698 | 26 | Y | 4 | 33.02 | 30.48 | 27.94 | 15.23 | 14.23 | 10.67 |

SEE SHT 2
EC NO: S2015-0282
DRWN:ATSEE 2014/09/23
CH'KD:FANNYWONG 2014/09/23
APPR:LBLEE 2014/10/09
A3

REV | DESCRIPTION

QUALITY SYMBOLS
FA=0
FC=0
FP=0

GENERAL TOLERANCES (UNLESS SPECIFIED)

| | mm | INCH |
|---|---|---|
| 4 PLACES | ± --- | ± --- |
| 3 PLACES | ± --- | ± --- |
| 2 PLACES | ± 0.2 | ± --- |
| 1 PLACE | ± --- | ± --- |
| ANGULAR ± 3 ° | | |

DRAFT WHERE APPLICABLE MUST REMAIN WITHIN DIMENSIONS

DIMENSION STYLE: MM ONLY
SCALE: NTS
DESIGN UNITS: METRIC
THIRD ANGLE PROJECTION

DRAWN BY: SKLIM01 DATE: 2006/10/09
CHECKED BY: CWLAM DATE: 2007/02/09
APPROVED BY: MLONG DATE: 2010/03/19

TITLE: CUSTOM HEADER 2.54MM PITCH DUAL ROW HEADER, SINGLE WAFER SMT

molex MOLEX INCORPORATED

MATERIAL NO.: SEE TABLE
DOCUMENT NO.: SD-87920-050
SHEET NO.: 6 OF 10
SIZE: A3

THIS DRAWING CONTAINS INFORMATION THAT IS PROPRIETARY TO MOLEX INCORPORATED AND SHOULD NOT BE USED WITHOUT WRITTEN PERMISSION

| PART NUMBER IN PACKAGING OPTION | | | CKT SIZE | PEG | PLATE OPT. | DIMENSION | | | | | |
|---|---|---|---|---|---|---|---|---|---|---|---|
| WITH CAP IN TAPE & REEL | W/O CAP IN TUBE | WITH CAP IN TUBE | | | | A | B | C | G | F | M |
| 87920-2827 | 87920-2861 | 87920-2865 | 28 | N | 1 | 35.56 | 33.02 | - | 12.69 | 11.69 | 8.13 |
| 87920-2828 | 87920-2862 | 87920-2866 | 28 | N | 2 | 35.56 | 33.02 | - | 12.69 | 11.69 | 8.13 |
| 87920-2829 | 87920-2863 | 87920-2867 | 28 | N | 3 | 35.56 | 33.02 | - | 12.69 | 11.69 | 8.13 |
| 87920-2830 | 87920-2864 | 87920-2868 | 28 | N | 4 | 35.56 | 33.02 | - | 12.69 | 11.69 | 8.13 |
| 87920-2837 | 87920-2871 | 87920-2875 | 28 | Y | 1 | 35.56 | 33.02 | 30.48 | 12.69 | 11.69 | 8.13 |
| 87920-2838 | 87920-2872 | 87920-2876 | 28 | Y | 2 | 35.56 | 33.02 | 30.48 | 12.69 | 11.69 | 8.13 |
| 87920-2839 | 87920-2873 | 87920-2877 | 28 | Y | 3 | 35.56 | 33.02 | 30.48 | 12.69 | 11.69 | 8.13 |
| 87920-2840 | 87920-2874 | 87920-2878 | 28 | Y | 4 | 35.56 | 33.02 | 30.48 | 12.69 | 11.69 | 8.13 |
| | | | | | | | | | | | |
| 87920-3027 | 87920-3061 | 87920-3065 | 30 | N | 1 | 38.10 | 35.56 | - | 12.69 | 11.69 | 8.13 |
| 87920-3028 | 87920-3062 | 87920-3066 | 30 | N | 2 | 38.10 | 35.56 | - | 12.69 | 11.69 | 8.13 |
| 87920-3029 | 87920-3063 | 87920-3067 | 30 | N | 3 | 38.10 | 35.56 | - | 12.69 | 11.69 | 8.13 |
| 87920-3030 | 87920-3064 | 87920-3068 | 30 | N | 4 | 38.10 | 35.56 | - | 12.69 | 11.69 | 8.13 |
| 87920-3037 | 87920-3071 | 87920-3075 | 30 | Y | 1 | 38.10 | 35.56 | 33.02 | 12.69 | 11.69 | 8.13 |
| 87920-3038 | 87920-3072 | 87920-3076 | 30 | Y | 2 | 38.10 | 35.56 | 33.02 | 12.69 | 11.69 | 8.13 |
| 87920-3039 | 87920-3073 | 87920-3077 | 30 | Y | 3 | 38.10 | 35.56 | 33.02 | 12.69 | 11.69 | 8.13 |
| 87920-3040 | 87920-3074 | 87920-3078 | 30 | Y | 4 | 38.10 | 35.56 | 33.02 | 12.69 | 11.69 | 8.13 |
| | | | | | | | | | | | |
| 87920-3227 | 87920-3261 | 87920-3265 | 32 | N | 1 | 40.64 | 38.10 | - | 12.69 | 11.69 | 8.13 |
| 87920-3228 | 87920-3262 | 87920-3266 | 32 | N | 2 | 40.64 | 38.10 | - | 12.69 | 11.69 | 8.13 |
| 87920-3229 | 87920-3263 | 87920-3267 | 32 | N | 3 | 40.64 | 38.10 | - | 12.69 | 11.69 | 8.13 |
| 87920-3230 | 87920-3264 | 87920-3268 | 32 | N | 4 | 40.64 | 38.10 | - | 12.69 | 11.69 | 8.13 |
| 87920-3237 | 87920-3271 | 87920-3275 | 32 | Y | 1 | 40.64 | 38.10 | 35.56 | 12.69 | 11.69 | 8.13 |
| 87920-3238 | 87920-3272 | 87920-3276 | 32 | Y | 2 | 40.64 | 38.10 | 35.56 | 12.69 | 11.69 | 8.13 |
| 87920-3239 | 87920-3273 | 87920-3277 | 32 | Y | 3 | 40.64 | 38.10 | 35.56 | 12.69 | 11.69 | 8.13 |
| 87920-3240 | 87920-3274 | 87920-3278 | 32 | Y | 4 | 40.64 | 38.10 | 35.56 | 12.69 | 11.69 | 8.13 |

| PART NUMBER IN PACKAGING OPTION | | | CKT SIZE | PEG | PLATE OPT. | DIMENSION | | | | | |
|---|---|---|---|---|---|---|---|---|---|---|---|
| W/O CAP IN TRAY | W/O CAP IN TUBE | WITH CAP IN TUBE | | | | A | B | C | G | F | M |
| 87920-2847 | 87920-2881 | 87920-2885 | 28 | N | 1 | 35.56 | 33.02 | - | 15.23 | 14.23 | 10.67 |
| 87920-2848 | 87920-2882 | 87920-2886 | 28 | N | 2 | 35.56 | 33.02 | - | 15.23 | 14.23 | 10.67 |
| 87920-2849 | 87920-2883 | 87920-2887 | 28 | N | 3 | 35.56 | 33.02 | - | 15.23 | 14.23 | 10.67 |
| 87920-2850 | 87920-2884 | 87920-2888 | 28 | N | 4 | 35.56 | 33.02 | - | 15.23 | 14.23 | 10.67 |
| 87920-2857 | 87920-2891 | 87920-2895 | 28 | Y | 1 | 35.56 | 33.02 | 30.48 | 15.23 | 14.23 | 10.67 |
| 87920-2858 | 87920-2892 | 87920-2896 | 28 | Y | 2 | 35.56 | 33.02 | 30.48 | 15.23 | 14.23 | 10.67 |
| 87920-2859 | 87920-2893 | 87920-2897 | 28 | Y | 3 | 35.56 | 33.02 | 30.48 | 15.23 | 14.23 | 10.67 |
| 87920-2860 | 87920-2894 | 87920-2898 | 28 | Y | 4 | 35.56 | 33.02 | 30.48 | 15.23 | 14.23 | 10.67 |
| | | | | | | | | | | | |
| 87920-3047 | 87920-3081 | 87920-3085 | 30 | N | 1 | 38.10 | 35.56 | - | 15.23 | 14.23 | 10.67 |
| 87920-3048 | 87920-3082 | 87920-3086 | 30 | N | 2 | 38.10 | 35.56 | - | 15.23 | 14.23 | 10.67 |
| 87920-3049 | 87920-3083 | 87920-3087 | 30 | N | 3 | 38.10 | 35.56 | - | 15.23 | 14.23 | 10.67 |
| 87920-3050 | 87920-3084 | 87920-3088 | 30 | N | 4 | 38.10 | 35.56 | - | 15.23 | 14.23 | 10.67 |
| 87920-3057 | 87920-3091 | 87920-3095 | 30 | Y | 1 | 38.10 | 35.56 | 33.02 | 15.23 | 14.23 | 10.67 |
| 87920-3058 | 87920-3092 | 87920-3096 | 30 | Y | 2 | 38.10 | 35.56 | 33.02 | 15.23 | 14.23 | 10.67 |
| 87920-3059 | 87920-3093 | 87920-3097 | 30 | Y | 3 | 38.10 | 35.56 | 33.02 | 15.23 | 14.23 | 10.67 |
| 87920-3060 | 87920-3094 | 87920-3098 | 30 | Y | 4 | 38.10 | 35.56 | 33.02 | 15.23 | 14.23 | 10.67 |
| | | | | | | | | | | | |
| 87920-3247 | 87920-3281 | 87920-3285 | 32 | N | 1 | 40.64 | 38.10 | - | 15.23 | 14.23 | 10.67 |
| 87920-3248 | 87920-3282 | 87920-3286 | 32 | N | 2 | 40.64 | 38.10 | - | 15.23 | 14.23 | 10.67 |
| 87920-3249 | 87920-3283 | 87920-3287 | 32 | N | 3 | 40.64 | 38.10 | - | 15.23 | 14.23 | 10.67 |
| 87920-3250 | 87920-3284 | 87920-3288 | 32 | N | 4 | 40.64 | 38.10 | - | 15.23 | 14.23 | 10.67 |
| 87920-3257 | 87920-3291 | 87920-3295 | 32 | Y | 1 | 40.64 | 38.10 | 35.56 | 15.23 | 14.23 | 10.67 |
| 87920-3258 | 87920-3292 | 87920-3296 | 32 | Y | 2 | 40.64 | 38.10 | 35.56 | 15.23 | 14.23 | 10.67 |
| 87920-3259 | 87920-3293 | 87920-3297 | 32 | Y | 3 | 40.64 | 38.10 | 35.56 | 15.23 | 14.23 | 10.67 |
| 87920-3260 | 87920-3294 | 87920-3298 | 32 | Y | 4 | 40.64 | 38.10 | 35.56 | 15.23 | 14.23 | 10.67 |

SEE SHT 2
EC NO: S2015-0282
DRWN:ATSEE 2014/09/23
CH'KD:FANNYWONG 2014/09/23
APPR:LBLEE 2014/10/09
A3

REV | DESCRIPTION

QUALITY SYMBOLS
FA=0
FC=0
FP=0

GENERAL TOLERANCES (UNLESS SPECIFIED)

| | mm | INCH |
|---|---|---|
| 4 PLACES | ± --- | ± --- |
| 3 PLACES | ± --- | ± --- |
| 2 PLACES | ± 0.2 | ± --- |
| 1 PLACE | ± --- | ± --- |
| ANGULAR ± 3 ° | | |

DRAFT WHERE APPLICABLE MUST REMAIN WITHIN DIMENSIONS

DIMENSION STYLE: MM ONLY
SCALE: NTS
DESIGN UNITS: METRIC
THIRD ANGLE PROJECTION

DRAWN BY: SKLIM01 DATE: 2006/10/09
CHECKED BY: CWLAM DATE: 2007/02/09
APPROVED BY: MLONG DATE: 2010/03/19

TITLE: CUSTOM HEADER 2.54MM PITCH DUAL ROW HEADER, SINGLE WAFER SMT

molex MOLEX INCORPORATED

MATERIAL NO.: SEE TABLE
DOCUMENT NO.: SD-87920-050
SHEET NO.: 7 OF 10
SIZE: A3

THIS DRAWING CONTAINS INFORMATION THAT IS PROPRIETARY TO MOLEX INCORPORATED AND SHOULD NOT BE USED WITHOUT WRITTEN PERMISSION

| PART NUMBER IN PACKAGING OPTION | | | CKT SIZE | PEG | PLATE OPT. | DIMENSION | | | | | |
|---|---|---|---|---|---|---|---|---|---|---|---|
| WITH CAP IN TAPE & REEL | W/O CAP IN TUBE | WITH CAP IN TUBE | | | | A | B | C | G | F | M |
| 87920-3427 | 87920-3461 | 87920-3465 | 34 | N | 1 | 43.18 | 40.64 | - | 12.69 | 11.69 | 8.13 |
| 87920-3428 | 87920-3462 | 87920-3466 | 34 | N | 2 | 43.18 | 40.64 | - | 12.69 | 11.69 | 8.13 |
| 87920-3429 | 87920-3463 | 87920-3467 | 34 | N | 3 | 43.18 | 40.64 | - | 12.69 | 11.69 | 8.13 |
| 87920-3430 | 87920-3464 | 87920-3468 | 34 | N | 4 | 43.18 | 40.64 | - | 12.69 | 11.69 | 8.13 |
| 87920-3437 | 87920-3471 | 87920-3475 | 34 | Y | 1 | 43.18 | 40.64 | 38.10 | 12.69 | 11.69 | 8.13 |
| 87920-3438 | 87920-3472 | 87920-3476 | 34 | Y | 2 | 43.18 | 40.64 | 38.10 | 12.69 | 11.69 | 8.13 |
| 87920-3439 | 87920-3473 | 87920-3477 | 34 | Y | 3 | 43.18 | 40.64 | 38.10 | 12.69 | 11.69 | 8.13 |
| 87920-3440 | 87920-3474 | 87920-3478 | 34 | Y | 4 | 43.18 | 40.64 | 38.10 | 12.69 | 11.69 | 8.13 |

| PART NUMBER IN PACKAGING OPTION | | | CKT SIZE | PEG | PLATE OPT. | DIMENSION | | | | | |
|---|---|---|---|---|---|---|---|---|---|---|---|
| W/O CAP IN TRAY | W/O CAP IN TUBE | WITH CAP IN TUBE | | | | A | B | C | G | F | M |
| 87920-3447 | 87920-3481 | 87920-3485 | 34 | N | 1 | 43.18 | 40.64 | - | 15.23 | 14.23 | 10.67 |
| 87920-3448 | 87920-3482 | 87920-3486 | 34 | N | 2 | 43.18 | 40.64 | - | 15.23 | 14.23 | 10.67 |
| 87920-3449 | 87920-3483 | 87920-3487 | 34 | N | 3 | 43.18 | 40.64 | - | 15.23 | 14.23 | 10.67 |
| 87920-3450 | 87920-3484 | 87920-3488 | 34 | N | 4 | 43.18 | 40.64 | - | 15.23 | 14.23 | 10.67 |
| 87920-3457 | 87920-3491 | 87920-3495 | 34 | Y | 1 | 43.18 | 40.64 | 38.10 | 15.23 | 14.23 | 10.67 |
| 87920-3458 | 87920-3492 | 87920-3496 | 34 | Y | 2 | 43.18 | 40.64 | 38.10 | 15.23 | 14.23 | 10.67 |
| 87920-3459 | 87920-3493 | 87920-3497 | 34 | Y | 3 | 43.18 | 40.64 | 38.10 | 15.23 | 14.23 | 10.67 |
| 87920-3460 | 87920-3494 | 87920-3498 | 34 | Y | 4 | 43.18 | 40.64 | 38.10 | 15.23 | 14.23 | 10.67 |

| PART NUMBER IN PACKAGING OPTION | | | CKT SIZE | PEG | PLATE OPT. | DIMENSION | | | | | |
|---|---|---|---|---|---|---|---|---|---|---|---|
| W/O CAP IN TRAY | W/O CAP IN TUBE | WITH CAP IN TUBE | | | | A | B | C | G | F | M |
| 87920-3627 | 87920-3661 | 87920-3665 | 36 | N | 1 | 45.72 | 43.18 | - | 12.69 | 11.69 | 8.13 |
| 87920-3628 | 87920-3662 | 87920-3666 | 36 | N | 2 | 45.72 | 43.18 | - | 12.69 | 11.69 | 8.13 |
| 87920-3629 | 87920-3663 | 87920-3667 | 36 | N | 3 | 45.72 | 43.18 | - | 12.69 | 11.69 | 8.13 |
| 87920-3630 | 87920-3664 | 87920-3668 | 36 | N | 4 | 45.72 | 43.18 | - | 12.69 | 11.69 | 8.13 |
| 87920-3637 | 87920-3671 | 87920-3675 | 36 | Y | 1 | 45.72 | 43.18 | 40.64 | 12.69 | 11.69 | 8.13 |
| 87920-3638 | 87920-3672 | 87920-3676 | 36 | Y | 2 | 45.72 | 43.18 | 40.64 | 12.69 | 11.69 | 8.13 |
| 87920-3639 | 87920-3673 | 87920-3677 | 36 | Y | 3 | 45.72 | 43.18 | 40.64 | 12.69 | 11.69 | 8.13 |
| 87920-3640 | 87920-3674 | 87920-3678 | 36 | Y | 4 | 45.72 | 43.18 | 40.64 | 12.69 | 11.69 | 8.13 |

| PART NUMBER IN PACKAGING OPTION | | | CKT SIZE | PEG | PLATE OPT. | DIMENSION | | | | | |
|---|---|---|---|---|---|---|---|---|---|---|---|
| W/O CAP IN TRAY | W/O CAP IN TUBE | WITH CAP IN TUBE | | | | A | B | C | G | F | M |
| 87920-3647 | 87920-3681 | 87920-3685 | 36 | N | 1 | 45.72 | 43.18 | - | 15.23 | 14.23 | 10.67 |
| 87920-3648 | 87920-3682 | 87920-3686 | 36 | N | 2 | 45.72 | 43.18 | - | 15.23 | 14.23 | 10.67 |
| 87920-3649 | 87920-3683 | 87920-3687 | 36 | N | 3 | 45.72 | 43.18 | - | 15.23 | 14.23 | 10.67 |
| 87920-3650 | 87920-3684 | 87920-3688 | 36 | N | 4 | 45.72 | 43.18 | - | 15.23 | 14.23 | 10.67 |
| 87920-3657 | 87920-3691 | 87920-3695 | 36 | Y | 1 | 45.72 | 43.18 | 40.64 | 15.23 | 14.23 | 10.67 |
| 87920-3658 | 87920-3692 | 87920-3696 | 36 | Y | 2 | 45.72 | 43.18 | 40.64 | 15.23 | 14.23 | 10.67 |
| 87920-3659 | 87920-3693 | 87920-3697 | 36 | Y | 3 | 45.72 | 43.18 | 40.64 | 15.23 | 14.23 | 10.67 |
| 87920-3660 | 87920-3694 | 87920-3698 | 36 | Y | 4 | 45.72 | 43.18 | 40.64 | 15.23 | 14.23 | 10.67 |

SEE SHT 2
EC NO: S2015-0282
DRWN:ATSEE 2014/09/23
CH'KD:FANNYWONG 2014/09/23
APPR:LBLEE 2014/10/09
A3

REV | DESCRIPTION

QUALITY SYMBOLS
F/A=0
F/C=0
F/P=0

GENERAL TOLERANCES (UNLESS SPECIFIED)

| | mm | INCH |
|---|---|---|
| 4 PLACES | ± --- | ± --- |
| 3 PLACES | ± --- | ± --- |
| 2 PLACES | ± 0.2 | ± --- |
| 1 PLACE | ± --- | ± --- |
| ANGULAR ± 3 ° | | |

DRAFT WHERE APPLICABLE MUST REMAIN WITHIN DIMENSIONS

DIMENSION STYLE: MM ONLY
SCALE: NTS
DESIGN UNITS: METRIC
THIRD ANGLE PROJECTION

DRAWN BY: SKLIM01 DATE: 2006/10/09
CHECKED BY: CWLAM DATE: 2007/02/09
APPROVED BY: MLONG DATE: 2010/03/19
MATERIAL NO.: SEE TABLE

TITLE: CUSTOM HEADER 2.54MM PITCH DUAL ROW HEADER, SINGLE WAFER SMT

molex MOLEX INCORPORATED

DOCUMENT NO.: SD-87920-050
SHEET NO.: 8 OF 10

SIZE: A3

THIS DRAWING CONTAINS INFORMATION THAT IS PROPRIETARY TO MOLEX INCORPORATED AND SHOULD NOT BE USED WITHOUT WRITTEN PERMISSION

| PART NUMBER IN PACKAGING OPTION | | | CKT SIZE | PEG | PLATE OPT. | DIMENSION | | | | | |
|---|---|---|---|---|---|---|---|---|---|---|---|
| W/O CAP IN TRAY | W/O CAP IN TUBE | WITH CAP IN TUBE | | | | A | B | C | G | F | M |
| 87920-3827 | 87920-3861 | 87920-3865 | 38 | N | 1 | 48.26 | 45.72 | - | 12.69 | 11.69 | 8.13 |
| 87920-3828 | 87920-3862 | 87920-3866 | 38 | N | 2 | 48.26 | 45.72 | - | 12.69 | 11.69 | 8.13 |
| 87920-3829 | 87920-3863 | 87920-3867 | 38 | N | 3 | 48.26 | 45.72 | - | 12.69 | 11.69 | 8.13 |
| 87920-3830 | 87920-3864 | 87920-3868 | 38 | N | 4 | 48.26 | 45.72 | - | 12.69 | 11.69 | 8.13 |
| 87920-3837 | 87920-3871 | 87920-3875 | 38 | Y | 1 | 48.26 | 45.72 | 43.18 | 12.69 | 11.69 | 8.13 |
| 87920-3838 | 87920-3872 | 87920-3876 | 38 | Y | 2 | 48.26 | 45.72 | 43.18 | 12.69 | 11.69 | 8.13 |
| 87920-3839 | 87920-3873 | 87920-3877 | 38 | Y | 3 | 48.26 | 45.72 | 43.18 | 12.69 | 11.69 | 8.13 |
| 87920-3840 | 87920-3874 | 87920-3878 | 38 | Y | 4 | 48.26 | 45.72 | 43.18 | 12.69 | 11.69 | 8.13 |
| | | | | | | | | | | | |
| 87920-4027 | 87920-4061 | 87920-4065 | 40 | N | 1 | 50.80 | 48.26 | - | 12.69 | 11.69 | 8.13 |
| 87920-4028 | 87920-4062 | 87920-4066 | 40 | N | 2 | 50.80 | 48.26 | - | 12.69 | 11.69 | 8.13 |
| 87920-4029 | 87920-4063 | 87920-4067 | 40 | N | 3 | 50.80 | 48.26 | - | 12.69 | 11.69 | 8.13 |
| 87920-4030 | 87920-4064 | 87920-4068 | 40 | N | 4 | 50.80 | 48.26 | - | 12.69 | 11.69 | 8.13 |
| 87920-4037 | 87920-4071 | 87920-4075 | 40 | Y | 1 | 50.80 | 48.26 | 45.72 | 12.69 | 11.69 | 8.13 |
| 87920-4038 | 87920-4072 | 87920-4076 | 40 | Y | 2 | 50.80 | 48.26 | 45.72 | 12.69 | 11.69 | 8.13 |
| 87920-4039 | 87920-4073 | 87920-4077 | 40 | Y | 3 | 50.80 | 48.26 | 45.72 | 12.69 | 11.69 | 8.13 |
| 87920-4040 | 87920-4074 | 87920-4078 | 40 | Y | 4 | 50.80 | 48.26 | 45.72 | 12.69 | 11.69 | 8.13 |
| | | | | | | | | | | | |

| PART NUMBER IN PACKAGING OPTION | | | CKT SIZE | PEG | PLATE OPT. | DIMENSION | | | | | |
|---|---|---|---|---|---|---|---|---|---|---|---|
| W/O CAP IN TRAY | W/O CAP IN TUBE | WITH CAP IN TUBE | | | | A | B | C | G | F | M |
| 87920-3847 | 87920-3881 | 87920-3885 | 38 | N | 1 | 48.26 | 45.72 | - | 15.23 | 14.23 | 10.67 |
| 87920-3848 | 87920-3882 | 87920-3886 | 38 | N | 2 | 48.26 | 45.72 | - | 15.23 | 14.23 | 10.67 |
| 87920-3849 | 87920-3883 | 87920-3887 | 38 | N | 3 | 48.26 | 45.72 | - | 15.23 | 14.23 | 10.67 |
| 87920-3850 | 87920-3884 | 87920-3888 | 38 | N | 4 | 48.26 | 45.72 | - | 15.23 | 14.23 | 10.67 |
| 87920-3857 | 87920-3891 | 87920-3895 | 38 | Y | 1 | 48.26 | 45.72 | 43.18 | 15.23 | 14.23 | 10.67 |
| 87920-3858 | 87920-3892 | 87920-3896 | 38 | Y | 2 | 48.26 | 45.72 | 43.18 | 15.23 | 14.23 | 10.67 |
| 87920-3859 | 87920-3893 | 87920-3897 | 38 | Y | 3 | 48.26 | 45.72 | 43.18 | 15.23 | 14.23 | 10.67 |
| 87920-3860 | 87920-3894 | 87920-3898 | 38 | Y | 4 | 48.26 | 45.72 | 43.18 | 15.23 | 14.23 | 10.67 |
| | | | | | | | | | | | |
| 87920-4047 | 87920-4081 | 87920-4085 | 40 | N | 1 | 50.80 | 48.26 | - | 15.23 | 14.23 | 10.67 |
| 87920-4048 | 87920-4082 | 87920-4086 | 40 | N | 2 | 50.80 | 48.26 | - | 15.23 | 14.23 | 10.67 |
| 87920-4049 | 87920-4083 | 87920-4087 | 40 | N | 3 | 50.80 | 48.26 | - | 15.23 | 14.23 | 10.67 |
| 87920-4050 | 87920-4084 | 87920-4088 | 40 | N | 4 | 50.80 | 48.26 | - | 15.23 | 14.23 | 10.67 |
| 87920-4057 | 87920-4091 | 87920-4095 | 40 | Y | 1 | 50.80 | 48.26 | 45.72 | 15.23 | 14.23 | 10.67 |
| 87920-4058 | 87920-4092 | 87920-4096 | 40 | Y | 2 | 50.80 | 48.26 | 45.72 | 15.23 | 14.23 | 10.67 |
| 87920-4059 | 87920-4093 | 87920-4097 | 40 | Y | 3 | 50.80 | 48.26 | 45.72 | 15.23 | 14.23 | 10.67 |
| 87920-4060 | 87920-4094 | 87920-4098 | 40 | Y | 4 | 50.80 | 48.26 | 45.72 | 15.23 | 14.23 | 10.67 |
| | | | | | | | | | | | |

SEE SHT 2
EC NO: S2015-0282
DRWN:ATSEE 2014/09/23
CH'KD:FANNYWONG 2014/09/23
APPR:LBLEE 2014/10/09
A3

REV | DESCRIPTION

QUALITY SYMBOLS
F_A=0
F_C=0
F_P=0

GENERAL TOLERANCES (UNLESS SPECIFIED)

| | mm | INCH |
|---|---|---|
| 4 PLACES | ± --- | ± --- |
| 3 PLACES | ± --- | ± --- |
| 2 PLACES | ± 0.2 | ± --- |
| 1 PLACE | ± --- | ± --- |
| ANGULAR ± 3 ° | | |

DRAFT WHERE APPLICABLE MUST REMAIN WITHIN DIMENSIONS

DIMENSION STYLE: MM ONLY
SCALE: NTS
DESIGN UNITS: METRIC
THIRD ANGLE PROJECTION

DRAWN BY: SKLIM01 DATE: 2006/10/09
CHECKED BY: CWLAM DATE: 2007/02/09
APPROVED BY: MLONG DATE: 2010/03/19
MATERIAL NO.: SEE TABLE

TITLE: CUSTOM HEADER 2.54MM PITCH DUAL ROW HEADER, SINGLE WAFER SMT

molex MOLEX INCORPORATED

DOCUMENT NO.: SD-87920-050
SHEET NO.: 9 OF 10

SIZE: A3

THIS DRAWING CONTAINS INFORMATION THAT IS PROPRIETARY TO MOLEX INCORPORATED AND SHOULD NOT BE USED WITHOUT WRITTEN PERMISSION

SPECIAL OPTION

| PART NUMBER IN PACKAGING OPTION | | CKT SIZE | PEG | PLATE OPT. | DIMENSION | | | | | | |
|---|---|---|---|---|---|---|---|---|---|---|---|
| | | | | | A | B | C | G | F | CKT LOCATION | |
| WITH CAP IN TAPE & REEL | WITH CAP IN TUBE | | | | | | | | | M = 10.67 | M = 0 |
| 87920-1201 | 87920-1202 | 12 | Y | 4 | 15.24 | 12.70 | 10.16 | 15.23 | 14.23 | 3, 4, 5, 6, 7, 8, 9, 10 | 1, 2, 11, 11, 12 |

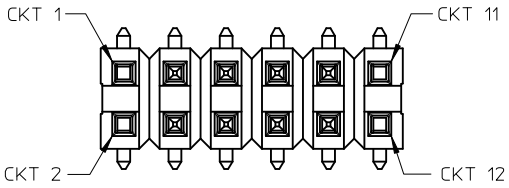


12 CKT WITH SPECIAL OPTION

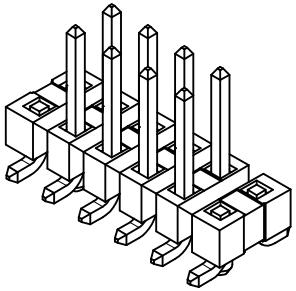

(PART WITHOUT CAP FOR ILLUSTRATION ONLY)

| | | | |
|---|---|---|---|
| SEE SHT 2 | EC NO: S2015-0282 | DRWN:ATSEE 2014/09/23 | CH'KD:FANNYWONG 2014/09/23 |
| APPR:LBLEE 2014/10/09 | DESCRIPTION | REV | |
| A3 | | | |

QUALITY SYMBOLS

$F_A$=0

$F_C$=0

$F_P$=0

GENERAL TOLERANCES (UNLESS SPECIFIED)

| | mm | INCH |
|---|---|---|
| 4 PLACES | ± --- | ± --- |
| 3 PLACES | ± --- | ± --- |
| 2 PLACES | ± 0.2 | ± --- |
| 1 PLACE | ± --- | ± --- |
| ANGULAR ± 3 ° | | |

DRAFT WHERE APPLICABLE MUST REMAIN WITHIN DIMENSIONS

| | | | |
|---|---|---|---|
| DIMENSION STYLE: MM ONLY | SCALE: NTS | DESIGN UNITS: METRIC | THIRD ANGLE PROJECTION |
| DRAWN BY: SKLIM01 | DATE: 2006/10/09 | TITLE: CUSTOM HEADER 2.54MM PITCH DUAL ROW HEADER, SINGLE WAFER SMT | |
| CHECKED BY: CWLAM | DATE: 2007/02/09 | | |
| APPROVED BY: MLONG | DATE: 2010/03/19 | molex MOLEX INCORPORATED | |
| MATERIAL NO.: SEE TABLE | | DOCUMENT NO.: SD-87920-050 | SHEET NO.: 10 OF 10 |
| SIZE: A3 | | | |

THIS DRAWING CONTAINS INFORMATION THAT IS PROPRIETARY TO MOLEX INCORPORATED AND SHOULD NOT BE USED WITHOUT WRITTEN PERMISSION