TABLE OF CONTENTS

SHEET NO.	SHEET DESCRIPTION
1	NOTES
2	1x2 BLADE SEALED ASSEMBLY KEYING CONFIGURATIONS
3	1x3 BLADE SEALED ASSEMBLY KEYING CONFIGURATIONS
4	CLIP-SLOT CONFIGURATIONS
5	BLADE SEALED ASSEMBLY
6	CONNECTION SYSTEM PACKAGING
7	WIRE DRESS COVER INTERFACE OPTIONS
8	1x2 BLADE SEALED ASSEMBLY BOM INTERFACE OPTION 1
9	1x2 BLADE SEALED ASSEMBLY BOM INTERFACE OPTION 2
10	1x3 BLADE SEALED ASSEMBLY BOM INTERFACE OPTION 1
11	1x3 BLADE SEALED ASSEMBLY BOM INTERFACE OPTION 2

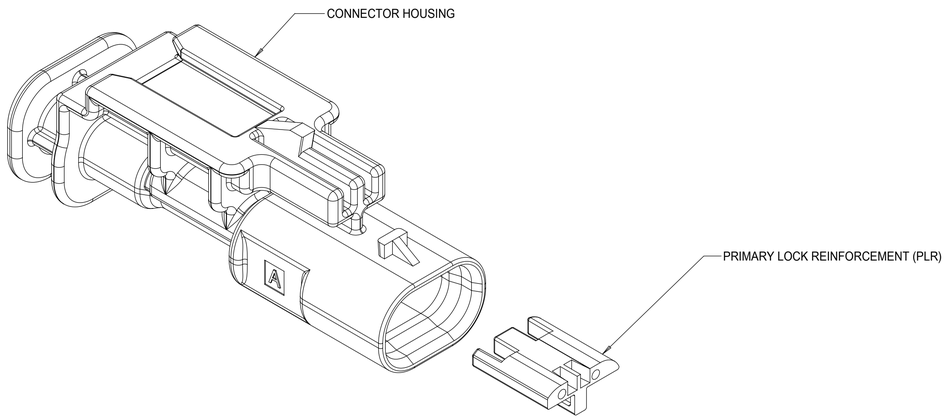

NOTES: VALID UNLESS OTHERWISE SPECIFIED

1. GENERAL:
a. APPLICATION SPECIFICATION SEE: AS-34900-0001
CONTAINS: PRODUCT INTRODUCTION, PRODUCT SUMMARY, CONNECTOR ASSEMBLY, PACKAGING INFORMATION, CONNECTOR MATING, SERVICE INSTRUCTIONS, ELECTRICAL CONTINUITY CHECKING, CRIMPING, AND TROUBLESHOOTING.
b. PRODUCT SPECIFICATION SEE: PS-34900-0001
CONTAINS: PRODUCT INTRODUCTION, PRODUCT SUMMARY, RATINGS (CURRENT, TEMPERATURE, SEALING, AND FLAMMABILITY), AND PRODUCT VALIDATION.
c. PACKAGING SPECIFICATION PER MOLEX DRAWING: PK-31301-898
d. PARTS MUST BE IN COMPLIANCE TO MOLEX CHEMICAL SUBSTANCES FOR PRODUCTS AND PACKAGING SPECIFICATION: ES-40000-5016
e. DATA MUST BE SUBMITTED UNDER THE MOLEX PART NUMBER TO IMDS (COMPANY ID#13255)

2. DESIGN - MATERIALS:
a. SEE BOM TABLE

3. DESIGN - GEOMETRY:
a. THIS IS A 100% CAD GENERATED PART. THE CAD MATHEMATICAL DATA IS THE MASTER FOR THIS PART. FOR DIMENSIONAL OR ANY INFORMATION NOT SHOWN ON THIS DRAWING, ANALYZE THE CAD MODEL.
b. GEOMETRIC DIMENSIONS AND TOLERANCES PER ASME Y14.5M - 1994
c. EDGES AND UNDIMENSIONED DETAILS PER ISO13715
d. CORNERS SHOWN AS SHARP TO BE R 0.2 MAX.
e. LETTERING SHALL BE 0.15 MAX RAISED IN 0.25 MAX RECESS PAD. THIS INCLUDES RECYCLING CODE, CAVITY ID, VENDOR IDENTIFICATION,
f. VISUAL DEFECTS SHALL MEET COSMETIC STANDARD PS-45499-002 (Class B)
g. LASER MARKING:
1. PART NUMBER
2. DAY OF THE YEAR
3. SHIFT
4. YEAR

REV	DESCRIPTION
A15	- NX-REMASTERING FROM MODEL MANAGER - 1x2 KEY C MOVED TO SALEABLE - 1X3 WDC INTERFACE 2 PART NUMBERS UPDATED TO MATCH E-DRAWING
A14	CORRECTED CHARTED DIMENSION 3 FOR 1X3 11MM CLIPSLOT
A13	1x3 KEY A&B SALEABLE (NON 40G)
A12	1X2 KEYS A&B W/ WDC SALEABLE
A11	CORRECTED REVISION LOG
A10	1X2,1X3 WIRE DRESS FEATURES OK TO TOOL
A9	1X2,1X3 PART # STATUS UPDATED
A8	1X2 40G CLIP-SLOT OK TO TOOL
A7	1X2,1X3 PART # UPDATED TO "TOOLED BUT NOT VALIDATED"
A6	ADDED 40G CLIP-SLOT PART NUMBERS
A5	BOM CORRECTIONS AND UPDATES
A4	BOM CORRECTIONS AND UPDATES
A3	1x2, 1x3 NON-SIR PART# OK TO TOOL
A2	ADDED 1x3 11mm CLIP-SLOT PART #
A	ADDED BLACK PART# AND MINOR BOM UPDATES
6	ADDED CLIP SLOT CONFIGURATIONS
5	1X3 BOM UPDATED
4	1X3 INLINE ASSY VIEWS ADDED
3	MINOR BOM CORRECTIONS
2	UPDATED PACKAGING DIMENSIONS
1	INITIAL RELEASE

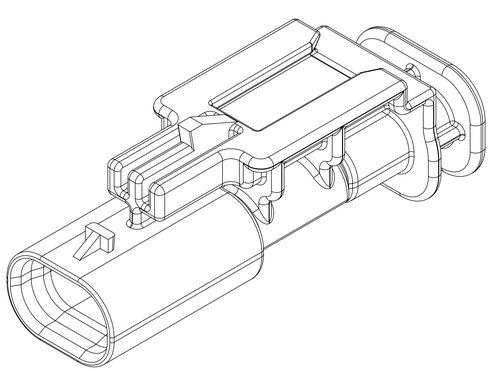

1x2 BLADE SEALED ASSEMBLY

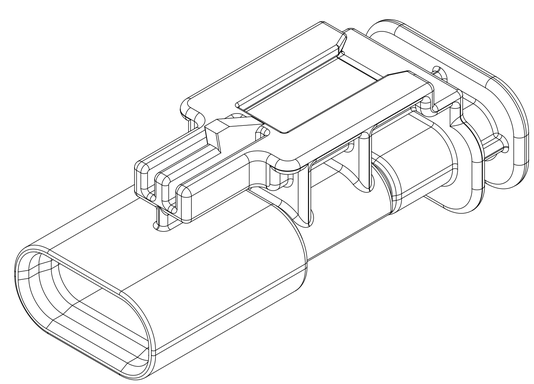

1x3 BLADE SEALED ASSEMBLY

INSPECTION NUMBER LOG
LAST NUMBER USED:
ADDED:
REMOVED:

QUALITY SYMBOLS
E A = 0
E C = 0
E D = 0
▼ = 0
C = 0
☒ = 0
■ = 0
E = 0

THIS DRAWING CONTAINS INFORMATION THAT IS PROPRIETARY TO MOLEX ELECTRONIC TECHNOLOGIES, LLC AND SHOULD NOT BE USED WITHOUT WRITTEN PERMISSION

EC NO: 117908 2017/04/11
DRWN: VYARAPPA 2017/06/22
CHK'D: KDEKOSKI
APPR:
REV A15

GENERAL TOLERANCES (UNLESS SPECIFIED)

ANGULAR TOL ± 3.0 °	
4 PLACES	±
3 PLACES	±
2 PLACES	± 0.1
1 PLACE	± 0.2
0 PLACES	± 0.5

DRAFT WHERE APPLICABLE MUST REMAIN WITHIN DIMENSIONS

DIMENSION UNITS: MM
SCALE: 4:1
DRWN BY: SKRAJENDRANA
DATE: 2013/11/06
CHK'D BY
DATE
APPR BY
DATE
DRAWING SIZE: D
THIRD ANGLE PROJECTION

molex®

1.2MM 1X2, 1X3 BLADE SEALED ASSEMBLY CABLE SEAL

PRODUCT CUSTOMER DRAWING

SERIES	MATERIAL NUMBER	CUSTOMER
34899	SEE BOM	GENERAL MARKET

DOCUMENT NUMBER	DOC TYPE	DOC PART	SHEET NUMBER
SD-34899-2001	PSD	001	1 OF 11

RELEASE STATUS	P1	RELEASE DATE	22.06.2017 19:25:24

FORMAT: molex-landscape
REVISION: C
DATE: 2015/04/08

1x2 BLADE SEALED ASSEMBLY KEYING CONFIGURATIONS. FOR PART NUMBERS REFER TO BOM SHEET.

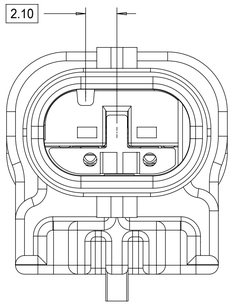

KEYING OPTION A

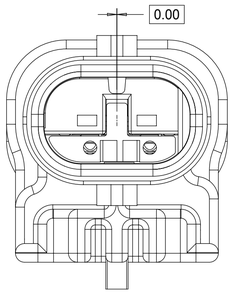

KEYING OPTION B

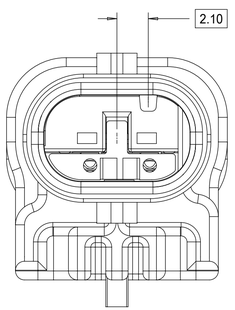

KEYING OPTION C

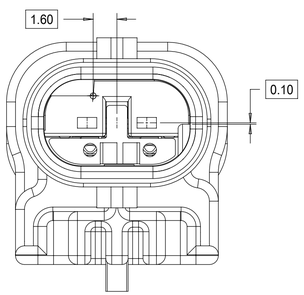

KEYING OPTION E

QUALITY SYMBOLS	
F A	= 0
F C	= 0
F D	= 0
▼	= 0
C	= 0
☒	= 0
■	= 0
G	= 0

THIS DRAWING CONTAINS INFORMATION THAT IS PROPRIETARY TO MOLEX ELECTRONIC TECHNOLOGIES, LLC AND SHOULD NOT BE USED WITHOUT WRITTEN PERMISSION

EC NO: 117908 — 2017/04/11
DRWN: VYARAPPA
CHK'D:
APPR: KDEKOSKI — 2017/06/22

REV: A15

GENERAL TOLERANCES (UNLESS SPECIFIED)

ANGULAR TOL	±	3.0 °
4 PLACES	±	
3 PLACES	±	
2 PLACES	±	0.1
1 PLACE	±	0.2
0 PLACES	±	0.5

DRAFT WHERE APPLICABLE MUST REMAIN WITHIN DIMENSIONS

DIMENSION UNITS: MM
SCALE: 5:1
DRWN BY: SKRAJENDRANA
DATE: 2013/11/06
CHK'D BY
DATE
APPR BY
DATE
DRAWING SIZE: D
THIRD ANGLE PROJECTION

molex®

1.2MM 1X2, 1X3 BLADE
SEALED ASSEMBLY CABLE SEAL

PRODUCT CUSTOMER DRAWING

SERIES	MATERIAL NUMBER	CUSTOMER
34899	SEE BOM	GENERAL MARKET

DOCUMENT NUMBER	DOC TYPE	DOC PART	SHEET NUMBER
SD-34899-2001	PSD	001	2 OF 11

RELEASE STATUS	P1	RELEASE DATE	22.06.2017 19:25:24

TEMPLATE: molex-Size-D.tmpl
DOCUMENT: 34899.dwg
DATE: 2017/06/06

1x3 BLADE SEALED ASSEMBLY KEYING CONFIGURATIONS. FOR PART NUMBERS REFER TO BOM SHEET.

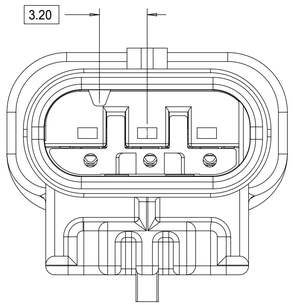

KEYING OPTION A

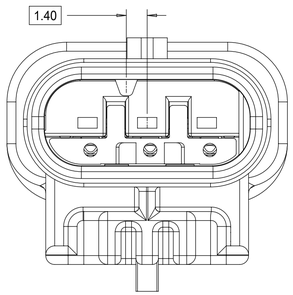

KEYING OPTION B

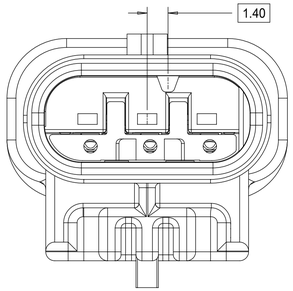

KEYING OPTION C

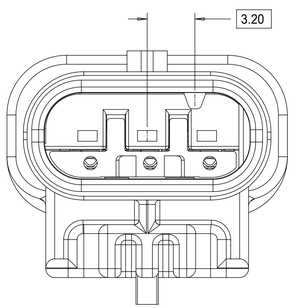

KEYING OPTION D

QUALITY SYMBOLS	
FA	= 0
FC	= 0
FP	= 0
▼	= 0
C	= 0
☒	= 0
■	= 0
S	= 0

THIS DRAWING CONTAINS INFORMATION THAT IS PROPRIETARY TO MOLEX ELECTRONIC TECHNOLOGIES, LLC AND SHOULD NOT BE USED WITHOUT WRITTEN PERMISSION

EC NO: 117908 2017/04/11
DRWN: VYARAPPA
CHK'D: KDEKOSKI 2017/06/22
APPR:

REV: A15

GENERAL TOLERANCES (UNLESS SPECIFIED)

ANGULAR TOL	±	3.0 °
4 PLACES	±	
3 PLACES	±	
2 PLACES	±	0.1
1 PLACE	±	0.2
0 PLACES	±	0.5

DRAFT WHERE APPLICABLE MUST REMAIN WITHIN DIMENSIONS

DIMENSION UNITS	MM
SCALE	5:1
DRWN BY	SKRAJENDRANA
DATE	2013/11/06
CHK'D BY	
DATE	
APPR BY	
DATE	
DRAWING SIZE	D
THIRD ANGLE PROJECTION	

molex®

1.2MM 1X2, 1X3 BLADE
SEALED ASSEMBLY CABLE SEAL

PRODUCT CUSTOMER DRAWING

SERIES	MATERIAL NUMBER	CUSTOMER
34899	SEE BOM	GENERAL MARKET

DOCUMENT NUMBER	DOC TYPE	DOC PART	SHEET NUMBER
SD-34899-2001	PSD	001	3 OF 11

RELEASE STATUS	P1	RELEASE DATE	22.06.2017 19:25:24

Creation date/time (d.m.y h:m:s)
REVISION: 01
DATE: 20110506

CLIP-SLOT CONFIGURATIONS. FOR PART NUMBERS REFER TO BOM SHEET.

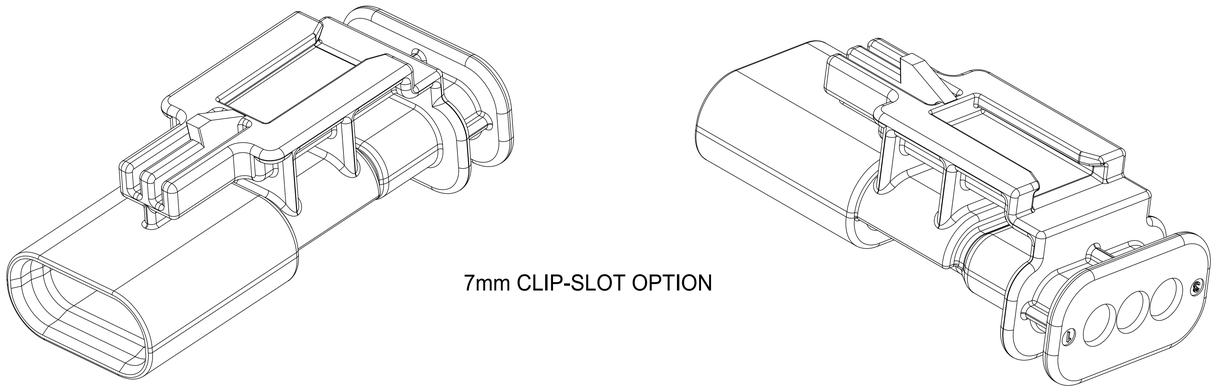

7mm CLIP-SLOT OPTION

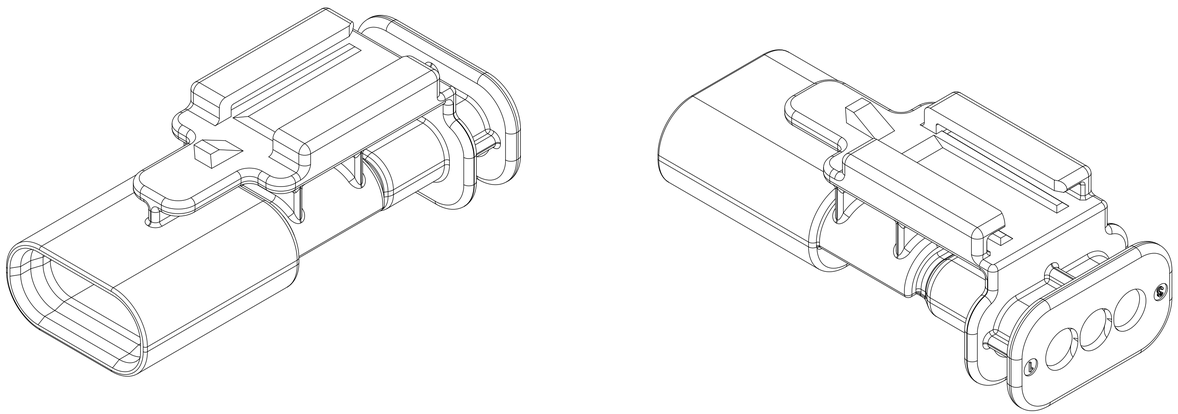

11mm CLIP-SLOT OPTION

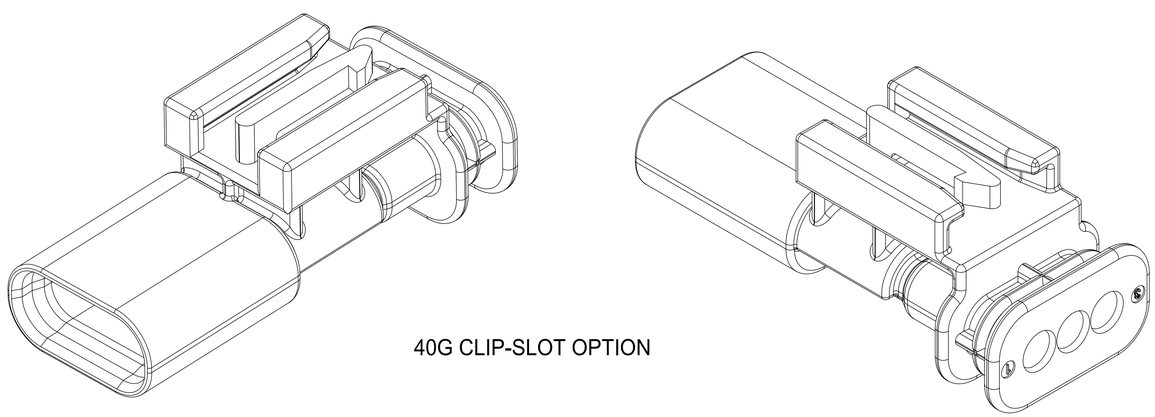

40G CLIP-SLOT OPTION

QUALITY SYMBOLS	THIS DRAWING CONTAINS INFORMATION THAT IS PROPRIETARY TO MOLEX ELECTRONIC TECHNOLOGIES, LLC AND SHOULD NOT BE USED WITHOUT WRITTEN PERMISSION		
= 0	EC NO: 117908 2017/04/11	GENERAL TOLERANCES (UNLESS SPECIFIED)	DIMENSION UNITS: MM; SCALE: 4:1
= 0	DRWN: VYARAPPA	ANGULAR TOL ± 3.0 °	DRWN BY: SKRAJENDRANA; DATE: 2013/11/06
= 0	CHK'D: KDEKOSKI 2017/06/22	4 PLACES ±	CHK'D BY: ; DATE:
= 0	APPR:	3 PLACES ±	
= 0		2 PLACES ± 0.1	APPR BY: ; DATE:
= 0		1 PLACE ± 0.2	
= 0		0 PLACES ± 0.5	DRAWING SIZE: D; THIRD ANGLE PROJECTION
= 0	REV: A15	DRAFT WHERE APPLICABLE MUST REMAIN WITHIN DIMENSIONS	

molex®

1.2MM 1X2, 1X3 BLADE
SEALED ASSEMBLY CABLE SEAL

PRODUCT CUSTOMER DRAWING

SERIES	MATERIAL NUMBER	CUSTOMER
34899	SEE BOM	GENERAL MARKET

DOCUMENT NUMBER	DOC TYPE	DOC PART	SHEET NUMBER
SD-34899-2001	PSD	001	4 OF 11

RELEASE STATUS	P1	RELEASE DATE	22.06.2017 19:25:24

TEMPLATE: 000000-00-00-0000-01
REVISION: 01
DATE: 2017-04-06

BLADE SEALED ASSEMBLY

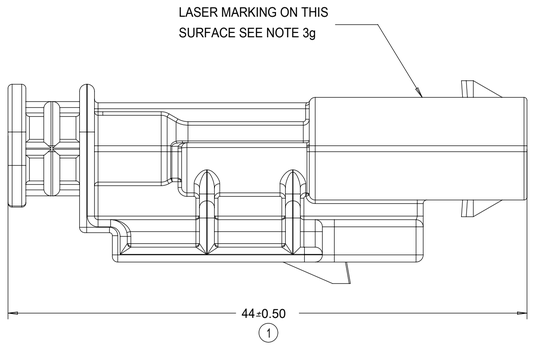

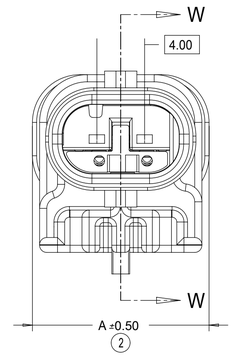

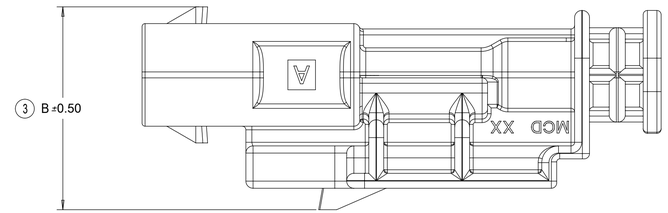

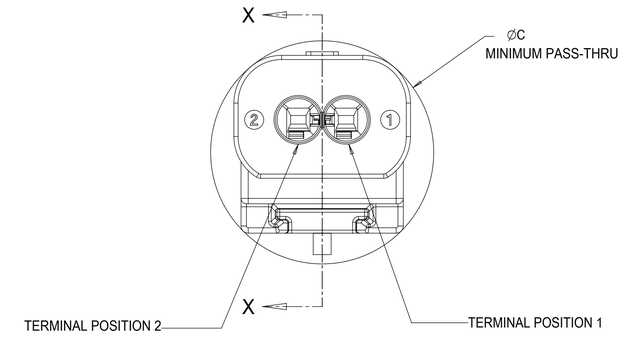

REAR VIEW
(WIRE HARNESS SIDE)

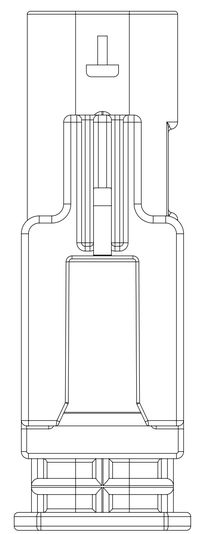

1x3 BLADE SEALED ASSEMBLY, 40G CLIP SLOT	19	16.75	21.75
1x3 BLADE SEALED ASSEMBLY, 11mm CLIP SLOT	19	14.6	20.75
1x3 BLADE SEALED ASSEMBLY, 7mm CLIP SLOT	19	17	20.5
1x2 BLADE SEALED ASSEMBLY, 40G CLIP SLOT	15	16.75	20.25
1x2 BLADE SEALED ASSEMBLY, 11mm CLIP SLOT	15	15.5	19
1x2 BLADE SEALED ASSEMBLY, 7mm CLIP SLOT	15	17	18.75
CONFIGURATION	A	B	C

CHARTED DIMENSIONS

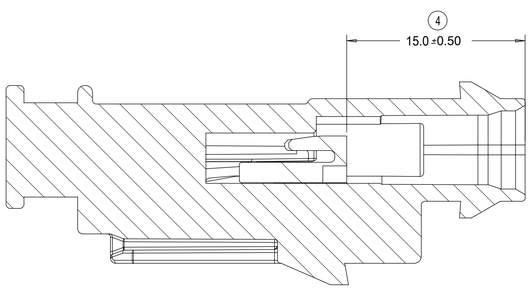

PRIMARY LOCK REINFORCEMENT (PLR) SHOWN
IN THE PRE-STAGED POSITION

SECTION W-W

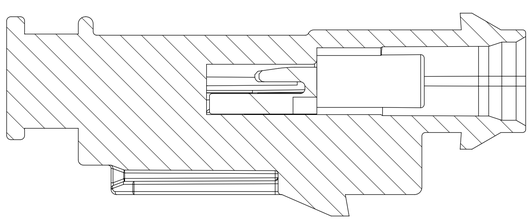

PRIMARY LOCK REINFORCEMENT (PLR) SHOWN
IN THE FINAL-LOCK POSITION

SECTION X-X

QUALITY SYMBOLS: = 0 / = 0 / = 0 / = 0 / = 0 / = 0 / = 0 / = 0

THIS DRAWING CONTAINS INFORMATION THAT IS PROPRIETARY TO MOLEX ELECTRONIC TECHNOLOGIES, LLC AND SHOULD NOT BE USED WITHOUT WRITTEN PERMISSION

EC NO: 117908 — DRWN: VYARAPPA 2017/04/11 — CHK'D: — APPR: KDEKOSKI 2017/06/22

REV: A15

GENERAL TOLERANCES (UNLESS SPECIFIED)

ANGULAR TOL ±	3.0	°
4 PLACES	±	
3 PLACES	±	
2 PLACES	±	0.1
1 PLACE	±	0.2
0 PLACES	±	0.5

DRAFT WHERE APPLICABLE MUST REMAIN WITHIN DIMENSIONS

DIMENSION UNITS: MM — SCALE: 4:1

DRWN BY: SKRAJENDRANA — DATE: 2013/11/06

CHK'D BY — DATE

APPR BY — DATE

DRAWING SIZE: D — THIRD ANGLE PROJECTION

molex®

1.2MM 1X2, 1X3 BLADE
SEALED ASSEMBLY CABLE SEAL

PRODUCT CUSTOMER DRAWING

SERIES	MATERIAL NUMBER	CUSTOMER
34899	SEE BOM	GENERAL MARKET

DOCUMENT NUMBER	DOC TYPE	DOC PART	SHEET NUMBER
SD-34899-2001	PSD	001	5 OF 11

RELEASE STATUS	P1	RELEASE DATE	22.06.2017 19:25:24

FORMAT: 11X8.5 SIZE D
REVISION: D
DATE: 2017/06/06

CONNECTION SYSTEM PACKAGING

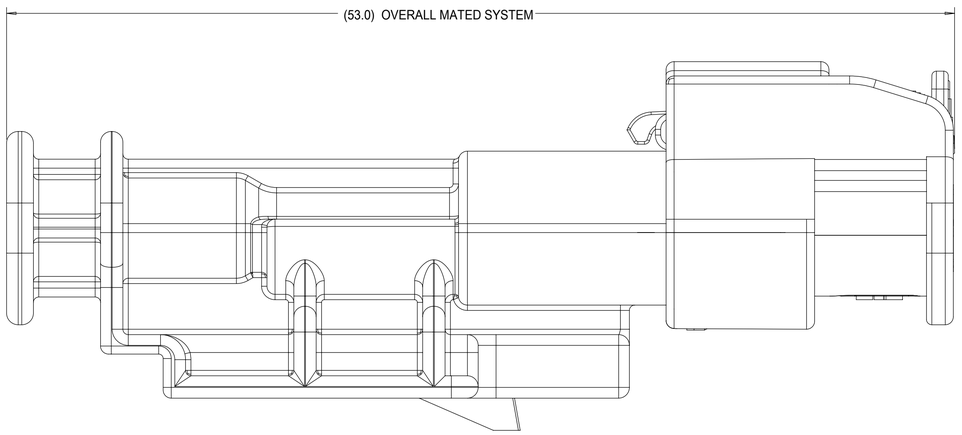

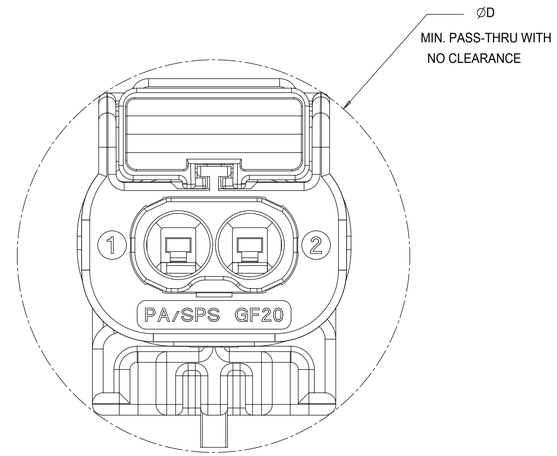

1x3 RECEPTACLE MATED TO 1x3 BLADE, 40 CLIP SLOT	TBD
1x3 RECEPTACLE MATED TO 1x3 BLADE, 11mm CLIP SLOT	24.0
1x3 RECEPTACLE MATED TO 1x3 BLADE, 7mm CLIP SLOT	23.0
1x2 RECEPTACLE MATED TO 1x2 BLADE, 40G CLIP SLOT	23.0
1x2 RECEPTACLE MATED TO 1x2 BLADE, 11mm CLIP SLOT	23.0
1x2 RECEPTACLE MATED TO 1x2 BLADE, 7mm CLIP SLOT	23.0
1.2mm CONNECTION SYSTEM CONFIGURATION	D

CHARTED DIMENSIONS

THIS DRAWING CONTAINS INFORMATION THAT IS PROPRIETARY TO MOLEX ELECTRONIC TECHNOLOGIES, LLC AND SHOULD NOT BE USED WITHOUT WRITTEN PERMISSION

QUALITY SYMBOLS
A = 0
E = 0
B = 0
▼ = 0
C = 0
☒ = 0
■ = 0
◇ = 0

EC NO: 117908
DRWN: VYARAPPA 2017/04/11
CHK'D: KDEKOSKI 2017/06/22
APPR:
REV A15

GENERAL TOLERANCES (UNLESS SPECIFIED)

ANGULAR TOL	±	3.0 °
4 PLACES	±	
3 PLACES	±	
2 PLACES	±	0.1
1 PLACE	±	0.2
0 PLACES	±	0.5

DRAFT WHERE APPLICABLE MUST REMAIN WITHIN DIMENSIONS

DIMENSION UNITS: MM
SCALE: 6:1
DRWN BY: SKRAJENDRANA DATE: 2013/11/06
CHK'D BY DATE
APPR BY DATE
DRAWING SIZE: D
THIRD ANGLE PROJECTION

molex®

1.2MM 1X2, 1X3 BLADE
SEALED ASSEMBLY CABLE SEAL

PRODUCT CUSTOMER DRAWING

SERIES	MATERIAL NUMBER	CUSTOMER
34899	SEE BOM	GENERAL MARKET

DOCUMENT NUMBER	DOC TYPE	DOC PART	SHEET NUMBER
SD-34899-2001	PSD	001	6 OF 11

RELEASE STATUS	P1	RELEASE DATE	22.06.2017 19:25:24

FORMAT: master-tb-prod-D
DESIGN: 0.1
DATE: 20-Oct-2016

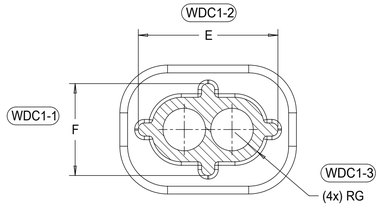

SECTION Z-Z

3 CIRCUIT	18.8	10.8	5.4	15.7	7.7	2.45
2 CIRCUIT	14.8	10.8	5.4	11.7	7.7	2.45
CONFIGURATION	A	B	C	E	F	G
CHARTED DIMENSIONS						

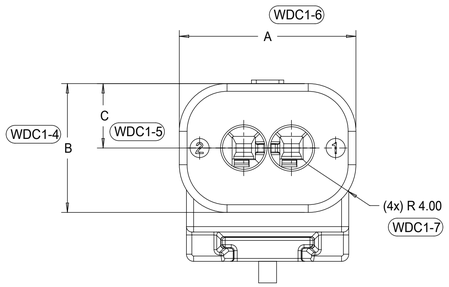

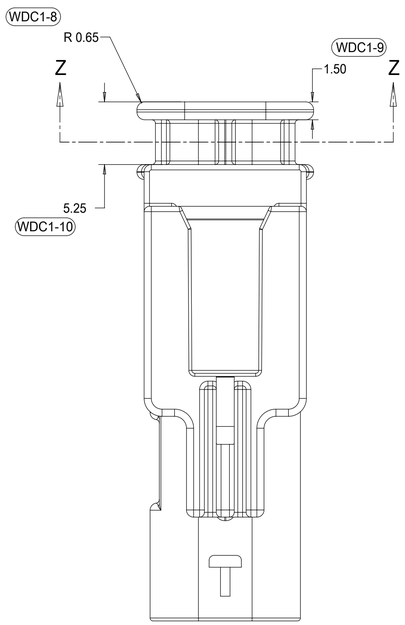

WIRE DRESS COVER
INTERFACE OPTION 1
WIRE DRESS COVERS
NOT AVAILABLE

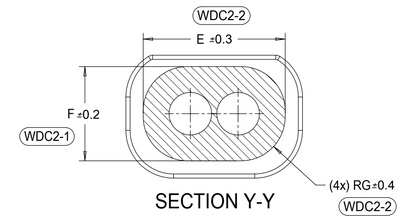

SECTION Y-Y

3 CIRCUIT	18.8	10.8	5.4	15.9	7.9	3.7
2 CIRCUIT	14.8	10.3	5.4	11.9	7.9	3.7
CONFIGURATION	A	B	C	E	F	G
CHARTED DIMENSIONS						

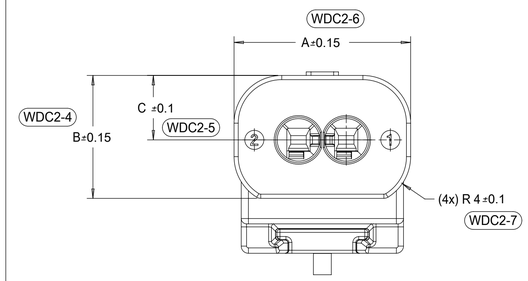

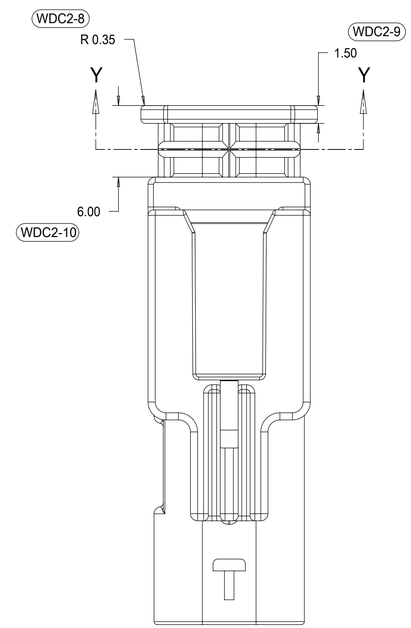

WIRE DRESS COVER
INTERFACE OPTION 2
BASED ON HIRSCHMANN INTERFACE
DRAWING 808-012-xxx REV B5

RELEASE STATUS	P1	RELEASE DATE	22.06.2017 19:25:24

QUALITY SYMBOLS
= 0
= 0
= 0
= 0
= 0
= 0
= 0
= 0

THIS DRAWING CONTAINS INFORMATION THAT IS PROPRIETARY TO MOLEX ELECTRONIC TECHNOLOGIES, LLC AND SHOULD NOT BE USED WITHOUT WRITTEN PERMISSION

EC NO: 117908 2017/04/11
DRWN: VYARAPPA
CHK'D: KDEKOSKI 2017/06/22
APPR:
REV A15

GENERAL TOLERANCES (UNLESS SPECIFIED)
ANGULAR TOL ± 3.0 °
4 PLACES ±
3 PLACES ±
2 PLACES ± 0.1
1 PLACE ± 0.2
0 PLACES ± 0.5
DRAFT WHERE APPLICABLE MUST REMAIN WITHIN DIMENSIONS

DIMENSION UNITS: MM
SCALE: 4:1
DRWN BY: SKRAJENDRANA
DATE: 2013/11/06
CHK'D BY
DATE
APPR BY
DATE
DRAWING SIZE: D
THIRD ANGLE PROJECTION

molex®

1.2MM 1X2, 1X3 BLADE
SEALED ASSEMBLY CABLE SEAL

PRODUCT CUSTOMER DRAWING

SERIES	MATERIAL NUMBER	CUSTOMER
34899	SEE TABLE	GENERAL MARKET

DOCUMENT NUMBER	DOC TYPE	DOC PART	SHEET NUMBER
SD-34899-2001	PSD	001	7 OF 11

1x2 BLADE SEALED ASSEMBLY BOM
FOR WIRE DRESS COVER INTERFACE 1
REFER WIRE DRESS COVER INTERFACE SHEET
FOR DETAILS

ASSEMBLY DESCRIPTION	ASSEMBLY PART NUMBER	WIRE DRESS COVER INTERFACE OPTION																	PRODUCTION TOOL STATUS	COMMENTS
KEYING OPTION E, 11mm CLIP SLOT, STONE GRAY	34899-2043	1																E	CONCEPT	
KEYING OPTION C, 11mm CLIP SLOT, DARK GRAY	34899-2042	1															C		CONCEPT	
KEYING OPTION B, 11mm CLIP SLOT, LIGHT GRAY	34899-2041	1														B			CONCEPT	
KEYING OPTION A, 11mm CLIP SLOT, BLACK	34899-2040	1													A				CONCEPT	
KEYING OPTION E, 11mm CLIP SLOT, YELLOW	34899-2033	1												E					CONCEPT	
KEYING OPTION C, 11mm CLIP SLOT, YELLOW	34899-2032	1											C						CONCEPT	
KEYING OPTION B, 11mm CLIP SLOT, YELLOW	34899-2031	1										B							CONCEPT	
KEYING OPTION A, 11mm CLIP SLOT, YELLOW	34899-2030	1									A								CONCEPT	
KEYING OPTION E, 7mm CLIP SLOT, STONE GRAY	34899-2023	1								E									TOOLED BUT NOT VALIDATED	
KEYING OPTION C, 7mm CLIP SLOT, DARK GRAY	34899-2022	1							C										SALEABLE	
KEYING OPTION B, 7mm CLIP SLOT, LIGHT GRAY	34899-2021	1						B											SALEABLE	
KEYING OPTION A, 7mm CLIP SLOT, BLACK	34899-2020	1					A												SALEABLE	
KEYING OPTION E, 7mm CLIP SLOT, YELLOW	34899-2013	1				E													TOOLED BUT NOT VALIDATED	
KEYING OPTION C, 7mm CLIP SLOT, YELLOW	34899-2012	1			C														SALEABLE	
KEYING OPTION B, 7mm CLIP SLOT, YELLOW	34899-2011	1		B															SALEABLE	
KEYING OPTION A, 7mm CLIP SLOT, YELLOW	34899-2010	1	A																SALEABLE	

DESCRIPTION	COLOR	MATERIAL
PLR	NATURAL	SPS/NYLON GF20
1x2 CONNECTOR HOUSING, KEYING OPTION E 11mm CLIP SLOT	STONE GRAY	SPS/NYLON GF20
1x2 CONNECTOR HOUSING, KEYING OPTION C 11mm CLIP SLOT	DARK GRAY	SPS/NYLON GF20
1x2 CONNECTOR HOUSING, KEYING OPTION B 11mm CLIP SLOT	LIGHT GRAY	SPS/NYLON GF20
1x2 CONNECTOR HOUSING, KEYING OPTION A 11mm CLIP SLOT	BLACK	SPS/NYLON GF20
1x2 CONNECTOR HOUSING, KEYING OPTION E 11mm CLIP SLOT	YELLOW	SPS/NYLON GF20
1x2 CONNECTOR HOUSING, KEYING OPTION C 11mm CLIP SLOT	YELLOW	SPS/NYLON GF20
1x2 CONNECTOR HOUSING, KEYING OPTION B 11mm CLIP SLOT	YELLOW	SPS/NYLON GF20
1x2 CONNECTOR HOUSING, KEYING OPTION A 11mm CLIP SLOT	YELLOW	SPS/NYLON GF20
1x2 CONNECTOR HOUSING, KEYING OPTION E 7mm CLIP SLOT	STONE GRAY	SPS/NYLON GF20
1x2 CONNECTOR HOUSING, KEYING OPTION C 7mm CLIP SLOT	DARK GRAY	SPS/NYLON GF20
1x2 CONNECTOR HOUSING, KEYING OPTION B 7mm CLIP SLOT	LIGHT GRAY	SPS/NYLON GF20
1x2 CONNECTOR HOUSING, KEYING OPTION A 7mm CLIP SLOT	BLACK	SPS/NYLON GF20
1x2 CONNECTOR HOUSING, KEYING OPTION E 7mm CLIP SLOT	YELLOW	SPS/NYLON GF20
1x2 CONNECTOR HOUSING, KEYING OPTION C 7mm CLIP SLOT	YELLOW	SPS/NYLON GF20
1x2 CONNECTOR HOUSING, KEYING OPTION B 7mm CLIP SLOT	YELLOW	SPS/NYLON GF20
1x2 CONNECTOR HOUSING, KEYING OPTION A 7mm CLIP SLOT	YELLOW	SPS/NYLON GF20

BOM/APPLICABLE COMPONENTS TABLE

LEGEND TABLE

ABREVIATION	COMPONENT
A	CONNECTOR HOUSING KEYING OPTION A
B	CONNECTOR HOUSING KEYING OPTION B
C	CONNECTOR HOUSING KEYING OPTION C
E	CONNECTOR HOUSING KEYING OPTION E

QUALITY SYMBOLS
= 0
= 0
= 0
= 0
= 0
= 0
= 0
= 0
= 0

THIS DRAWING CONTAINS INFORMATION THAT IS PROPRIETARY TO MOLEX ELECTRONIC TECHNOLOGIES, LLC AND SHOULD NOT BE USED WITHOUT WRITTEN PERMISSION

EC NO: 117908
DRWN: VYARAPPA 2017/04/11
CHK'D: KDEKOSKI 2017/06/22
APPR:
REV A15

GENERAL TOLERANCES (UNLESS SPECIFIED)
ANGULAR TOL ± 3.0 °
4 PLACES ±
3 PLACES ±
2 PLACES ± 0.1
1 PLACE ± 0.2
0 PLACES ± 0.5
DRAFT WHERE APPLICABLE MUST REMAIN WITHIN DIMENSIONS

DIMENSION UNITS: MM
SCALE: 2:1
DRWN BY: SKRAJENDRANA DATE: 2013/11/06
CHK'D BY DATE
APPR BY DATE
DRAWING SIZE: D
THIRD ANGLE PROJECTION

molex®

1.2MM 1X2, 1X3 BLADE
SEALED ASSEMBLY CABLE SEAL

PRODUCT CUSTOMER DRAWING

SERIES	MATERIAL NUMBER	CUSTOMER
34899	SEE BOM	GENERAL MARKET

DOCUMENT NUMBER	DOC TYPE	DOC PART	SHEET NUMBER
SD-34899-2001	PSD	001	8 OF 11

RELEASE STATUS	P1	RELEASE DATE	22.06.2017 19:25:24

FORMAT: model-fit-print
REVISION: 15
DATE: 2017/06/06

1x2 BLADE SEALED ASSEMBLY BOM
FOR WIRE DRESS COVER INTERFACE 2
REFER WIRE DRESS COVER INTERFACE SHEET
FOR DETAILS

ASSEMBLY DESCRIPTION	ASSEMBLY PART NUMBER	WIRE DRESS COVER INTERFACE OPTION											PRODUCTION TOOL STATUS	COMMENTS
KEYING OPTION A, 40G CLIP SLOT, BLACK	34899-2060	2										A	OK TO TOOL	
KEYING OPTION A, 40G CLIP SLOT, YELLOW	34899-2050	2									A		OK TO TOOL	
KEYING OPTION E, 7mm CLIP SLOT, STONE GRAY	34899-2083	2								E			OK TO TOOL	
KEYING OPTION C, 7mm CLIP SLOT, DARK GRAY	34899-2082	2							C				SALEABLE	
KEYING OPTION B, 7mm CLIP SLOT, LIGHT GRAY	34899-2081	2						B					SALEABLE	
KEYING OPTION A, 7mm CLIP SLOT, BLACK	34899-2080	2					A						SALEABLE	
KEYING OPTION E, 7mm CLIP SLOT, YELLOW	34899-2073	2				E							OK TO TOOL	
KEYING OPTION C, 7mm CLIP SLOT, YELLOW	34899-2072	2			C								SALEABLE	
KEYING OPTION B, 7mm CLIP SLOT, YELLOW	34899-2071	2		B									SALEABLE	
KEYING OPTION A, 7mm CLIP SLOT, YELLOW	34899-2070	2	A										SALEABLE	

DESCRIPTION	COLOR	MATERIAL
PLR	NATURAL	SPS/NYLON GF20
1x2 CONNECTOR HOUSING, KEYING OPTION A 40G CLIP SLOT	BLACK	SPS/NYLON GF20
1x2 CONNECTOR HOUSING, KEYING OPTION A 40G CLIP SLOT	YELLOW	SPS/NYLON GF20
1x2 CONNECTOR HOUSING, KEYING OPTION E 7mm CLIP SLOT	STONE GRAY	SPS/NYLON GF20
1x2 CONNECTOR HOUSING, KEYING OPTION C 7mm CLIP SLOT	DARK GRAY	SPS/NYLON GF20
1x2 CONNECTOR HOUSING, KEYING OPTION B 7mm CLIP SLOT	LIGHT GRAY	SPS/NYLON GF20
1x2 CONNECTOR HOUSING, KEYING OPTION A 7mm CLIP SLOT	BLACK	SPS/NYLON GF20
1x2 CONNECTOR HOUSING, KEYING OPTION E 7mm CLIP SLOT	YELLOW	SPS/NYLON GF20
1x2 CONNECTOR HOUSING, KEYING OPTION C 7mm CLIP SLOT	YELLOW	SPS/NYLON GF20
1x2 CONNECTOR HOUSING, KEYING OPTION B 7mm CLIP SLOT	YELLOW	SPS/NYLON GF20
1x2 CONNECTOR HOUSING, KEYING OPTION A 7mm CLIP SLOT	YELLOW	SPS/NYLON GF20

BOM/APPLICABLE COMPONENTS TABLE

LEGEND TABLE

ABREVIATION	COMPONENT
A	CONNECTOR HOUSING KEYING OPTION A
B	CONNECTOR HOUSING KEYING OPTION B
C	CONNECTOR HOUSING KEYING OPTION C
E	CONNECTOR HOUSING KEYING OPTION E

QUALITY SYMBOLS: = 0 / = 0 / = 0 / = 0 / = 0 / = 0 / = 0 / = 0

THIS DRAWING CONTAINS INFORMATION THAT IS PROPRIETARY TO MOLEX ELECTRONIC TECHNOLOGIES, LLC AND SHOULD NOT BE USED WITHOUT WRITTEN PERMISSION

EC NO: 117908 — DRWN: VYARAPPA 2017/04/11 — CHK'D: — APPR: KDEKOSKI 2017/06/22 — REV A15

GENERAL TOLERANCES (UNLESS SPECIFIED): ANGULAR TOL ± 3.0 °; 4 PLACES ±; 3 PLACES ±; 2 PLACES ± 0.1; 1 PLACE ± 0.2; 0 PLACES ± 0.5; DRAFT WHERE APPLICABLE MUST REMAIN WITHIN DIMENSIONS

DIMENSION UNITS: MM — SCALE:
DRWN BY: SKRAJENDRANA — DATE: 2013/11/06
CHK'D BY — DATE
APPR BY — DATE
DRAWING SIZE: D — THIRD ANGLE PROJECTION

molex®

1.2MM 1X2, 1X3 BLADE
SEALED ASSEMBLY CABLE SEAL

PRODUCT CUSTOMER DRAWING

SERIES	MATERIAL NUMBER	CUSTOMER
34899	SEE BOM	GENERAL MARKET

DOCUMENT NUMBER	DOC TYPE	DOC PART	SHEET NUMBER
SD-34899-2001	PSD	001	9 OF 11

RELEASE STATUS	P1	RELEASE DATE	22.06.2017 19:25:24

Creation date/time: 22.06.2017 19:25:24
REVISION: 01
DATE: 2017/06/06

1x3 BLADE SEALED ASSEMBLY BOM FOR WIRE DRESS COVER INTERFACE 1 REFER WIRE DRESS COVER INTERFACE SHEET FOR DETAILS

ASSEMBLY DESCRIPTION	ASSEMBLY PART NUMBER	WIRE DRESS COVER INTERFACE OPTION																	PRODUCTION TOOL STATUS	COMMENTS	MODEL NUMBER
KEYING OPTION D, 11mm CLIP SLOT, STONE GRAY	34899-3043	1																D	TOOLED BUT NOT VALIDATED		EM-34899-3033
KEYING OPTION C, 11mm CLIP SLOT, DARK GRAY	34899-3042	1															C		TOOLED BUT NOT VALIDATED		EM-34899-3032
KEYING OPTION B, 11mm CLIP SLOT, LIGHT GRAY	34899-3041	1														B			SALEABLE		EM-34899-3031
KEYING OPTION A, 11mm CLIP SLOT, BLACK	34899-3040	1													A				SALEABLE		EM-34899-3030
KEYING OPTION D, 11mm CLIP SLOT, YELLOW	34899-3033	1												D					TOOLED BUT NOT VALIDATED		EM-34899-3033
KEYING OPTION C, 11mm CLIP SLOT, YELLOW	34899-3032	1											C						TOOLED BUT NOT VALIDATED		EM-34899-3032
KEYING OPTION B, 11mm CLIP SLOT, YELLOW	34899-3031	1										B							SALEABLE		EM-34899-3031
KEYING OPTION A, 11mm CLIP SLOT, YELLOW	34899-3030	1									A								SALEABLE		EM-34899-3030
KEYING OPTION D, 7mm CLIP SLOT, STONE GRAY	34899-3023	1								D									TOOLED BUT NOT VALIDATED		EM-34899-3013
KEYING OPTION C, 7mm CLIP SLOT, DARK GRAY	34899-3022	1							C										TOOLED BUT NOT VALIDATED		EM-34899-3012
KEYING OPTION B, 7mm CLIP SLOT, LIGHT GRAY	34899-3021	1						B											SALEABLE		EM-34899-3011
KEYING OPTION A, 7mm CLIP SLOT, BLACK	34899-3020	1					A												SALEABLE		EM-34899-3010
KEYING OPTION D, 7mm CLIP SLOT, YELLOW	34899-3013	1				D													TOOLED BUT NOT VALIDATED		EM-34899-3013
KEYING OPTION C, 7mm CLIP SLOT, YELLOW	34899-3012	1			C														TOOLED BUT NOT VALIDATED		EM-34899-3012
KEYING OPTION B, 7mm CLIP SLOT, YELLOW	34899-3011	1		B															SALEABLE		EM-34899-3011
KEYING OPTION A, 7mm CLIP SLOT, YELLOW	34899-3010	1	A																SALEABLE		EM-34899-3010

DESCRIPTION	COLOR	MATERIAL
PLR	NATURAL	SPS/NYLON GF20
1x3 CONNECTOR HOUSING, KEYING OPTION D 11mm CLIP SLOT	STONE GRAY	SPS/NYLON GF20
1x3 CONNECTOR HOUSING, KEYING OPTION C 11mm CLIP SLOT	DARK GRAY	SPS/NYLON GF20
1x3 CONNECTOR HOUSING, KEYING OPTION B 11mm CLIP SLOT	LIGHT GRAY	SPS/NYLON GF20
1x3 CONNECTOR HOUSING, KEYING OPTION A 11mm CLIP SLOT	BLACK	SPS/NYLON GF20
1x3 CONNECTOR HOUSING, KEYING OPTION D 11mm CLIP SLOT	YELLOW	SPS/NYLON GF20
1x3 CONNECTOR HOUSING, KEYING OPTION C 11mm CLIP SLOT	YELLOW	SPS/NYLON GF20
1x3 CONNECTOR HOUSING, KEYING OPTION B 11mm CLIP SLOT	YELLOW	SPS/NYLON GF20
1x3 CONNECTOR HOUSING, KEYING OPTION A 11mm CLIP SLOT	YELLOW	SPS/NYLON GF20
1x3 CONNECTOR HOUSING, KEYING OPTION D 7mm CLIP SLOT	STONE GRAY	SPS/NYLON GF20
1x3 CONNECTOR HOUSING, KEYING OPTION C 7mm CLIP SLOT	DARK GRAY	SPS/NYLON GF20
1x3 CONNECTOR HOUSING, KEYING OPTION B 7mm CLIP SLOT	LIGHT GRAY	SPS/NYLON GF20
1x3 CONNECTOR HOUSING, KEYING OPTION A 7mm CLIP SLOT	BLACK	SPS/NYLON GF20
1x3 CONNECTOR HOUSING, KEYING OPTION D 7mm CLIP SLOT	YELLOW	SPS/NYLON GF20
1x3 CONNECTOR HOUSING, KEYING OPTION C 7mm CLIP SLOT	YELLOW	SPS/NYLON GF20
1x3 CONNECTOR HOUSING, KEYING OPTION B 7mm CLIP SLOT	YELLOW	SPS/NYLON GF20
1x3 CONNECTOR HOUSING, KEYING OPTION A 7mm CLIP SLOT	YELLOW	SPS/NYLON GF20

BOM/APPLICABLE COMPONENTS TABLE

LEGEND TABLE

ABREVIATION	COMPONENT
A	CONNECTOR HOUSING KEYING OPTION A
B	CONNECTOR HOUSING KEYING OPTION B
C	CONNECTOR HOUSING KEYING OPTION C
D	CONNECTOR HOUSING KEYING OPTION D

QUALITY SYMBOLS

= 0
= 0
= 0
= 0
= 0
= 0
= 0
= 0

THIS DRAWING CONTAINS INFORMATION THAT IS PROPRIETARY TO MOLEX ELECTRONIC TECHNOLOGIES, LLC AND SHOULD NOT BE USED WITHOUT WRITTEN PERMISSION

EC NO: 117908 2017/04/11
DRWN: VYARAPPA
CHK'D: KDEKOSKI 2017/06/22
APPR:
REV A15

GENERAL TOLERANCES (UNLESS SPECIFIED)

ANGULAR TOL	±	3.0 °
4 PLACES	±	
3 PLACES	±	
2 PLACES	±	0.1
1 PLACE	±	0.2
0 PLACES	±	0.5

DRAFT WHERE APPLICABLE MUST REMAIN WITHIN DIMENSIONS

DIMENSION UNITS: MM
SCALE:
DRWN BY: SKRAJENDRANA DATE: 2013/11/06
CHK'D BY: DATE:
APPR BY: DATE:
DRAWING SIZE: D
THIRD ANGLE PROJECTION

molex®

1.2MM 1X2, 1X3 BLADE
SEALED ASSEMBLY CABLE SEAL

PRODUCT CUSTOMER DRAWING

SERIES	MATERIAL NUMBER	CUSTOMER
34899	SEE BOM	GENERAL MARKET

DOCUMENT NUMBER	DOC TYPE	DOC PART	SHEET NUMBER
SD-34899-2001	PSD	001	10 OF 11

RELEASE STATUS	P1	RELEASE DATE	22.06.2017 19:25:24

FORMAT: molex-lb-prod-D
REVISION: 11
DATE: 2017/06/06

1x3 BLADE SEALED ASSEMBLY BOM FOR WIRE DRESS COVER INTERFACE 2 REFER WIRE DRESS COVER INTERFACE SHEET FOR DETAILS

ASSEMBLY DESCRIPTION	ASSEMBLY PART NUMBER	WIRE DRESS COVER INTERFACE OPTION																		PRODUCTION TOOL STATUS	COMMENTS	MODEL NUMBER
KEYING OPTION A, 40-G CLIP SLOT, BLACK	34899-3060	2																	A	CONCEPT		EM-34899-3050
KEYING OPTION A, 40-G CLIP SLOT, YELLOW	34899-3050	2																A		CONCEPT		EM-34899-3050
KEYING OPTION D, 11mm CLIP SLOT, STONE GRAY	34899-3123	2															D			OK TO TOOL		EM-34899-3033
KEYING OPTION C, 11mm CLIP SLOT, DARK GRAY	34899-3122	2														C				OK TO TOOL		EM-34899-3032
KEYING OPTION B, 11mm CLIP SLOT, LIGHT GRAY	34899-3121	2													B					SALEABLE		EM-34899-3031
KEYING OPTION A, 11mm CLIP SLOT, BLACK	34899-3120	2												A						SALEABLE		EM-34899-3030
KEYING OPTION D, 11mm CLIP SLOT, YELLOW	34899-3113	2											D							OK TO TOOL		EM-34899-3033
KEYING OPTION C, 11mm CLIP SLOT, YELLOW	34899-3112	2										C								OK TO TOOL		EM-34899-3032
KEYING OPTION B, 11mm CLIP SLOT, YELLOW	34899-3111	2									B									SALEABLE		EM-34899-3031
KEYING OPTION A, 11mm CLIP SLOT, YELLOW	34899-3110	2								A										SALEABLE		EM-34899-3030
KEYING OPTION D, 7mm CLIP SLOT, STONE GRAY	34899-3083	2							D											OK TO TOOL		EM-34899-3073
KEYING OPTION C, 7mm CLIP SLOT, DARK GRAY	34899-3082	2						C												OK TO TOOL		EM-34899-3072
KEYING OPTION B, 7mm CLIP SLOT, LIGHT GRAY	34899-3081	2					B													SALEABLE		EM-34899-3071
KEYING OPTION A, 7mm CLIP SLOT, BLACK	34899-3080	2				A														SALEABLE		EM-34899-3070
KEYING OPTION D, 7mm CLIP SLOT, YELLOW	34899-3073	2			D															OK TO TOOL		EM-34899-3073
KEYING OPTION C, 7mm CLIP SLOT, YELLOW	34899-3072	2		C																OK TO TOOL		EM-34899-3072
KEYING OPTION B, 7mm CLIP SLOT, YELLOW	34899-3071	2	B																	SALEABLE		EM-34899-3071
KEYING OPTION A, 7mm CLIP SLOT, YELLOW	34899-3070	2	A																	SALEABLE		EM-34899-3070

DESCRIPTION	COLOR	MATERIAL
PLR	NATURAL	SPS/NYLON GF20
1x3 CONNECTOR HOUSING, KEYING OPTION A 40G CLIP SLOT	BLACK	SPS/NYLON GF20
1x3 CONNECTOR HOUSING, KEYING OPTION A 40G CLIP SLOT	YELLOW	SPS/NYLON GF20
1x3 CONNECTOR HOUSING, KEYING OPTION D 11mm CLIP SLOT	STONE GRAY	SPS/NYLON GF20
1x3 CONNECTOR HOUSING, KEYING OPTION C 11mm CLIP SLOT	DARK GRAY	SPS/NYLON GF20
1x3 CONNECTOR HOUSING, KEYING OPTION B 11mm CLIP SLOT	LIGHT GRAY	SPS/NYLON GF20
1x3 CONNECTOR HOUSING, KEYING OPTION A 11mm CLIP SLOT	BLACK	SPS/NYLON GF20
1x3 CONNECTOR HOUSING, KEYING OPTION D 11mm CLIP SLOT	YELLOW	SPS/NYLON GF20
1x3 CONNECTOR HOUSING, KEYING OPTION C 11mm CLIP SLOT	YELLOW	SPS/NYLON GF20
1x3 CONNECTOR HOUSING, KEYING OPTION B 11mm CLIP SLOT	YELLOW	SPS/NYLON GF20
1x3 CONNECTOR HOUSING, KEYING OPTION A 11mm CLIP SLOT	YELLOW	SPS/NYLON GF20
1x3 CONNECTOR HOUSING, KEYING OPTION D 7mm CLIP SLOT	STONE GRAY	SPS/NYLON GF20
1x3 CONNECTOR HOUSING, KEYING OPTION C 7mm CLIP SLOT	DARK GRAY	SPS/NYLON GF20
1x3 CONNECTOR HOUSING, KEYING OPTION B 7mm CLIP SLOT	LIGHT GRAY	SPS/NYLON GF20
1x3 CONNECTOR HOUSING, KEYING OPTION A 7mm CLIP SLOT	BLACK	SPS/NYLON GF20
1x3 CONNECTOR HOUSING, KEYING OPTION D 7mm CLIP SLOT	YELLOW	SPS/NYLON GF20
1x3 CONNECTOR HOUSING, KEYING OPTION C 7mm CLIP SLOT	YELLOW	SPS/NYLON GF20
1x3 CONNECTOR HOUSING, KEYING OPTION B 7mm CLIP SLOT	YELLOW	SPS/NYLON GF20
1x3 CONNECTOR HOUSING, KEYING OPTION A 7mm CLIP SLOT	YELLOW	SPS/NYLON GF20

BOM/APPLICABLE COMPONENTS TABLE

LEGEND TABLE

ABREVIATION	COMPONENT
A	CONNECTOR HOUSING KEYING OPTION A
B	CONNECTOR HOUSING KEYING OPTION B
C	CONNECTOR HOUSING KEYING OPTION C
D	CONNECTOR HOUSING KEYING OPTION D

QUALITY SYMBOLS: E/A = 0; E/C = 0; E/P = 0; ▼ = 0; E/C = 0; ☒ = 0; ■ = 0; E/C = 0

THIS DRAWING CONTAINS INFORMATION THAT IS PROPRIETARY TO MOLEX ELECTRONIC TECHNOLOGIES, LLC AND SHOULD NOT BE USED WITHOUT WRITTEN PERMISSION

EC NO: 117908 2017/04/11
DRWN: VYARAPPA 2017/06/22
CHK'D: KDEKOSKI
APPR:

REV: A15

GENERAL TOLERANCES (UNLESS SPECIFIED)

ANGULAR TOL	±	3.0 °
4 PLACES	±	
3 PLACES	±	
2 PLACES	±	0.1
1 PLACE	±	0.2
0 PLACES	±	0.5

DRAFT WHERE APPLICABLE MUST REMAIN WITHIN DIMENSIONS

DIMENSION UNITS: MM
SCALE:
DRWN BY: SKRAJENDRANA DATE: 2013/11/06
CHK'D BY: DATE:
APPR BY: DATE:
DRAWING SIZE: D
THIRD ANGLE PROJECTION

molex®

1.2MM 1X2, 1X3 BLADE
SEALED ASSEMBLY CABLE SEAL

PRODUCT CUSTOMER DRAWING

SERIES	MATERIAL NUMBER	CUSTOMER
34899	SEE BOM	GENERAL MARKET

DOCUMENT NUMBER	DOC TYPE	DOC PART	SHEET NUMBER
SD-34899-2001	PSD	001	11 OF 11

RELEASE STATUS	P1	RELEASE DATE	22.06.2017 19:25:24

FORMAT: model-lib-prod-0
REVISION: 11
DATE: 2017-06-06

TABLE OF CONTENTS

SHEET NO.	SHEET DESCRIPTION
1	NOTES
2	1x4 BLADE SEALED ASSEMBLY KEYING CONFIGURATIONS
3	1x6 BLADE SEALED ASSEMBLY KEYING CONFIGURATIONS
4	CLIP SLOT CONFIGURATIONS
5	BLADE SEALED ASSEMBLY
6	CONNECTION SYSTEM PACKAGING
7	WIRE DRESS COVER INTERFACE OPTIONS
8	1x4 BLADE SEALED ASSEMBLY BOM INTERFACE OPTION 1
9	1x4 BLADE SEALED ASSEMBLY BOM INTERFACE OPTION 2
10	1x6 BLADE SEALED ASSEMBLY BOM INTERFACE OPTION 1
11	1x6 BLADE SEALED ASSEMBLY BOM INTERFACE OPTION 2

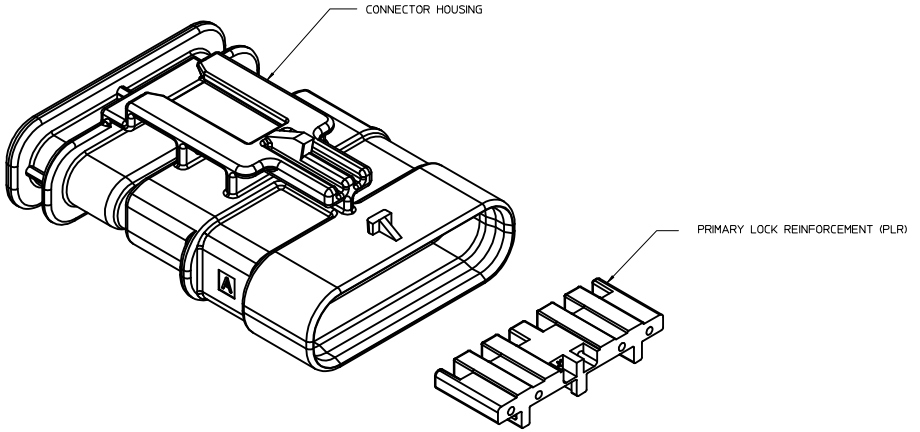

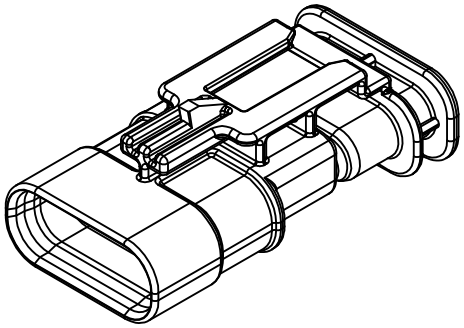

1x4 BLADE SEALED ASSEMBLY

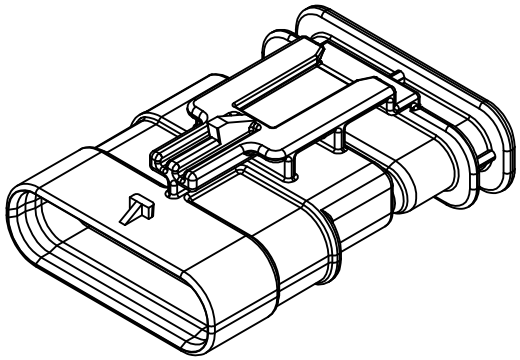

1x6 BLADE SEALED ASSEMBLY

NOTES: VALID UNLESS OTHERWISE SPECIFIED

1. GENERAL:
a. APPLICATION SPECIFICATION SEE: AS-34900-0001
CONTAINS: PRODUCT INTRODUCTION, PRODUCT SUMMARY, CONNECTOR ASSEMBLY, PACKAGING INFORMATION, CONNECTOR MATING, SERVICE INSTRUCTIONS, ELECTRICAL CONTINUITY CHECKING, CRIMPING, AND TROUBLESHOOTING.
b. PRODUCT SPECIFICATION SEE: PS-34900-0001
CONTAINS: PRODUCT INTRODUCTION, PRODUCT SUMMARY, RATINGS (CURRENT, TEMPERATURE, SEALING, AND FLAMMABILITY), AND PRODUCT VALIDATION.
c. PACKAGING SPECIFICATION PER MOLEX DRAWING: PK-31301-898
d. PARTS MUST BE IN COMPLIANCE TO MOLEX CHEMICAL SUBSTANCES FOR PRODUCTS AND PACKAGING SPECIFICATION: QEHS-699000-301
e. DATA MUST BE SUBMITTED UNDER THE MOLEX PART NUMBER TO IMDS (COMPANY ID#13255)

2. DESIGN - MATERIALS:
a. SEE BOM TABLE

3. DESIGN - GEOMETRY:
a. THIS IS A 100% CAD GENERATED PART. THE CAD MATHEMATICAL DATA IS THE MASTER FOR THIS PART. FOR DIMENSIONAL OR ANY INFORMATION NOT SHOWN ON THIS DRAWING, ANALYZE THE CAD MODEL.
b. GEOMETRIC DIMENSIONS AND TOLERANCES PER ASME Y14.5M - 1994
c. EDGES AND UNDIMENSIONED DETAILS PER ISO13715
d. CORNERS SHOWN AS SHARP TO BE R 0.2 MAX.
e. LETTERING SHALL BE 0.15 MAX RAISED IN 0.25 MAX RECESS PAD. THIS INCLUDES RECYCLING CODE, CAVITY ID, VENDOR IDENTIFICATION, AND CUSTOMER MATERIAL NUMBER.
f. VISUAL DEFECTS SHALL MEET COSMETIC STANDARD PS-45499-002 (Class B) CAD MODEL.
g. LASER MARKING:
1. PART NUMBER
2. DAY OF THE YEAR
3. SHIFT
4. YEAR

REV	DESCRIPTION
B15	UPDATED BALLOONS 2-1 & 2-2 ON SHEET 7
B14	UPDATED PARTS TO SALEABLE
B13	RELEASED PRIMARY KEYS NON-SIR SALEABLE
B12	UPDATED PLR LOCK UP GEOMETRY
B11	UPDATED WDC INTERFACE PART# TO TOOLED BUT NOT VALIDATED
B10	UPDATED TOLERANCES WDC FEATURES
B9	1X4, 1X6 PART # WIRE DRESS COVER INTERFACE FEATURES OK TO TOOL
B8	1X4 40G CLIP-SLOT OK TO TOOL
B7	1X4 PART # UPDATED TO 'TOOLED BUT NOT VALIDATED'
B6	ADDED 40G CLIP-SLOT PART NUMBERS
B5	BOM CORRECTIONS AND UPDATES
B4	BOM CORRECTIONS AND UPDATES
B3	1x4, 1x6 NON-SIR PART# OK TO TOOL
B2	1x6 11mm CLIP SLOT PART # OK TO TOOL
B1	1x6 11mm CLIP SLOT PART NUMBERS ADDED
B	ADDED 1x4 INFORMATION
A	OK TO TOOL

INSPECTION BALLOON NUMBER LOG

PER DRAWING REVISION: B12

LAST BALLOON NUMBER USED: WDC2-10

ADDED BALLOON NUMBERS: WDC2-1 - WDC2-10

REMOVED BALLOON NUMBERS:

ENTER DESCRIPTION
EC NO: UAU2016-1803 2016/06/01
DRWN:MKOWALSKY 2016/06/15
CHKD:
APPR:KDEKOSKI
DESCRIPTION
REV B15

QUALITY SYMBOLS: ⊽=0 (4 PLACES), ⊽=0 (3 PLACES), ⊽=0 (2 PLACES), ⊽=0 (1 PLACE), ⊽=0 (0 PLACE)

GENERAL TOLERANCES (UNLESS SPECIFIED)

	mm	INCH
4 PLACES	± ---	± ---
3 PLACES	± ---	± ---
2 PLACES	± 0.10	± ---
1 PLACE	± 0.20	± ---
0 PLACE	± 0.50	±

ANGULAR ± 3 °

DRAFT WHERE APPLICABLE MUST REMAIN WITHIN DIMENSIONS

DIMENSION STYLE: MM ONLY

		DATE
DRAWN BY	MVANSLAMBROU	2012/07/13
CHECKED BY	VKOSHY	2012/07/19
APPROVED BY	VKOSHY	2012/07/24

MATERIAL NO.: SEE BOM

SIZE: D

SCALE: 4:1

DESIGN UNITS: METRIC

THIRD ANGLE PROJECTION

TITLE: 1.2MM 1X4, 1X6 BLADE SEALED ASSEMBLY CABLE SEAL

molex

DOCUMENT NO.: SD-34899-6001

SHEET NO.: 1 OF 11

THIS DRAWING CONTAINS INFORMATION THAT IS PROPRIETARY TO MOLEX INCORPORATED AND SHOULD NOT BE USED WITHOUT WRITTEN PERMISSION

1x4 BLADE SEALED ASSEMBLY KEYING CONFIGURATIONS. FOR PART NUMBERS REFER TO BOM SHEET.

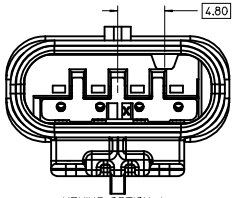

KEYING OPTION A

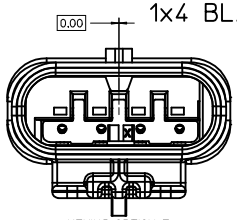

KEYING OPTION F

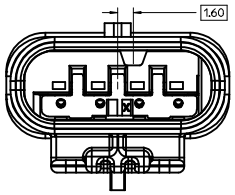

KEYING OPTION B

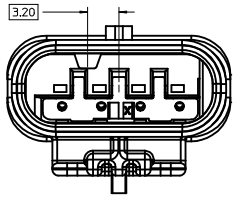

KEYING OPTION G

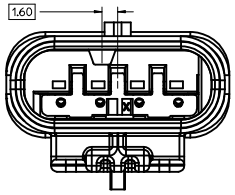

KEYING OPTION C

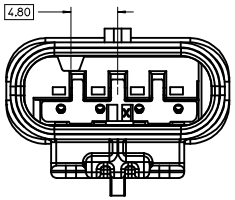

KEYING OPTION D

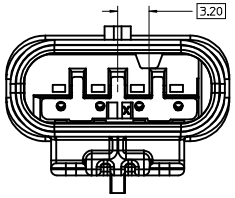

KEYING OPTION E

ENTER DESCRIPTION EC NO: UAU2016-1803 DRWN:MKOWALSKY 2016/06/01 CHKD: APPR:KOEKOSKI 2016/06/15 DESCRIPTION B15 REV	QUALITY SYMBOLS =0 =0 =0	GENERAL TOLERANCES (UNLESS SPECIFIED) mm / INCH 4 PLACES ±--- / ±--- 3 PLACES ±--- / ±--- 2 PLACES ±0.10 / ±--- 1 PLACE ±0.20 / ±--- 0 PLACE ±0.50 / ± ANGULAR ± 3 ° DRAFT WHERE APPLICABLE MUST REMAIN WITHIN DIMENSIONS	DIMENSION STYLE MM ONLY DRAWN BY MVANSLAMBROU DATE 2012/07/13 CHECKED BY VKOSHY DATE 2012/07/19 APPROVED BY VKOSHY DATE 2012/07/24 MATERIAL NO. SEE BOM	SCALE 4:1 DESIGN UNITS METRIC THIRD ANGLE PROJECTION TITLE 1.2MM 1X4, 1X6 BLADE SEALED ASSEMBLY CABLE SEAL molex DOCUMENT NO. SD-34899-6001	SHEET NO. 2 OF 11	SIZE D THIS DRAWING CONTAINS INFORMATION THAT IS PROPRIETARY TO MOLEX INCORPORATED AND SHOULD NOT BE USED WITHOUT WRITTEN PERMISSION

1x6 BLADE SEALED ASSEMBLY KEYING CONFIGURATIONS. FOR PART NUMBERS REFER TO BOM SHEET.

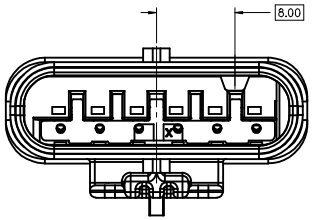

KEYING OPTION A

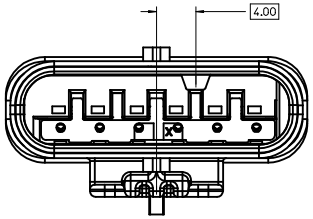

KEYING OPTION B

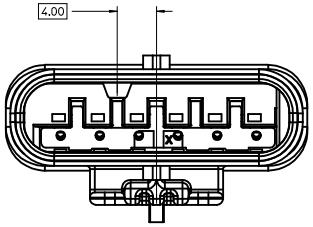

KEYING OPTION C

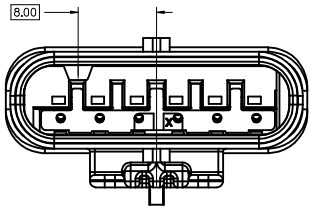

KEYING OPTION D

ENTER DESCRIPTION EC NO: UAU2016-1803 DRWN:MKOMALSKY 2016/06/01 CHKD: APPR:KOEKOSKI 2016/06/15 DESCRIPTION B15 REV	QUALITY SYMBOLS =0 =0 =0 =0	GENERAL TOLERANCES (UNLESS SPECIFIED) mm / INCH 4 PLACES ±--- / ±--- 3 PLACES ±--- / ±--- 2 PLACES ±0.10 / ±--- 1 PLACE ±0.20 / ±--- 0 PLACE ±0.50 / ± ANGULAR ± 3 ° DRAFT WHERE APPLICABLE MUST REMAIN WITHIN DIMENSIONS	DIMENSION STYLE MM ONLY DRAWN BY MVANSLAMBROU DATE 2012/07/13 CHECKED BY VKOSHY DATE 2012/07/19 APPROVED BY VKOSHY DATE 2012/07/24 MATERIAL NO. SEE BOM SIZE D	SCALE 4:1 DESIGN UNITS METRIC THIRD ANGLE PROJECTION TITLE 1.2MM 1X4, 1X6 BLADE SEALED ASSEMBLY CABLE SEAL molex DOCUMENT NO. SD-34899-6001 SHEET NO. 3 OF 11	THIS DRAWING CONTAINS INFORMATION THAT IS PROPRIETARY TO MOLEX INCORPORATED AND SHOULD NOT BE USED WITHOUT WRITTEN PERMISSION	

CLIP-SLOT CONFIGURATIONS. FOR PART NUMBERS REFER TO BOM SHEET.

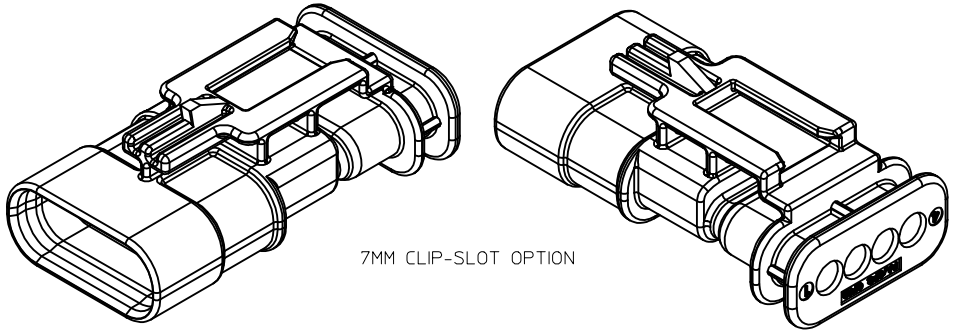

7MM CLIP-SLOT OPTION

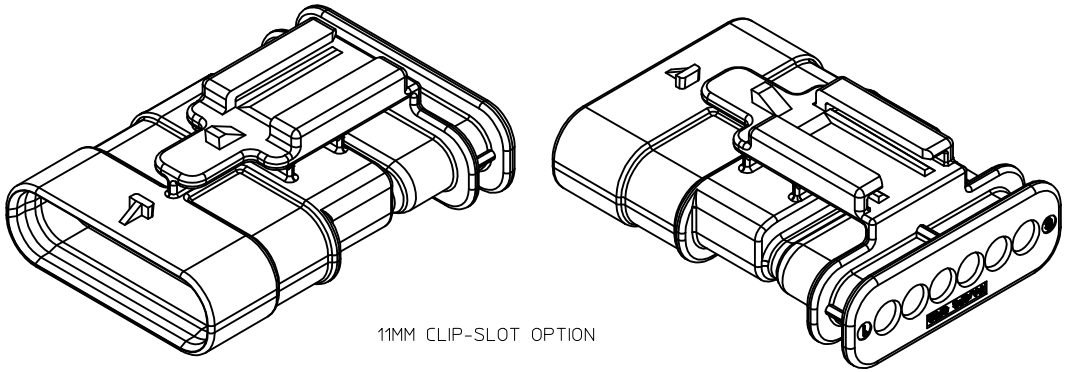

11MM CLIP-SLOT OPTION

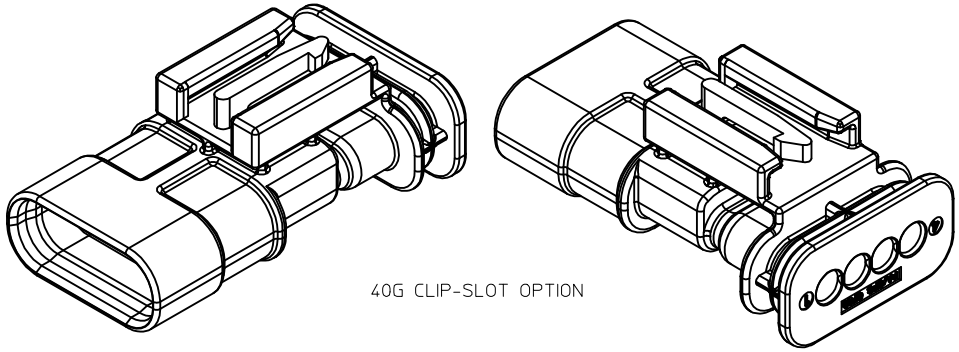

40G CLIP-SLOT OPTION

ENTER DESCRIPTION EC NO: UAU2016-1803 DRWN:MKOWALSKY 2016/06/01 CHKD: APPR:KOEKOSKI 2016/06/15 DESCRIPTION B15 REV	QUALITY SYMBOLS =0 =0 =0	GENERAL TOLERANCES (UNLESS SPECIFIED) mm / INCH 4 PLACES ± --- / ± --- 3 PLACES ± --- / ± --- 2 PLACES ± 0.10 / ± --- 1 PLACE ± 0.20 / ± --- 0 PLACE ± 0.50 / ± ANGULAR ± 3 ° DRAFT WHERE APPLICABLE MUST REMAIN WITHIN DIMENSIONS	DIMENSION STYLE MM ONLY DRAWN BY MVANSLAMBROU DATE 2012/07/13 CHECKED BY VKOSHY DATE 2012/07/19 APPROVED BY VKOSHY DATE 2012/07/24 MATERIAL NO. SEE BOM	SCALE 4:1 DESIGN UNITS METRIC THIRD ANGLE PROJECTION TITLE 1.2MM 1X4, 1X6 BLADE SEALED ASSEMBLY CABLE SEAL molex DOCUMENT NO. SD-34899-6001 SHEET NO. 4 OF 11 SIZE D	THIS DRAWING CONTAINS INFORMATION THAT IS PROPRIETARY TO MOLEX INCORPORATED AND SHOULD NOT BE USED WITHOUT WRITTEN PERMISSION						

BLADE SEALED ASSEMBLY

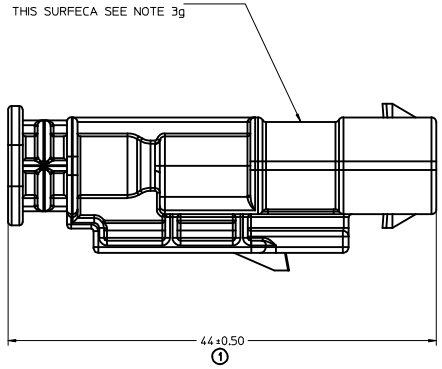

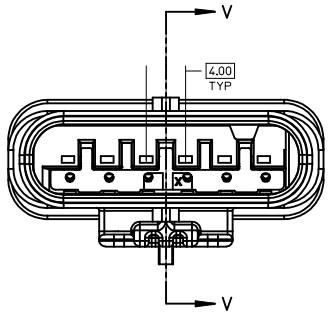

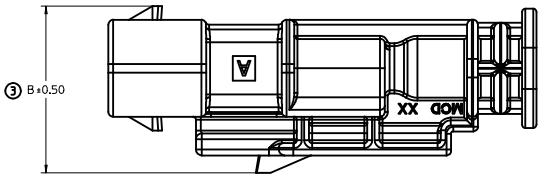

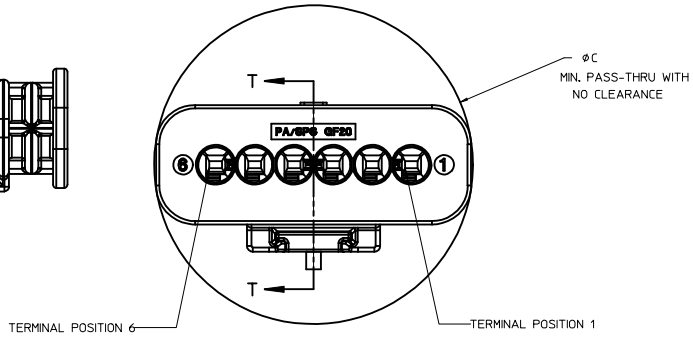

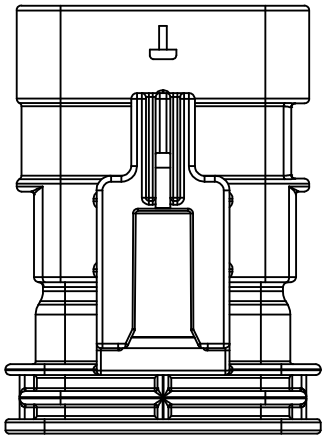

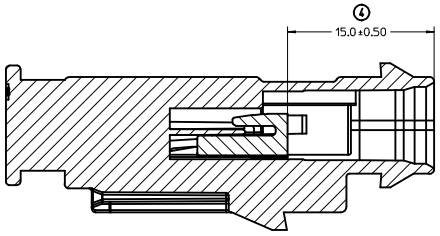

SECTION V-V

PRIMARY LOCK REINFORCEMENT (PLR) SHOWN
IN THE PRE-STAGED POSITION

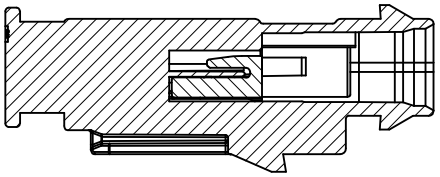

SECTION T-T

PRIMARY LOCK REINFORCEMENT (PLR) SHOWN
IN THE FINAL-LOCK POSITION

1x6 BLADE SEALED ASSEMBLY, 40G CLIP SLOT	17.5	32.75
1x6 BLADE SEALED ASSEMBLY, 11mm CLIP SLOT	16	32.75
1x6 BLADE SEALED ASSEMBLY, 7mm CLIP SLOT	17.25	32.75
1x4 BLADE SEALED ASSEMBLY, 40G CLIP SLOT	17.5	25.25
1x4 BLADE SEALED ASSEMBLY, 11mm CLIP SLOT	16	24.75
1x4 BLADE SEALED ASSEMBLY, 7mm CLIP SLOT	17.25	24.75
CONFIGURATION	B	C

CHARTED DIMENSIONS

ENTER DESCRIPTION
EC NO: UAU2016-1803 2016/06/01
DRWN:MKOWALSKY 2016/06/15
CHKD:
APPR:KOEKOSKI
DESCRIPTION
B15
REV

QUALITY SYMBOLS: 4 PLACES =0; 3 PLACES =0; 2 PLACES =0; 1 PLACE =0; 0 PLACE =0

GENERAL TOLERANCES (UNLESS SPECIFIED)

	mm	INCH
4 PLACES	± ---	± ---
3 PLACES	± ---	± ---
2 PLACES	± 0.10	± ---
1 PLACE	± 0.20	± ---
0 PLACE	± 0.50	±
ANGULAR ± 3 °		

DRAFT WHERE APPLICABLE MUST REMAIN WITHIN DIMENSIONS

DIMENSION STYLE: MM ONLY
SCALE: 4:1
DESIGN UNITS: METRIC
THIRD ANGLE PROJECTION

		DATE
DRAWN BY	MVANSLAMBROU	2012/07/13
CHECKED BY	VKOSHY	2012/07/19
APPROVED BY	VKOSHY	2012/07/24

TITLE: 1.2MM 1X4, 1X6 BLADE SEALED ASSEMBLY CABLE SEAL

molex

MATERIAL NO.: SEE BOM
DOCUMENT NO.: SD-34899-6001
SHEET NO.: 5 OF 11
SIZE: D

THIS DRAWING CONTAINS INFORMATION THAT IS PROPRIETARY TO MOLEX INCORPORATED AND SHOULD NOT BE USED WITHOUT WRITTEN PERMISSION

CONNECTION SYSTEM PACKAGING

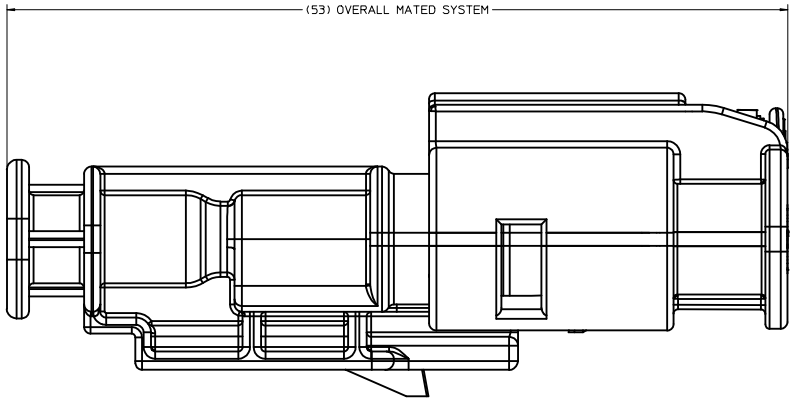

MODEL USED "AM-120-S-006-1-Z01"

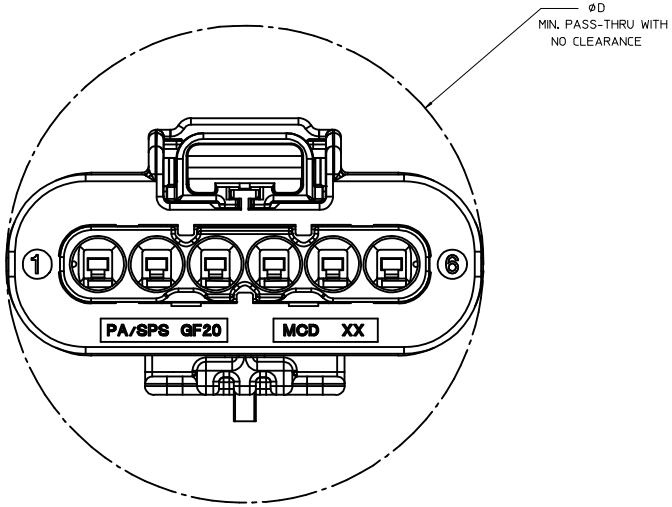

1x6 RECEPTACLE MATED TO 1x6 BLADE, 40 CLIP SLOT	TBD
1x6 RECEPTACLE MATED TO 1x6 BLADE, 11mm CLIP SLOT	33.5
1x6 RECEPTACLE MATED TO 1x6 BLADE, 7mm CLIP SLOT	33.5
1x4 RECEPTACLE MATED TO 1x4 BLADE, 40G CLIP SLOT	25.50
1x4 RECEPTACLE MATED TO 1x4 BLADE, 11mm CLIP SLOT	25.50
1x4 RECEPTACLE MATED TO 1x4 BLADE, 7mm CLIP SLOT	25.50
1.2mm CONNECTION SYSTEM CONFIGURATION	D
CHARTED DIMENSIONS	

ENTER DESCRIPTION
EC NO: UAU2016-1803 2016/06/01
DRWN:MKOWALSKY 2016/06/15
CHKD:
APPR:KOEKOSKI
DESCRIPTION
B15
REV

QUALITY SYMBOLS
=0
=0
=0

GENERAL TOLERANCES (UNLESS SPECIFIED)

	mm	INCH
4 PLACES	± ---	± ---
3 PLACES	± ---	± ---
2 PLACES	± 0.10	± ---
1 PLACE	± 0.20	± ---
0 PLACE	± 0.50	±
ANGULAR ± 3 °		

DRAFT WHERE APPLICABLE MUST REMAIN WITHIN DIMENSIONS

DIMENSION STYLE: MM ONLY
SCALE: 6:1
DESIGN UNITS: METRIC
THIRD ANGLE PROJECTION

DRAWN BY: MVANSLAMBROU DATE: 2012/07/13
CHECKED BY: VKOSHY DATE: 2012/07/19
APPROVED BY: VKOSHY DATE: 2012/07/24
MATERIAL NO.: SEE BOM

TITLE: 1.2MM 1X4, 1X6 BLADE SEALED ASSEMBLY CABLE SEAL

molex

DOCUMENT NO.: SD-34899-6001
SHEET NO.: 6 OF 11

SIZE: D

THIS DRAWING CONTAINS INFORMATION THAT IS PROPRIETARY TO MOLEX INCORPORATED AND SHOULD NOT BE USED WITHOUT WRITTEN PERMISSION

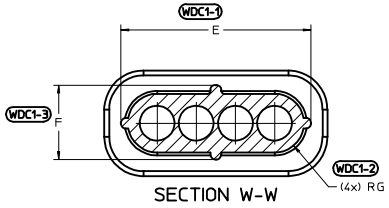

6 CIRCUIT	30.8	10.8	5.4	27.4	7.6	3.0
4 CIRCUIT	22.8	10.8	5.4	19.4	7.6	3.0
CONFIGURATION	A	B	C	E	F	G
CHARTED DIMENSIONS						

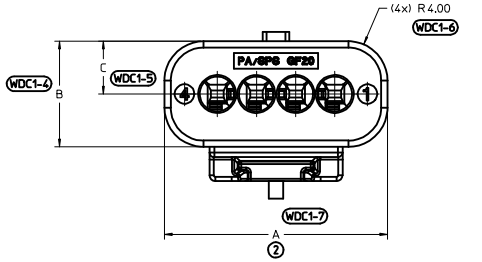

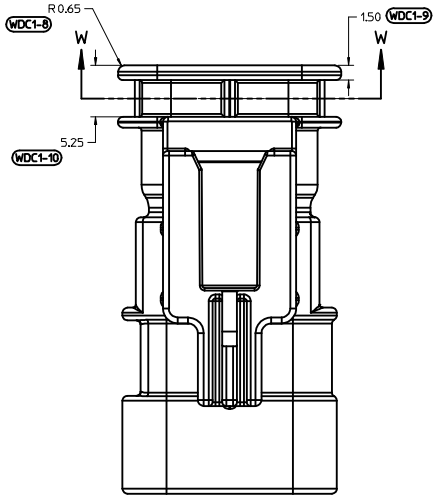

WIRE DRESS COVER
INTERFACE OPTION 1
WIRE DRESS COVERS
NOT AVAILABLE

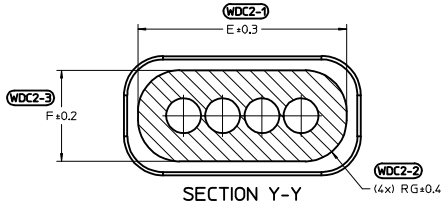

6 CIRCUIT	32.2	12.2	6.1	29.3	9.3	4.2
4 CIRCUIT	24.2	12.2	6.1	21.3	9.3	4.2
CONFIGURATION	A	B	C	E	F	G
CHARTED DIMENSIONS						

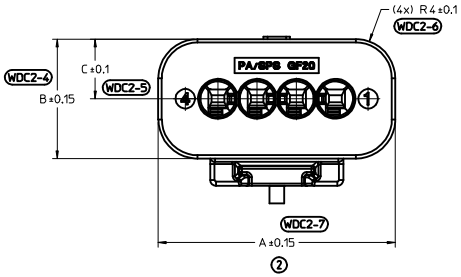

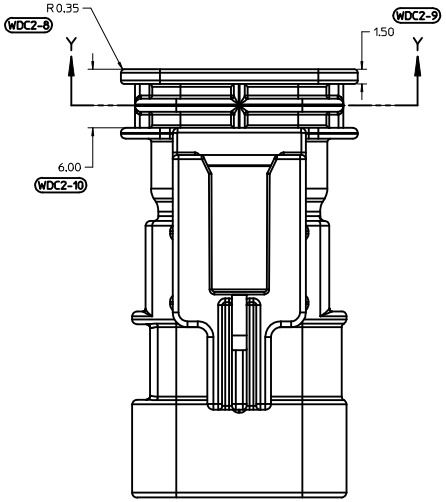

WIRE DRESS COVER
INTERFACE OPTION 2
BASED ON HIRSCHMANN INTERFACE
DRAWING 808-012-xxx REV B5

ENTER DESCRIPTION EC NO: UAU2016-1803 2016/06/01 DRWN:MKOWALSKY 2016/06/15 CHKD: APPR:KOEKOSKI DESCRIPTION B15 REV	QUALITY SYMBOLS =0 =0 =0	GENERAL TOLERANCES (UNLESS SPECIFIED) mm / INCH 4 PLACES ± --- / ± --- 3 PLACES ± --- / ± --- 2 PLACES ± 0.10 / ± --- 1 PLACE ± 0.20 / ± --- 0 PLACE ± 0.50 / ± ANGULAR ± 3 ° DRAFT WHERE APPLICABLE MUST REMAIN WITHIN DIMENSIONS	DIMENSION STYLE MM ONLY DRAWN BY MVANSLAMBROU DATE 2012/07/13 CHECKED BY VKOSHY DATE 2012/07/19 APPROVED BY VKOSHY DATE 2012/07/24 MATERIAL NO. SEE TABLE	SCALE 4:1 DOCUMENT NO. SD-34899-6001	DESIGN UNITS METRIC SHEET NO. 7 OF 11	THIRD ANGLE PROJECTION TITLE 1.2MM 1X4, 1X6 BLADE SEALED ASSEMBLY CABLE SEAL molex	

SIZE D

THIS DRAWING CONTAINS INFORMATION THAT IS PROPRIETARY TO MOLEX INCORPORATED AND SHOULD NOT BE USED WITHOUT WRITTEN PERMISSION

1x4 BLADE SEALED ASSEMBLY BOM FOR WIRE DRESS COVER INTERFACE 1 REFER WIRE DRESS INTERFACE SHEET FOR DETAILS

ASSEMBLY DESCRIPTION	ASSEMBLY PART NUMBER	PRODUCTION TOOL STATUS	COMMENTS
KEYING OPTION G, 11mm CLIP SLOT, LIGHT GRAY	34899-4043	CONCEPT	
KEYING OPTION F, 11mm CLIP SLOT, BLACK	34899-4042	CONCEPT	
KEYING OPTION E, 11mm CLIP SLOT, DARK GRAY	34899-4041	CONCEPT	
KEYING OPTION D, 11mm CLIP SLOT, LIGHT GRAY	34899-4040	CONCEPT	
KEYING OPTION C, 11mm CLIP SLOT, DARK GRAY	34899-4039	CONCEPT	
KEYING OPTION B, 11mm CLIP SLOT, STONE GRAY	34899-4038	CONCEPT	
KEYING OPTION A, 11mm CLIP SLOT, BLACK	34899-4037	CONCEPT	
KEYING OPTION G, 11mm CLIP SLOT, YELLOW	34899-4036	CONCEPT	
KEYING OPTION F, 11mm CLIP SLOT, YELLOW	34899-4035	CONCEPT	
KEYING OPTION E, 11mm CLIP SLOT, YELLOW	34899-4034	CONCEPT	
KEYING OPTION D, 11mm CLIP SLOT, YELLOW	34899-4033	CONCEPT	
KEYING OPTION C, 11mm CLIP SLOT, YELLOW	34899-4032	CONCEPT	
KEYING OPTION B, 11mm CLIP SLOT, YELLOW	34899-4031	CONCEPT	
KEYING OPTION A, 11mm CLIP SLOT, YELLOW	34899-4030	CONCEPT	
KEYING OPTION G, 7mm CLIP SLOT, LIGHT GRAY	34899-4026	SALEABLE	
KEYING OPTION F, 7mm CLIP SLOT, BLACK	34899-4025	SALEABLE	
KEYING OPTION E, 7mm CLIP SLOT, DARK GRAY	34899-4024	SALEABLE	
KEYING OPTION D, 7mm CLIP SLOT, LIGHT GRAY	34899-4023	SALEABLE	
KEYING OPTION C, 7mm CLIP SLOT, DARK GRAY	34899-4022	SALEABLE	
KEYING OPTION B, 7mm CLIP SLOT, STONE GRAY	34899-4021	SALEABLE	
KEYING OPTION A, 7mm CLIP SLOT, BLACK	34899-4020	SALEABLE	
KEYING OPTION G, 7mm CLIP SLOT, YELLOW	34899-4016	SALEABLE	
KEYING OPTION F, 7mm CLIP SLOT, YELLOW	34899-4015	SALEABLE	
KEYING OPTION E, 7mm CLIP SLOT, YELLOW	34899-4014	SALEABLE	
KEYING OPTION D, 7mm CLIP SLOT, YELLOW	34899-4013	SALEABLE	
KEYING OPTION C, 7mm CLIP SLOT, YELLOW	34899-4012	SALEABLE	
KEYING OPTION B, 7mm CLIP SLOT, YELLOW	34899-4011	SALEABLE	
KEYING OPTION A, 7mm CLIP SLOT, YELLOW	34899-4010	SALEABLE	

DESCRIPTION	COLOR	MATERIAL
PLR	NATURAL	SPS/NYLON GF20
1x4 CONNECTOR HOUSING, KEYING OPTION G 11mm CLIP SLOT	LIGHT GRAY	SPS/NYLON GF20
1x4 CONNECTOR HOUSING, KEYING OPTION F 11mm CLIP SLOT	BLACK	SPS/NYLON GF20
1x4 CONNECTOR HOUSING, KEYING OPTION E 11mm CLIP SLOT	DARK GRAY	SPS/NYLON GF20
1x4 CONNECTOR HOUSING, KEYING OPTION D 11mm CLIP SLOT	LIGHT GRAY	SPS/NYLON GF20
1x4 CONNECTOR HOUSING, KEYING OPTION C 11mm CLIP SLOT	DARK GRAY	SPS/NYLON GF20
1x4 CONNECTOR HOUSING, KEYING OPTION B 11mm CLIP SLOT	STONE GRAY	SPS/NYLON GF20
1x4 CONNECTOR HOUSING, KEYING OPTION A 11mm CLIP SLOT	BLACK	SPS/NYLON GF20
1x4 CONNECTOR HOUSING, KEYING OPTION G 11mm CLIP SLOT	YELLOW	SPS/NYLON GF20
1x4 CONNECTOR HOUSING, KEYING OPTION F 11mm CLIP SLOT	YELLOW	SPS/NYLON GF20
1x4 CONNECTOR HOUSING, KEYING OPTION E 11mm CLIP SLOT	YELLOW	SPS/NYLON GF20
1x4 CONNECTOR HOUSING, KEYING OPTION D 11mm CLIP SLOT	YELLOW	SPS/NYLON GF20
1x4 CONNECTOR HOUSING, KEYING OPTION C 11mm CLIP SLOT	YELLOW	SPS/NYLON GF20
1x4 CONNECTOR HOUSING, KEYING OPTION B 11mm CLIP SLOT	YELLOW	SPS/NYLON GF20
1x4 CONNECTOR HOUSING, KEYING OPTION A 11mm CLIP SLOT	YELLOW	SPS/NYLON GF20
1x4 CONNECTOR HOUSING, KEYING OPTION G 7mm CLIP SLOT	LIGHT GRAY	SPS/NYLON GF20
1x4 CONNECTOR HOUSING, KEYING OPTION F 7mm CLIP SLOT	BLACK	SPS/NYLON GF20
1x4 CONNECTOR HOUSING, KEYING OPTION E 7mm CLIP SLOT	DARK GRAY	SPS/NYLON GF20
1x4 CONNECTOR HOUSING, KEYING OPTION D 7mm CLIP SLOT	LIGHT GRAY	SPS/NYLON GF20
1x4 CONNECTOR HOUSING, KEYING OPTION C 7mm CLIP SLOT	DARK GRAY	SPS/NYLON GF20
1x4 CONNECTOR HOUSING, KEYING OPTION B 7mm CLIP SLOT	STONE GRAY	SPS/NYLON GF20
1x4 CONNECTOR HOUSING, KEYING OPTION A 7mm CLIP SLOT	BLACK	SPS/NYLON GF20
1x4 CONNECTOR HOUSING, KEYING OPTION G 7mm CLIP SLOT	YELLOW	SPS/NYLON GF20
1x4 CONNECTOR HOUSING, KEYING OPTION F 7mm CLIP SLOT	YELLOW	SPS/NYLON GF20
1x4 CONNECTOR HOUSING, KEYING OPTION E 7mm CLIP SLOT	YELLOW	SPS/NYLON GF20
1x4 CONNECTOR HOUSING, KEYING OPTION D 7mm CLIP SLOT	YELLOW	SPS/NYLON GF20
1x4 CONNECTOR HOUSING, KEYING OPTION C 7mm CLIP SLOT	YELLOW	SPS/NYLON GF20
1x4 CONNECTOR HOUSING, KEYING OPTION B 7mm CLIP SLOT	YELLOW	SPS/NYLON GF20
1x4 CONNECTOR HOUSING, KEYING OPTION A 7mm CLIP SLOT	YELLOW	SPS/NYLON GF20

BOM/APPLICABLE COMPONENTS TABLE

LEGEND TABLE

ABREVIATION	COMPONENT
A	CONNECTOR HOUSING KEYING OPTION A
B	CONNECTOR HOUSING KEYING OPTION B
C	CONNECTOR HOUSING KEYING OPTION C
D	CONNECTOR HOUSING KEYING OPTION D
E	CONNECTOR HOUSING KEYING OPTION E
F	CONNECTOR HOUSING KEYING OPTION F
G	CONNECTOR HOUSING KEYING OPTION G
PLR	PLR

ENTER DESCRIPTION
EC NO: UAU2016-1803 2016/06/01
DRWN:MKOWALSKY 2016/06/15
CHKD:
APPR:KOEKOSKI
DESCRIPTION
B15
REV

QUALITY SYMBOLS
=0
=0
=0

GENERAL TOLERANCES (UNLESS SPECIFIED)

	mm	INCH
4 PLACES	± ---	± ---
3 PLACES	± ---	± ---
2 PLACES	± 0.10	± ---
1 PLACE	± 0.20	± ---
0 PLACE	± 0.50	±

ANGULAR ± 3 °
DRAFT WHERE APPLICABLE MUST REMAIN WITHIN DIMENSIONS

DIMENSION STYLE: MM ONLY
SCALE: 2:1
DESIGN UNITS: METRIC
THIRD ANGLE PROJECTION

DRAWN BY: MVANSLAMBROU DATE: 2012/07/13
CHECKED BY: VKOSHY DATE: 2012/07/19
APPROVED BY: VKOSHY DATE: 2012/07/24
MATERIAL NO.: SEE BOM

TITLE: 1.2MM 1X4, 1X6 BLADE SEALED ASSEMBLY CABLE SEAL

molex

DOCUMENT NO.: SD-34899-6001
SHEET NO.: 8 OF 11

SIZE: D

THIS DRAWING CONTAINS INFORMATION THAT IS PROPRIETARY TO MOLEX INCORPORATED AND SHOULD NOT BE USED WITHOUT WRITTEN PERMISSION

1x4 BLADE SEALED ASSEMBLY BOM
FOR WIRE DRESS COVER INTERFACE 2
REFER WIRE DRESS INTERFACE SHEET
FOR DETAILS

ASSEMBLY DESCRIPTION	ASSEMBLY PART NUMBER																	PRODUCTION TOOL STATUS	COMMENTS
KEYING OPTION A, 40G CLIP SLOT, BLACK	34899-4060																A	TOOLED BUT NOT VALIDATED	
KEYING OPTION A, 40G CLIP SLOT, YELLOW	34899-4050															A		TOOLED BUT NOT VALIDATED	
KEYING OPTION G, 7mm CLIP SLOT, LIGHT GRAY	34899-4086														G			SALEABLE	
KEYING OPTION F, 7mm CLIP SLOT, BLACK	34899-4085													F				SALEABLE	
KEYING OPTION E, 7mm CLIP SLOT, DARK GRAY	34899-4084												E					SALEABLE	
KEYING OPTION D, 7mm CLIP SLOT, LIGHT GRAY	34899-4083											D						SALEABLE	
KEYING OPTION C, 7mm CLIP SLOT, DARK GRAY	34899-4082										C							SALEABLE	
KEYING OPTION B, 7mm CLIP SLOT, STONE GRAY	34899-4081									B								SALEABLE	
KEYING OPTION A, 7mm CLIP SLOT, BLACK	34899-4080								A									SALEABLE	
KEYING OPTION G, 7mm CLIP SLOT, YELLOW	34899-4076							G										SALEABLE	
KEYING OPTION F, 7mm CLIP SLOT, YELLOW	34899-4075						F											SALEABLE	
KEYING OPTION E, 7mm CLIP SLOT, YELLOW	34899-4074					E												SALEABLE	
KEYING OPTION D, 7mm CLIP SLOT, YELLOW	34899-4073				D													SALEABLE	
KEYING OPTION C, 7mm CLIP SLOT, YELLOW	34899-4072			C														SALEABLE	
KEYING OPTION B, 7mm CLIP SLOT, YELLOW	34899-4071		B															SALEABLE	
KEYING OPTION A, 7mm CLIP SLOT, YELLOW	34899-4070	A																SALEABLE	

DESCRIPTION	COLOR	MATERIAL
PLR	NATURAL	SPS/NYLON GF20
1x4 CONNECTOR HOUSING, KEYING OPTION A 40G CLIP SLOT	BLACK	SPS/NYLON GF20
1x4 CONNECTOR HOUSING, KEYING OPTION A 40G CLIP SLOT	YELLOW	SPS/NYLON GF20
1x4 CONNECTOR HOUSING, KEYING OPTION G 7mm CLIP SLOT	LIGHT GRAY	SPS/NYLON GF20
1x4 CONNECTOR HOUSING, KEYING OPTION F 7mm CLIP SLOT	BLACK	SPS/NYLON GF20
1x4 CONNECTOR HOUSING, KEYING OPTION E 7mm CLIP SLOT	DARK GRAY	SPS/NYLON GF20
1x4 CONNECTOR HOUSING, KEYING OPTION D 7mm CLIP SLOT	LIGHT GRAY	SPS/NYLON GF20
1x4 CONNECTOR HOUSING, KEYING OPTION C 7mm CLIP SLOT	DARK GRAY	SPS/NYLON GF20
1x4 CONNECTOR HOUSING, KEYING OPTION B 7mm CLIP SLOT	STONE GRAY	SPS/NYLON GF20
1x4 CONNECTOR HOUSING, KEYING OPTION A 7mm CLIP SLOT	BLACK	SPS/NYLON GF20
1x4 CONNECTOR HOUSING, KEYING OPTION G 7mm CLIP SLOT	YELLOW	SPS/NYLON GF20
1x4 CONNECTOR HOUSING, KEYING OPTION F 7mm CLIP SLOT	YELLOW	SPS/NYLON GF20
1x4 CONNECTOR HOUSING, KEYING OPTION E 7mm CLIP SLOT	YELLOW	SPS/NYLON GF20
1x4 CONNECTOR HOUSING, KEYING OPTION D 7mm CLIP SLOT	YELLOW	SPS/NYLON GF20
1x4 CONNECTOR HOUSING, KEYING OPTION C 7mm CLIP SLOT	YELLOW	SPS/NYLON GF20
1x4 CONNECTOR HOUSING, KEYING OPTION B 7mm CLIP SLOT	YELLOW	SPS/NYLON GF20
1x4 CONNECTOR HOUSING, KEYING OPTION A 7mm CLIP SLOT	YELLOW	SPS/NYLON GF20

BOM/APPLICABLE COMPONENTS TABLE

LEGEND TABLE	
ABREVIATION	COMPONENT
A	CONNECTOR HOUSING KEYING OPTION A
B	CONNECTOR HOUSING KEYING OPTION B
C	CONNECTOR HOUSING KEYING OPTION C
D	CONNECTOR HOUSING KEYING OPTION D
E	CONNECTOR HOUSING KEYING OPTION E
F	CONNECTOR HOUSING KEYING OPTION F
G	CONNECTOR HOUSING KEYING OPTION G
PLR	PLR

ENTER DESCRIPTION
EC NO: UAU2016-1803 2016/06/01
DRWN:MKOWALSKY 2016/06/15
CHKD:
APPR:KOEKOSKI
DESCRIPTION
B15
REV

QUALITY SYMBOLS
=0
=0
=0

GENERAL TOLERANCES (UNLESS SPECIFIED)

	mm	INCH
4 PLACES	± ---	± ---
3 PLACES	± ---	± ---
2 PLACES	± 0.10	± ---
1 PLACE	± 0.20	± ---
0 PLACE	± 0.50	±

ANGULAR ± 3 °
DRAFT WHERE APPLICABLE MUST REMAIN WITHIN DIMENSIONS

DIMENSION STYLE: MM ONLY
SCALE
DESIGN UNITS: METRIC
THIRD ANGLE PROJECTION

		DATE
DRAWN BY	MVANSLAMBROU	2012/07/13
CHECKED BY	VKOSHY	2012/07/19
APPROVED BY	VKOSHY	2012/07/24

MATERIAL NO.: SEE BOM

TITLE: 1.2MM 1X4, 1X6 BLADE SEALED ASSEMBLY CABLE SEAL

molex

DOCUMENT NO.: SD-34899-6001
SHEET NO.: 9 OF 11

SIZE: D

THIS DRAWING CONTAINS INFORMATION THAT IS PROPRIETARY TO MOLEX INCORPORATED AND SHOULD NOT BE USED WITHOUT WRITTEN PERMISSION

1x6 BLADE SEALED ASSEMBLY BOM
FOR WIRE DRESS COVER INTERFACE 1
REFER WIRE DRESS INTERFACE SHEET
FOR DETAILS

ASSEMBLY DESCRIPTION	ASSEMBLY PART NUMBER	A	B	C	D	A	B	C	D	A	B	C	D	A	B	C	D	A	PRODUCTION TOOL STATUS	COMMENTS
KEYING OPTION A, 40G CLIP SLOT, BLACK	34899-6070																	A	CONCEPT	
KEYING OPTION A, 40G CLIP SLOT, YELLOW	34899-6050																	A	CONCEPT	
KEYING OPTION D, 11mm CLIP SLOT, STONE GRAY	34899-6063																D		SALEABLE	
KEYING OPTION C, 11mm CLIP SLOT, DARK GRAY	34899-6062															C			SALEABLE	
KEYING OPTION B, 11mm CLIP SLOT, LIGHT GRAY	34899-6061														B				SALEABLE	
KEYING OPTION A, 11mm CLIP SLOT, BLACK	34899-6060													A					SALEABLE	
KEYING OPTION D, 11mm CLIP SLOT, YELLOW	34899-6043												D						SALEABLE	
KEYING OPTION C, 11mm CLIP SLOT, YELLOW	34899-6042											C							SALEABLE	
KEYING OPTION B, 11mm CLIP SLOT, YELLOW	34899-6041										B								SALEABLE	
KEYING OPTION A, 11mm CLIP SLOT, YELLOW	34899-6040									A									SALEABLE	
KEYING OPTION D, 7mm CLIP SLOT, STONE GRAY	34899-6023								D										SALEABLE	
KEYING OPTION C, 7mm CLIP SLOT, DARK GRAY	34899-6022							C											SALEABLE	
KEYING OPTION B, 7mm CLIP SLOT, LIGHT GRAY	34899-6021						B												SALEABLE	
KEYING OPTION A, 7mm CLIP SLOT, BLACK	34899-6020					A													SALEABLE	
KEYING OPTION D, 7mm CLIP SLOT, YELLOW	34899-6013				D														SALEABLE	
KEYING OPTION C, 7mm CLIP SLOT, YELLOW	34899-6012			C															SALEABLE	
KEYING OPTION B, 7mm CLIP SLOT, YELLOW	34899-6011		B																SALEABLE	
KEYING OPTION A, 7mm CLIP SLOT, YELLOW	34899-6010	A																	SALEABLE	

DESCRIPTION	COLOR	MATERIAL
PLR	NATURAL	SPS/NYLON GF20
1x6 CONNECTOR HOUSING, KEYING OPTION A 40G CLIP SLOT	BLACK	SPS/NYLON GF20
1x6 CONNECTOR HOUSING, KEYING OPTION A 40G CLIP SLOT	YELLOW	SPS/NYLON GF20
1x6 CONNECTOR HOUSING, KEYING OPTION D 11mm CLIP SLOT	STONE GRAY	SPS/NYLON GF20
1x6 CONNECTOR HOUSING, KEYING OPTION C 11mm CLIP SLOT	DARK GRAY	SPS/NYLON GF20
1x6 CONNECTOR HOUSING, KEYING OPTION B 11mm CLIP SLOT	LIGHT GRAY	SPS/NYLON GF20
1x6 CONNECTOR HOUSING, KEYING OPTION A 11mm CLIP SLOT	BLACK	SPS/NYLON GF20
1x6 CONNECTOR HOUSING, KEYING OPTION D 11mm CLIP SLOT	YELLOW	SPS/NYLON GF20
1x6 CONNECTOR HOUSING, KEYING OPTION C 11mm CLIP SLOT	YELLOW	SPS/NYLON GF20
1x6 CONNECTOR HOUSING, KEYING OPTION B 11mm CLIP SLOT	YELLOW	SPS/NYLON GF20
1x6 CONNECTOR HOUSING, KEYING OPTION A 11mm CLIP SLOT	YELLOW	SPS/NYLON GF20
1x6 CONNECTOR HOUSING, KEYING OPTION D 7mm CLIP SLOT	STONE GRAY	SPS/NYLON GF20
1x6 CONNECTOR HOUSING, KEYING OPTION C 7mm CLIP SLOT	DARK GRAY	SPS/NYLON GF20
1x6 CONNECTOR HOUSING, KEYING OPTION B 7mm CLIP SLOT	LIGHT GRAY	SPS/NYLON GF20
1x6 CONNECTOR HOUSING, KEYING OPTION A 7mm CLIP SLOT	BLACK	SPS/NYLON GF20
1x6 CONNECTOR HOUSING, KEYING OPTION D 7mm CLIP SLOT	YELLOW	SPS/NYLON GF20
1x6 CONNECTOR HOUSING, KEYING OPTION C 7mm CLIP SLOT	YELLOW	SPS/NYLON GF20
1x6 CONNECTOR HOUSING, KEYING OPTION B 7mm CLIP SLOT	YELLOW	SPS/NYLON GF20
1x6 CONNECTOR HOUSING, KEYING OPTION A 7mm CLIP SLOT	YELLOW	SPS/NYLON GF20

BOM/APPLICABLE COMPONENTS TABLE

LEGEND TABLE	
ABREVIATION	COMPONENT
A	CONNECTOR HOUSING KEYING OPTION A
B	CONNECTOR HOUSING KEYING OPTION B
C	CONNECTOR HOUSING KEYING OPTION C
D	CONNECTOR HOUSING KEYING OPTION D
PLR	PLR

ENTER DESCRIPTION
EC NO: UAU2016-1803 2016/06/01
DRWN:MKOWALSKY 2016/06/15
CHKD:
APPR:KOEKOSKI
DESCRIPTION
B15
REV

QUALITY SYMBOLS: =0, =0, =0

GENERAL TOLERANCES (UNLESS SPECIFIED)

	mm	INCH
4 PLACES	± ---	± ---
3 PLACES	± ---	± ---
2 PLACES	± 0.10	± ---
1 PLACE	± 0.20	± ---
0 PLACE	± 0.50	±

ANGULAR ± 3 °
DRAFT WHERE APPLICABLE MUST REMAIN WITHIN DIMENSIONS

DIMENSION STYLE: MM ONLY
SCALE: 2:1
DESIGN UNITS: METRIC
THIRD ANGLE PROJECTION

DRAWN BY: MVANSLAMBROU DATE: 2012/07/13
CHECKED BY: VKOSHY DATE: 2012/07/19
APPROVED BY: VKOSHY DATE: 2012/07/24

TITLE: 1.2MM 1X4, 1X6 BLADE SEALED ASSEMBLY CABLE SEAL

molex

MATERIAL NO.: SEE BOM
DOCUMENT NO.: SD-34899-6001
SHEET NO.: 10 OF 11
SIZE: D

THIS DRAWING CONTAINS INFORMATION THAT IS PROPRIETARY TO MOLEX INCORPORATED AND SHOULD NOT BE USED WITHOUT WRITTEN PERMISSION

1x6 BLADE SEALED ASSEMBLY BOM
FOR WIRE DRESS COVER INTERFACE 2
REFER WIRE DRESS INTERFACE SHEET
FOR DETAILS

ASSEMBLY DESCRIPTION	ASSEMBLY PART NUMBER	A	B	C	D	A	B	C	D	A	B	C	D	A	B	C	D	PRODUCTION TOOL STATUS	COMMENTS
KEYING OPTION D, 11mm CLIP SLOT, STONE GRAY	34899-6123																D	SALEABLE	
KEYING OPTION C, 11mm CLIP SLOT, DARK GRAY	34899-6122															C		SALEABLE	
KEYING OPTION B, 11mm CLIP SLOT, LIGHT GRAY	34899-6121														B			SALEABLE	
KEYING OPTION A, 11mm CLIP SLOT, BLACK	34899-6120													A				SALEABLE	
KEYING OPTION D, 11mm CLIP SLOT, YELLOW	34899-6113												D					SALEABLE	
KEYING OPTION C, 11mm CLIP SLOT, YELLOW	34899-6112											C						SALEABLE	
KEYING OPTION B, 11mm CLIP SLOT, YELLOW	34899-6111										B							SALEABLE	
KEYING OPTION A, 11mm CLIP SLOT, YELLOW	34899-6110									A								SALEABLE	
KEYING OPTION D, 7mm CLIP SLOT, STONE GRAY	34899-6093								D									SALEABLE	
KEYING OPTION C, 7mm CLIP SLOT, DARK GRAY	34899-6092							C										SALEABLE	
KEYING OPTION B, 7mm CLIP SLOT, LIGHT GRAY	34899-6091						B											SALEABLE	
KEYING OPTION A, 7mm CLIP SLOT, BLACK	34899-6090					A												SALEABLE	
KEYING OPTION D, 7mm CLIP SLOT, YELLOW	34899-6083				D													SALEABLE	
KEYING OPTION C, 7mm CLIP SLOT, YELLOW	34899-6082			C														SALEABLE	
KEYING OPTION B, 7mm CLIP SLOT, YELLOW	34899-6081		B															SALEABLE	
KEYING OPTION A, 7mm CLIP SLOT, YELLOW	34899-6080	A																SALEABLE	

DESCRIPTION	COLOR	MATERIAL
PLR	NATURAL	SPS/NYLON GF20
1x6 CONNECTOR HOUSING, KEYING OPTION D 11mm CLIP SLOT	STONE GRAY	SPS/NYLON GF20
1x6 CONNECTOR HOUSING, KEYING OPTION C 11mm CLIP SLOT	DARK GRAY	SPS/NYLON GF20
1x6 CONNECTOR HOUSING, KEYING OPTION B 11mm CLIP SLOT	LIGHT GRAY	SPS/NYLON GF20
1x6 CONNECTOR HOUSING, KEYING OPTION A 11mm CLIP SLOT	BLACK	SPS/NYLON GF20
1x6 CONNECTOR HOUSING, KEYING OPTION D 11mm CLIP SLOT	YELLOW	SPS/NYLON GF20
1x6 CONNECTOR HOUSING, KEYING OPTION C 11mm CLIP SLOT	YELLOW	SPS/NYLON GF20
1x6 CONNECTOR HOUSING, KEYING OPTION B 11mm CLIP SLOT	YELLOW	SPS/NYLON GF20
1x6 CONNECTOR HOUSING, KEYING OPTION A 11mm CLIP SLOT	YELLOW	SPS/NYLON GF20
1x6 CONNECTOR HOUSING, KEYING OPTION D 7mm CLIP SLOT	STONE GRAY	SPS/NYLON GF20
1x6 CONNECTOR HOUSING, KEYING OPTION C 7mm CLIP SLOT	DARK GRAY	SPS/NYLON GF20
1x6 CONNECTOR HOUSING, KEYING OPTION B 7mm CLIP SLOT	LIGHT GRAY	SPS/NYLON GF20
1x6 CONNECTOR HOUSING, KEYING OPTION A 7mm CLIP SLOT	BLACK	SPS/NYLON GF20
1x6 CONNECTOR HOUSING, KEYING OPTION D 7mm CLIP SLOT	YELLOW	SPS/NYLON GF20
1x6 CONNECTOR HOUSING, KEYING OPTION C 7mm CLIP SLOT	YELLOW	SPS/NYLON GF20
1x6 CONNECTOR HOUSING, KEYING OPTION B 7mm CLIP SLOT	YELLOW	SPS/NYLON GF20
1x6 CONNECTOR HOUSING, KEYING OPTION A 7mm CLIP SLOT	YELLOW	SPS/NYLON GF20

BOM/APPLICABLE COMPONENTS TABLE

LEGEND TABLE	
ABREVIATION	COMPONENT
A	CONNECTOR HOUSING KEYING OPTION A
B	CONNECTOR HOUSING KEYING OPTION B
C	CONNECTOR HOUSING KEYING OPTION C
D	CONNECTOR HOUSING KEYING OPTION D
PLR	PLR

ENTER DESCRIPTION
EC NO: UAU2016-1803 2016/06/01
DRWN:MKOWALSKY 2016/06/15
CHKD:
APPR:KOEKOSKI
DESCRIPTION
B15
REV

QUALITY SYMBOLS
=0
=0
=0

GENERAL TOLERANCES (UNLESS SPECIFIED)

	mm	INCH
4 PLACES	± ---	± ---
3 PLACES	± ---	± ---
2 PLACES	± 0.10	± ---
1 PLACE	± 0.20	± ---
0 PLACE	± 0.50	±

ANGULAR ± 3 °
DRAFT WHERE APPLICABLE MUST REMAIN WITHIN DIMENSIONS

DIMENSION STYLE: MM ONLY
SCALE
DESIGN UNITS: METRIC
THIRD ANGLE PROJECTION

		DATE
DRAWN BY	MVANSLAMBROU	2012/07/13
CHECKED BY	VKOSHY	2012/07/19
APPROVED BY	VKOSHY	2012/07/24

MATERIAL NO.: SEE BOM

TITLE: 1.2MM 1X4, 1X6 BLADE SEALED ASSEMBLY CABLE SEAL

molex

DOCUMENT NO.: SD-34899-6001
SHEET NO.: 11 OF 11
SIZE: D

THIS DRAWING CONTAINS INFORMATION THAT IS PROPRIETARY TO MOLEX INCORPORATED AND SHOULD NOT BE USED WITHOUT WRITTEN PERMISSION

TABLE OF CONTENTS

SHEET NO.	SHEET DESCRIPTION
1	NOTES
2	1x4 RECEPTACLE SEALED ASSEMBLY KEYING CONFIGURATIONS
3	1x6 RECEPTACLE SEALED ASSEMBLY KEYING CONFIGURATIONS
4	RECEPTACLE SEALED ASSEMBLY
5	1x4 RECEPTACLE SEALED ASSEMBLY BOM SHEET
6	1x6 RECEPTACLE SEALED ASSEMBLY BOM SHEET

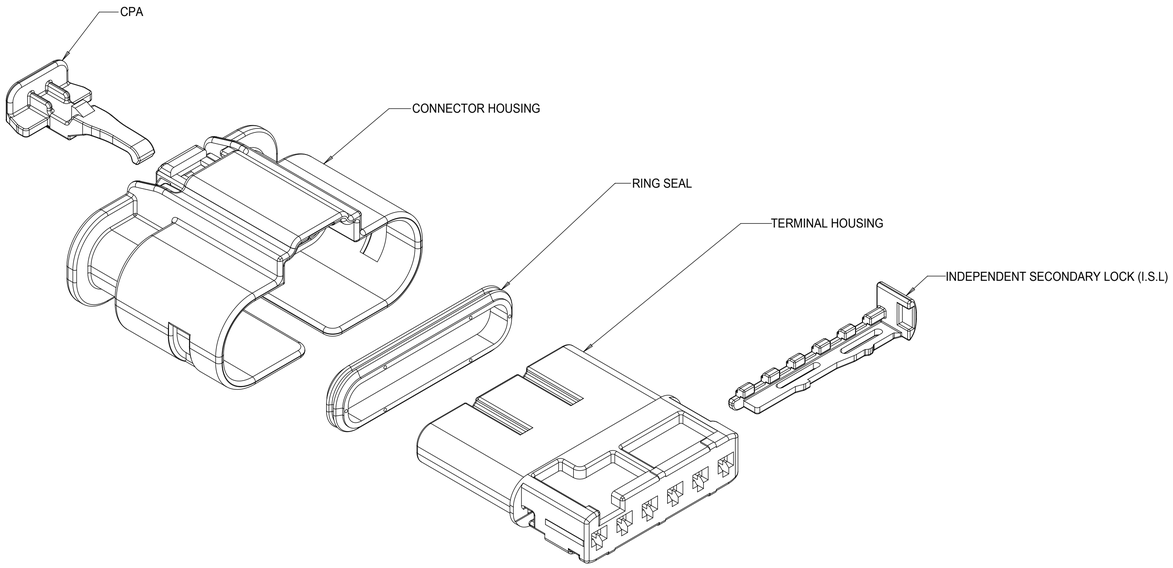

NOTES: VALID UNLESS OTHERWISE SPECIFIED

1. GENERAL:
a. APPLICATION SPECIFICATION SEE: AS-34900-0001
CONTAINS: PRODUCT INTRODUCTION, PRODUCT SUMMARY, CONNECTOR ASSEMBLY, PACKAGING INFORMATION, CONNECTOR MATING, SERVICE INSTRUCTIONS, ELECTRICAL CONTINUITY CHECKING, CRIMPING, AND TROUBLESHOOTING.
b. PRODUCT SPECIFICATION SEE: PS-34900-0001
CONTAINS: PRODUCT INTRODUCTION, PRODUCT SUMMARY, APPROVED TERMINALS, SINGLE WIRE SEALS, RATINGS (CURRENT, TEMPERATURE, SEALING, AND FLAMMABILITY), AND PRODUCT VALIDATION.
c. PACKAGING SPECIFICATION PER MOLEX DRAWING: PK-31301-898
d. PARTS MUST BE IN COMPLIANCE TO MOLEX CHEMICAL SUBSTANCES FOR PRODUCTS AND PACKAGING SPECIFICATION: ES-40000-5016
e. DATA MUST BE SUBMITTED UNDER THE MOLEX PART NUMBER TO IMDS (COMPANY ID#13255)
f. DESIGNED TO MATE WITH DEVICE CONNECTION AS SPECIFIED IN BOM CHART USCAR INTERFACE DRAWINGS AND MODELS ARE AVAILIBLE AT http://ewcap.uscarteams.org/.

2. DESIGN - MATERIALS:
a. SEE BOM TABLE

3. DESIGN - GEOMETRY:
a. THIS IS A 100% CAD GENERATED PART. THE CAD MATHEMATICAL DATA IS THE MASTER FOR THIS PART. FOR DIMENSIONAL OR ANY INFORMATION NOT SHOWN ON THIS DRAWING, ANALYZE THE CAD MODEL.
b. GEOMETRIC DIMENSIONS AND TOLERANCES PER ASME Y14.5M - 1994
c. EDGES AND UNDIMENSIONED DETAILS PER ISO13715
d. CORNERS SHOWN AS SHARP TO BE R 0.2 MAX.
e. LETTERING SHALL BE 0.15 MAX RAISED IN 0.25 MAX RECESS PAD. THIS INCLUDES RECYCLING CODE, CAVITY ID, VENDOR IDENTIFICATION, AND CUSTOMER MATERIAL NUMBER.
f. VISUAL DEFECTS SHALL MEET COSMETIC STANDARD PS-45499-002 (Class B) CAD MODEL.
g. LASER MARKING:
1. PART NUMBER
2. DAY OF THE YEAR
3. SHIFT
4. YEAR

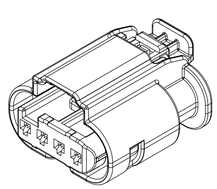

1x4 RECEPTACLE SEALED ASSEMBLY
LONG SHROUD

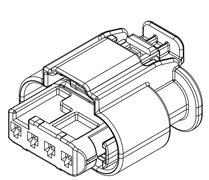

1x4 RECEPTACLE SEALED ASSEMBLY
MID LENGTH SHROUD

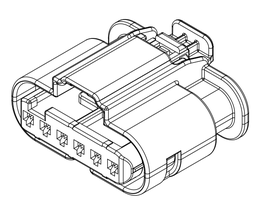

1x6 RECEPTACLE SEALED ASSEMBLY
LONG SHROUD

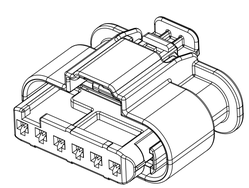

1x6 RECEPTACLE SEALED ASSEMBLY
MID LENGTH SHROUD

REV	DESCRIPTION
A14	UPDATED STATUS, ADDED WIRE DRESS COVERS
A13	NX-REMASTER, ADDED CPA2 PART NUMBERS ABD OBSELETE PAGE
A12	RELEASE ALL KEYS SALEABLE
A11	RELEASE NON SIR SALEABLE
A10	PART #'S WITH NEW LATCH DESIGN SALEABLE
A9	PART #'S WITH NEW LATCH DESIGN SALEABLE
A8	ADDED NEW PART NUMBERS FOR LATCH IMPROVEMENT PARTS
A7	UPDATED 34900-6012 AND 34900-6012 TO SALEBLE
A6	UPDATED SHROUD LENGTH DIMENSION SCHEME
A5	BOM CORRECTIONS AND UPDATES
A4	BOM CORRECTIONS AND UPDATES
A3	NON SIR PART# OK TO TOOL
A2	BOM UPDATES FOR NON-SIR PART #
A1	1X6 MID LENGTH SHROUD OK TO TOOL
A	1X4 INLINE VIEWS ADDED
1	INITIAL RELEASE

QUALITY SYMBOLS
= 0
= 0
= 0
= 0
= 0
= 0
= 0
= 0

THIS DRAWING CONTAINS INFORMATION THAT IS PROPRIETARY TO MOLEX ELECTRONIC TECHNOLOGIES, LLC AND SHOULD NOT BE USED WITHOUT WRITTEN PERMISSION

EC NO: 624282
DRWN: HGIBOR 2019/09/16
CHK'D: KBORUSZEWSKI 2019/09/30
APPR: KBORUSZEWSKI 2019/09/30
REV A14

GENERAL TOLERANCES (UNLESS SPECIFIED)
ANGULAR TOL ± 3.0 °
4 PLACES ±
3 PLACES ±
2 PLACES ± 0.1
1 PLACE ± 0.2
0 PLACES ± 0.5
DRAFT WHERE APPLICABLE MUST REMAIN WITHIN DIMENSIONS

DIMENSION UNITS: mm
SCALE: 3:1
DRWN BY: MVANSLAMBROU DATE: 2012/05/03
CHK'D BY DATE
APPR BY: GGA DATE: 2012/12/13
DRAWING SIZE: D
THIRD ANGLE PROJECTION

molex®

1.2MM 1X4, 1X6 RECPT.
SEALED ASSEMBLY CABLE SEAL

PRODUCT CUSTOMER DRAWING

SERIES	MATERIAL NUMBER	CUSTOMER
34900	SEE TABLE	GENERAL MARKET

DOCUMENT NUMBER	DOC TYPE	DOC PART	SHEET NUMBER
SD-34900-6001	PSD	001	1 OF 7

RELEASE STATUS	P1	RELEASE DATE	2019/09/30 20:42:58

1x4 RECEPTACLE SEALED ASSEMBLY KEYING CONFIGURATIONS. FOR PART NUMBERS REFER TO BOM SHEET.

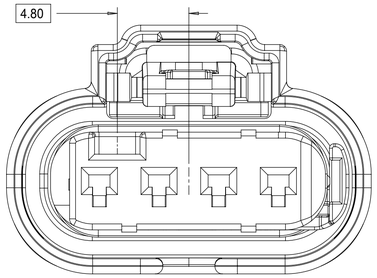

KEYING OPTION A

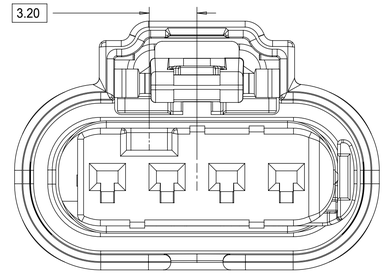

KEYING OPTION E

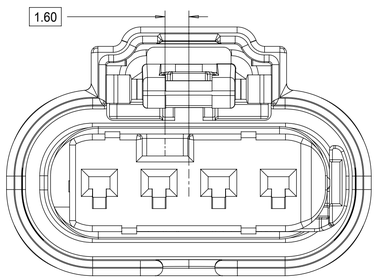

KEYING OPTION B

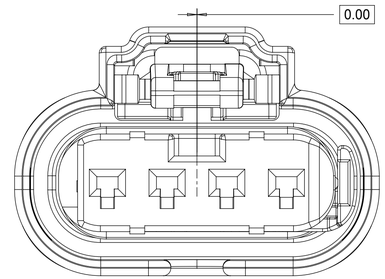

KEYING OPTION F

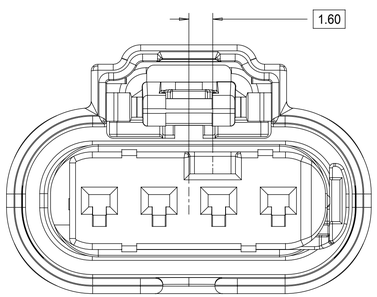

KEYING OPTION C

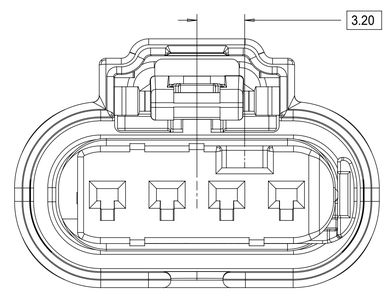

KEYING OPTION G

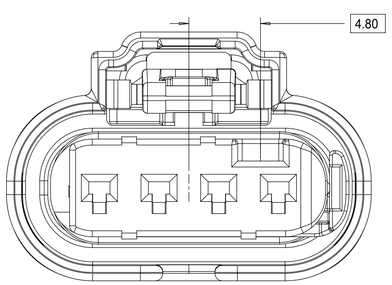

KEYING OPTION D

QUALITY SYMBOLS	
AQL	= 0
AQL	= 0
AQL	= 0
	= 0
C	= 0
	= 0
	= 0
G	= 0

THIS DRAWING CONTAINS INFORMATION THAT IS PROPRIETARY TO MOLEX ELECTRONIC TECHNOLOGIES, LLC AND SHOULD NOT BE USED WITHOUT WRITTEN PERMISSION

EC NO:	624282	2019/09/16
DRWN:	HGIBOR	2019/09/30
CHK'D:	KBORUSZEWSKI	2019/09/30
APPR:	KBORUSZEWSKI	2019/09/30
REV	A14	

GENERAL TOLERANCES (UNLESS SPECIFIED)

ANGULAR TOL ±	3.0	°
4 PLACES	±	
3 PLACES	±	
2 PLACES	±	0.1
1 PLACE	±	0.2
0 PLACES	±	0.5

DRAFT WHERE APPLICABLE MUST REMAIN WITHIN DIMENSIONS

DIMENSION UNITS	mm
SCALE	5:1
DRWN BY	MVANSLAMBROU
DATE	2012/05/03
CHK'D BY	
DATE	
APPR BY	GGA
DATE	2012/12/13
DRAWING SIZE	D
THIRD ANGLE PROJECTION	

molex®

1.2MM 1X4, 1X6 RECPT.
SEALED ASSEMBLY CABLE SEAL

PRODUCT CUSTOMER DRAWING

SERIES	MATERIAL NUMBER	CUSTOMER
34900	SEE BOM	GENERAL MARKET

DOCUMENT NUMBER	DOC TYPE	DOC PART	SHEET NUMBER
SD-34900-6001	PSD	001	2 OF 7

RELEASE STATUS	P1	RELEASE DATE	2019/09/30 20:42:58

TEMPLATE: molex-Size-D
DOCTYPE: DR
DATE: 2017/03/08

1x6 RECEPTACLE SEALED ASSEMBLY KEYING CONFIGURATIONS. FOR PART NUMBERS REFER TO BOM SHEET.

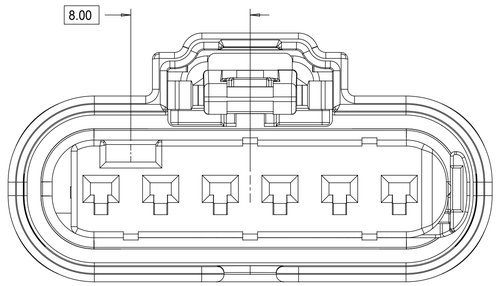

KEYING OPTION A

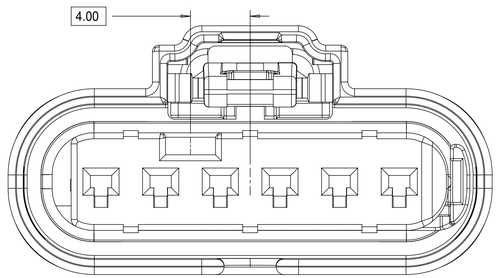

KEYING OPTION B

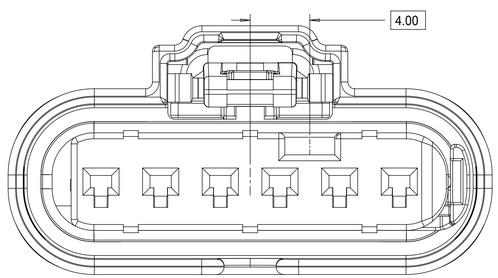

KEYING OPTION C

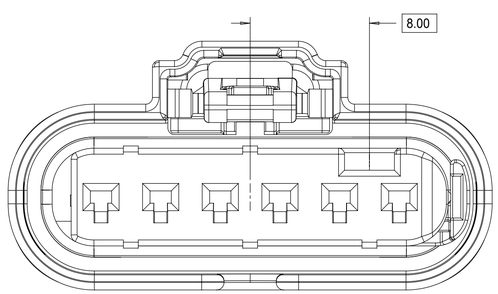

KEYING OPTION D

QUALITY SYMBOLS		
= 0		
= 0		
= 0		
= 0		
= 0		
= 0		
= 0		
= 0		

THIS DRAWING CONTAINS INFORMATION THAT IS PROPRIETARY TO MOLEX ELECTRONIC TECHNOLOGIES, LLC AND SHOULD NOT BE USED WITHOUT WRITTEN PERMISSION

EC NO: 624282 — 2019/09/16
DRWN: HGIBOR — 2019/09/30
CHK'D: KBORUSZEWSKI — 2019/09/30
APPR: KBORUSZEWSKI — 2019/09/30

REV: A14

GENERAL TOLERANCES (UNLESS SPECIFIED)

ANGULAR TOL ±	3.0	°
4 PLACES	±	
3 PLACES	±	
2 PLACES	±	0.1
1 PLACE	±	0.2
0 PLACES	±	0.5

DRAFT WHERE APPLICABLE MUST REMAIN WITHIN DIMENSIONS

DIMENSION UNITS	mm
SCALE	5:1
DRWN BY	MVANSLAMBROU
DATE	2012/05/03
CHK'D BY	
DATE	
APPR BY	GGA
DATE	2012/12/13
DRAWING SIZE	D
THIRD ANGLE PROJECTION	

molex®

1.2MM 1X4, 1X6 RECPT.
SEALED ASSEMBLY CABLE SEAL

PRODUCT CUSTOMER DRAWING

SERIES	MATERIAL NUMBER	CUSTOMER
34900	SEE BOM	GENERAL MARKET

DOCUMENT NUMBER	DOC TYPE	DOC PART	SHEET NUMBER
SD-34900-6001	PSD	001	3 OF 7

RELEASE STATUS	P1	RELEASE DATE	2019/09/30 20:42:58

TEMPLATE: molex-Size-D
DOCTYPE: PSD
DATE: 2017/03/06

RECEPTACLE SEALED ASSEMBLY

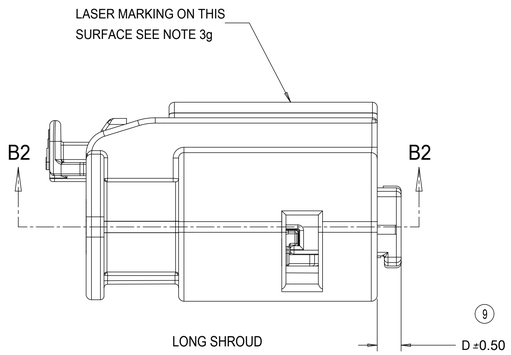

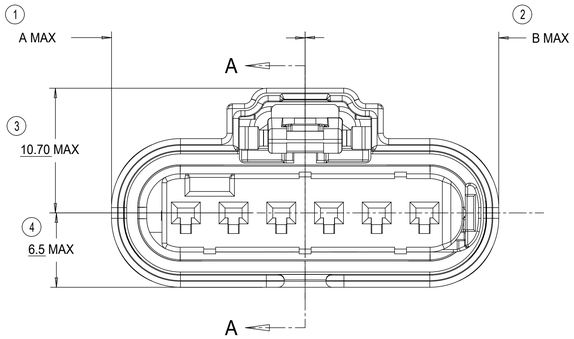

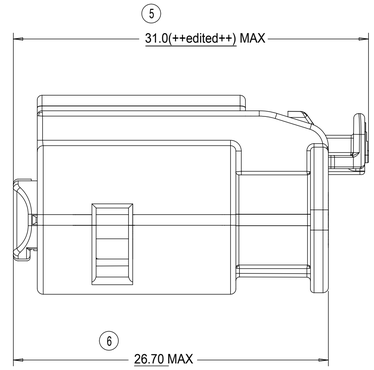

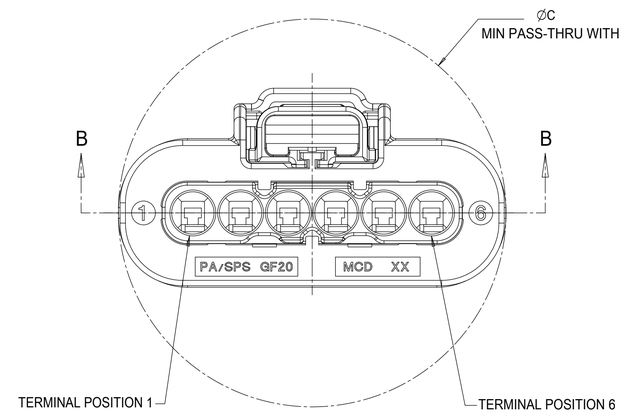

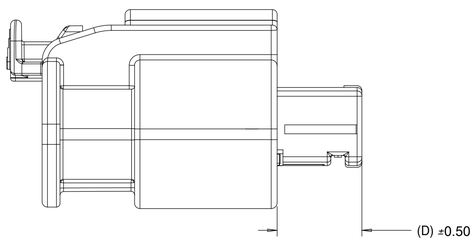

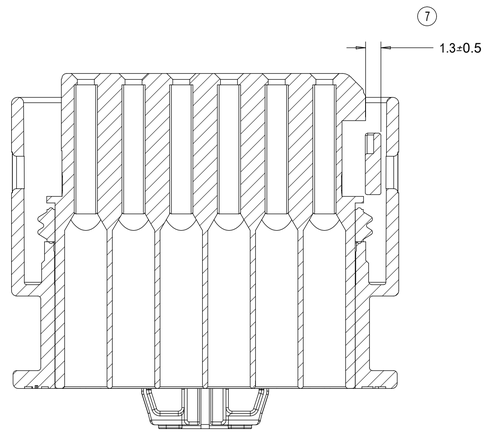

SECTION B-B
INDEPENDENT SECONDARY LOCK (ISL)
SHOWN IN THE PRE-STAGED POSITION

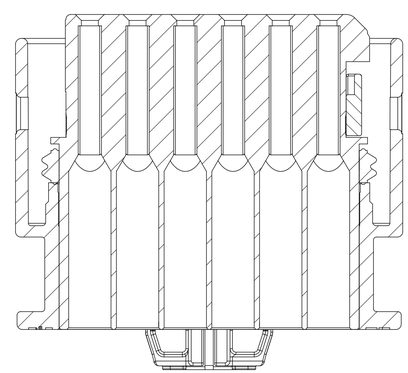

SECTION B2-B2
INDEPENDENT SECONDARY LOCK (ISL)
SHOWN IN THE FINAL-LOCK POSITION

1x6 MID LENGTH SHROUD	16.5	16.5	33.0	6.70
1x4 MID LENGTH SHROUD	16.5	16.5	25.0	6.70
1x6 LONG SHROUD	16.5	16.5	33.0	2.00
1x4 LONG SHROUD	12.5	12.5	25.0	2.00
DESCRIPTION	A	B	C	D

CHARTED DIMENSIONS

QUALITY SYMBOLS
= 0
= 0
= 0
= 0
= 0
= 0
= 0
= 0

THIS DRAWING CONTAINS INFORMATION THAT IS PROPRIETARY TO MOLEX ELECTRONIC TECHNOLOGIES, LLC AND SHOULD NOT BE USED WITHOUT WRITTEN PERMISSION

EC NO: 624282 2019/09/16
DRWN: HGIBOR 2019/09/30
CHK'D: KBORUSZEWSKI 2019/09/30
APPR: KBORUSZEWSKI 2019/09/30

GENERAL TOLERANCES (UNLESS SPECIFIED)
ANGULAR TOL ± 3.0 °
4 PLACES ±
3 PLACES ±
2 PLACES ± 0.1
1 PLACE ± 0.2
0 PLACES ± 0.5
DRAFT WHERE APPLICABLE MUST REMAIN WITHIN DIMENSIONS

REV A14

DIMENSION UNITS: mm
SCALE: 4:1
DRWN BY: MVANSLAMBROU DATE: 2012/05/03
CHK'D BY DATE
APPR BY: GGA DATE: 2012/12/13
DRAWING SIZE: D
THIRD ANGLE PROJECTION

molex®

1.2MM 1X4, 1X6 RECPT.
SEALED ASSEMBLY CABLE SEAL

PRODUCT CUSTOMER DRAWING

SERIES	MATERIAL NUMBER	CUSTOMER
34900	SEE BOM	GENERAL MARKET

DOCUMENT NUMBER	DOC TYPE	DOC PART	SHEET NUMBER
SD-34900-6001	PSD	001	4 OF 7

RELEASE STATUS	P1	RELEASE DATE	2019/09/30 20:42:58

TEMPLATE: molex-Size-D
DOCTYPE: PSD
DATE: 2017/05/08

1X4 RECEPTACLE SEALED ASSEMBLY BOM SHEET 1

ASSEMBLY DESCRIPTION	CONNECTOR HOUSING COLOR	TERMINAL HOUSING COLOR	OUTER HOUSING SHROUD LENGTH	ASSEMBLY PART NUMBER				A	B	C	D	E	F	G	CPA1	CPA2	PRODUCTION TOOL STATUS	COMMENTS	DESIGNED TO MATE WITH DEVICE CONNECTION	
KEY OPTION G	BLACK	LIGHT GRAY	LONG	34900-4226		CHB								G		CPA2	SALEABLE		1	2
KEY OPTION F	BLACK	BLACK	LONG	34900-4225		CHB							F			CPA2	SALEABLE		1	2
KEY OPTION E	BLACK	DARK GRAY	LONG	34900-4224		CHB						E				CPA2	SALEABLE		1	2
KEY OPTION D	BLACK	LIGHT GRAY	LONG	34900-4223		CHB					D					CPA2	SALEABLE		1	2
KEY OPTION C	BLACK	DARK GRAY	LONG	34900-4222		CHB				C						CPA2	SALEABLE		1	2
KEY OPTION B	BLACK	STONE GRAY	LONG	34900-4221		CHB			B							CPA2	SALEABLE		1	2
KEY OPTION A	BLACK	BLACK	LONG	34900-4220		CHB		A								CPA2	SALEABLE		1	2
KEY OPTION G	YELLOW	LIGHT GRAY	LONG	34900-4216	CHY									G		CPA2	SALEABLE		1	2
KEY OPTION F	YELLOW	BLACK	LONG	34900-4215	CHY								F			CPA2	SALEABLE		1	2
KEY OPTION E	YELLOW	DARK GRAY	LONG	34900-4214	CHY							E				CPA2	SALEABLE		1	2
KEY OPTION D	YELLOW	LIGHT GRAY	LONG	34900-4213	CHY						D					CPA2	SALEABLE		1	2
KEY OPTION C	YELLOW	DARK GRAY	LONG	34900-4212	CHY					C						CPA2	SALEABLE		1	2
KEY OPTION B	YELLOW	STONE GRAY	LONG	34900-4211	CHY				B							CPA2	SALEABLE		1	2
KEY OPTION A	YELLOW	BLACK	LONG	34900-4210	CHY			A								CPA2	SALEABLE		1	2
KEY OPTION G	BLACK	LIGHT GRAY	MID LENGTH	34900-4136			CHMB							G		CPA2	CONCEPT		1	2
KEY OPTION F	BLACK	BLACK	MID LENGTH	34900-4135			CHMB						F			CPA2	CONCEPT		1	2
KEY OPTION E	BLACK	DARK GRAY	MID LENGTH	34900-4134			CHMB					E				CPA2	CONCEPT		1	2
KEY OPTION D	BLACK	LIGHT GRAY	MID LENGTH	34900-4133			CHMB				D					CPA2	CONCEPT		1	2
KEY OPTION C	BLACK	DARK GRAY	MID LENGTH	34900-4132			CHMB			C						CPA2	CONCEPT		1	2
KEY OPTION B	BLACK	STONE GRAY	MID LENGTH	34900-4131			CHMB		B							CPA2	CONCEPT		1	2
KEY OPTION A	BLACK	BLACK	MID LENGTH	34900-4130			CHMB	A								CPA2	CONCEPT		1	2
KEY OPTION G	BLACK	LIGHT GRAY	LONG	34900-4126		CHB								G	CPA1		SALEABLE		1	2
KEY OPTION F	BLACK	BLACK	LONG	34900-4125		CHB							F		CPA1		SALEABLE		1	2
KEY OPTION E	BLACK	DARK GRAY	LONG	34900-4124		CHB						E			CPA1		SALEABLE		1	2
KEY OPTION D	BLACK	LIGHT GRAY	LONG	34900-4123		CHB					D				CPA1		SALEABLE		1	2
KEY OPTION C	BLACK	DARK GRAY	LONG	34900-4122		CHB				C					CPA1		SALEABLE		1	2
KEY OPTION B	BLACK	STONE GRAY	LONG	34900-4121		CHB			B						CPA1		SALEABLE		1	2
KEY OPTION A	BLACK	BLACK	LONG	34900-4120		CHB		A							CPA1		SALEABLE		1	2
KEY OPTION G	YELLOW	LIGHT GRAY	LONG	34900-4116	CHY									G	CPA1		SALEABLE		1	2
KEY OPTION F	YELLOW	BLACK	LONG	34900-4115	CHY								F		CPA1		SALEABLE		1	2
KEY OPTION E	YELLOW	DARK GRAY	LONG	34900-4114	CHY							E			CPA1		SALEABLE		1	2
KEY OPTION D	YELLOW	LIGHT GRAY	LONG	34900-4113	CHY						D				CPA1		SALEABLE		1	2
KEY OPTION C	YELLOW	DARK GRAY	LONG	34900-4112	CHY					C					CPA1		SALEABLE		1	2
KEY OPTION B	YELLOW	STONE GRAY	LONG	34900-4111	CHY				B						CPA1		SALEABLE		1	2
KEY OPTION A	YELLOW	BLACK	LONG	34900-4110	CHY			A							CPA1		SALEABLE		1	2

DESCRIPTION	COLOR	MATERIAL	COMMENTS
RING SEAL	LIGHT BLUE	INHERENTLY LUBRICATED SILICONE	
ISL	NATURAL	SPS/NYLON GF20	
CPA2	RED	PBT GF30	
CPA1	RED	PBT GF30	
TERMINAL HOUSING KEYING OPTION G	LIGHT GRAY	SPS/NYLON GF20	
TERMINAL HOUSING KEYING OPTION F	BLACK	SPS/NYLON GF20	
TERMINAL HOUSING KEYING OPTION E	DARK GRAY	SPS/NYLON GF20	
TERMINAL HOUSING KEYING OPTION D	LIGHT GRAY	SPS/NYLON GF20	
TERMINAL HOUSING KEYING OPTION C	DARK GRAY	SPS/NYLON GF20	
TERMINAL HOUSING KEYING OPTION B	STONE GRAY	SPS/NYLON GF20	
TERMINAL HOUSING KEYING OPTION A	BLACK	SPS/NYLON GF20	
MID LENGTH CONNECTOR HOUSING	BLACK	SPS/NYLON GF20	
CONNECTOR HOUSING	BLACK	SPS/NYLON GF20	UPDATED LATCH
CONNECTOR HOUSING	YELLOW	SPS/NYLON GF20	UPDATED LATCH
WIRE DRESS COVER STRAIGHT	BLACK	PA66	SOLD SEPARATELY SEE SD-160091-0001
WIRE DRESS COVER LEFT	BLACK	PA66	
WIRE DRESS COVER RIGHT	BLACK	PA66	

BOM/APPLICABLE COMPONENTS TABLE

LEGEND TABLE

ABREVIATION	COMPONENT
CHY	CONNECTOR HOUSING YELLOW
CHB	CONNECTOR HOUSING BLACK
CHBM	CONNECTOR HOUSING BLACK MID SHROUD
A	TERMINAL HOUSING KEY A
B	TERMINAL HOUSING KEY B
C	TERMINAL HOUSING KEY C
D	TERMINAL HOUSING KEY D
E	TERMINAL HOUSING KEY E
F	TERMINAL HOUSING KEY F
G	TERMINAL HOUSING KEY G
CPA	CPA
ISL	ISL
RING SEAL	RING SEAL
1	USCAR INTERFACE 120-S-004-1-Z02 SEE NOTE 1f FOR WEBSITE
2	MOLEX INLINE BLADE CONNECTOR SD-34899-6001

QUALITY SYMBOLS: = 0 / = 0 / = 0 / = 0 / = 0 / = 0 / = 0 / = 0

THIS DRAWING CONTAINS INFORMATION THAT IS PROPRIETARY TO MOLEX ELECTRONIC TECHNOLOGIES, LLC AND SHOULD NOT BE USED WITHOUT WRITTEN PERMISSION

EC NO: 624282 — DRWN: HGIBOR 2019/09/16 — CHK'D: KBORUSZEWSKI 2019/09/30 — APPR: KBORUSZEWSKI 2019/09/30

REV: A14

GENERAL TOLERANCES (UNLESS SPECIFIED): ANGULAR TOL ± 3.0 °; 4 PLACES ±; 3 PLACES ±; 2 PLACES ± 0.1; 1 PLACE ± 0.2; 0 PLACES ± 0.5

DRAFT WHERE APPLICABLE MUST REMAIN WITHIN DIMENSIONS

DIMENSION UNITS: mm — SCALE: 5:1

DRWN BY: MVANSLAMBROU — DATE: 2012/05/03

CHK'D BY — DATE

APPR BY: GGA — DATE: 2012/12/13

DRAWING SIZE: D — THIRD ANGLE PROJECTION

molex®

1.2MM 1X4, 1X6 RECPT.
SEALED ASSEMBLY CABLE SEAL

PRODUCT CUSTOMER DRAWING

SERIES	MATERIAL NUMBER	CUSTOMER
34900	SEE BOM	GENERAL MARKET

DOCUMENT NUMBER	DOC TYPE	DOC PART	SHEET NUMBER
SD-34900-6001	PSD	001	5 OF 7

RELEASE STATUS	P1	RELEASE DATE	2019/09/30 20:42:58

TEMPLATE: smpdm-landscape.dwt
APPROVED: yes
DATE: 2017/05/08

1X6 RECEPTACLE SEALED ASSEMBLY BOM SHEET 1

ASSEMBLY DESCRIPTION	CONNECTOR HOUSING COLOR	TERMINAL CAVITY COLOR	OUTER HOUSING SHROUD LENGTH	ASSEMBLY PART NUMBER				A	B	C	D	CPA1	CPA2	STATUS	COMMENTS	DESIGNED TO MATE WITH DEVICE CONNECTION		
																1	2	3
KEYING OPTION D	BLACK	STONE GRAY	MID LENGTH	34900-6230			CHMB				D		CPA2	SALEABLE				3
KEYING OPTION C	BLACK	DARK GRAY	MID LENGTH	34900-6221			CHMB			C			CPA2	SALEABLE				3
KEYING OPTION B	BLACK	LIGHT GRAY	MID LENGTH	34900-6228			CHMB		B				CPA2	SALEABLE				3
KEYING OPTION A	BLACK	BLACK	MID LENGTH	34900-6219			CHMB	A					CPA2	SALEABLE				3
KEYING OPTION D	BLACK	STONE GARY	LONG	34900-6243		CHLB					D		CPA2	SALEABLE		1	2	
KEYING OPTION C	BLACK	DARK GRAY	LONG	34900-6242		CHLB				C			CPA2	SALEABLE		1	2	
KEYING OPTION B	BLACK	LIGHT GRAY	LONG	34900-6241		CHLB			B				CPA2	SALEABLE		1	2	
KEYING OPTION A	BLACK	BLACK	LONG	34900-6240		CHLB		A					CPA2	SALEABLE		1	2	
KEYING OPTION D	YELLOW	STONE GRAY	LONG	34900-6213	CHLY						D		CPA2	SALEABLE		1	2	
KEYING OPTION C	YELLOW	DARK GRAY	LONG	34900-6212	CHLY					C			CPA2	SALEABLE		1	2	
KEYING OPTION B	YELLOW	LIGHT GRAY	LONG	34900-6211	CHLY				B				CPA2	SALEABLE		1	2	
KEYING OPTION A	YELLOW	BLACK	LONG	34900-6210	CHLY			A					CPA2	SALEABLE		1	2	
KEYING OPTION D	BLACK	STONE GRAY	MID LENGTH	34900-6130			CHMB				D	CPA1		SALEABLE				3
KEYING OPTION C	BLACK	DARK GRAY	MID LENGTH	34900-6121			CHMB			C		CPA1		SALEABLE				3
KEYING OPTION B	BLACK	LIGHT GRAY	MID LENGTH	34900-6128			CHMB		B			CPA1		SALEABLE				3
KEYING OPTION A	BLACK	BLACK	MID LENGTH	34900-6119			CHMB	A				CPA1		SALEABLE				3
KEYING OPTION D	BLACK	STONE GARY	LONG	34900-6143		CHLB					D	CPA1		SALEABLE		1	2	
KEYING OPTION C	BLACK	DARK GRAY	LONG	34900-6142		CHLB				C		CPA1		SALEABLE		1	2	
KEYING OPTION B	BLACK	LIGHT GRAY	LONG	34900-6141		CHLB			B			CPA1		SALEABLE		1	2	
KEYING OPTION A	BLACK	BLACK	LONG	34900-6140		CHLB		A				CPA1		SALEABLE		1	2	
KEYING OPTION D	YELLOW	STONE GRAY	LONG	34900-6113	CHLY						D	CPA1		SALEABLE		1	2	
KEYING OPTION C	YELLOW	DARK GRAY	LONG	34900-6112	CHLY					C		CPA1		SALEABLE		1	2	
KEYING OPTION B	YELLOW	LIGHT GRAY	LONG	34900-6111	CHLY				B			CPA1		SALEABLE		1	2	
KEYING OPTION A	YELLOW	BLACK	LONG	34900-6110	CHLY			A				CPA1		SALEABLE		1	2	

DESCRIPTION	COLOR	MATERIAL	COMMENTS
RING SEAL	BURNT RED	INHERENTLY LUBRICATED SILICONE	
ISL	NATURAL	SPS/NYLON GF20	
CPA2	RED	PBT GF30	
CPA1	RED	PBT GF30	
TERMINAL HOUSING KEYING OPTION D	STONE GRAY	SPS/NYLON GF20	
TERMINAL HOUSING KEYING OPTION C	DARK GRAY	SPS/NYLON GF20	
TERMINAL HOUSING KEYING OPTION B	LIGHT GRAY	SPS/NYLON GF20	
TERMINAL HOUSING KEYING OPTION A	BLACK	SPS/NYLON GF20	
CONNECTOR HOUSING MID LENGTH	BLACK	SPS/NYLON GF20	UPDATED LATCH
CONNECTOR HOUSING LONG	BLACK	SPS/NYLON GF20	UPDATED LATCH
CONNECTOR HOUSING LONG	YELLOW	SPS/NYLON GF20	UPDATED LATCH
WIRE DRESS COVER STRAIGHT	BLACK	PA66	SOLD SEPARATELY SEE SD-160091-0001
WIRE DRESS COVER LEFT	BLACK	PA66	
WIRE DRESS COVER RIGHT	BLACK	PA66	

BOM / APPLICABLE COMPONENTS TABLE

LEGEND TABLE

ABREVIATION	COMPONENT
CHLY	CONNECTOR HOUSING LONG YELLOW
CHLB	CONNECTOR HOUSING LONG BLACK
CHMB	CONNECTOR HOUSING MEDIUM BLACK
A	TERMINAL HOUSING KEY A
B	TERMINAL HOUSING KEY B
C	TERMINAL HOUSING KEY C
D	TERMINAL HOUSING KEY D
CPA	CPA
ISL	ISL
RING SEAL	RING SEAL
1	USCAR INTERFACE 120-S-006-1-Z02 SEE NOTE 1f FOR WEBSITE
2	MOLEX INLINE BLADE CONNECTOR SD-34899-6001
3	USCAR INTERFACE 120-S-006-1-Z04 SEE NOTE 1f FOR WEBSITE

QUALITY SYMBOLS: = 0 / = 0 / = 0 / = 0 / = 0 / = 0 / = 0 / = 0

THIS DRAWING CONTAINS INFORMATION THAT IS PROPRIETARY TO MOLEX ELECTRONIC TECHNOLOGIES, LLC AND SHOULD NOT BE USED WITHOUT WRITTEN PERMISSION

EC NO: 624282 — DRWN: HGIBOR 2019/09/16 — CHK'D: KBORUSZEWSKI 2019/09/30 — APPR: KBORUSZEWSKI 2019/09/30

REV: A14

GENERAL TOLERANCES (UNLESS SPECIFIED)

ANGULAR TOL ±	3.0 °
4 PLACES	±
3 PLACES	±
2 PLACES	± 0.1
1 PLACE	± 0.2
0 PLACES	± 0.5

DRAFT WHERE APPLICABLE MUST REMAIN WITHIN DIMENSIONS

DIMENSION UNITS: mm — SCALE: 2:1

DRWN BY: MVANSLAMBROU — DATE: 2012/05/03

CHK'D BY — DATE

APPR BY: GGA — DATE: 2012/12/13

DRAWING SIZE: D — THIRD ANGLE PROJECTION

molex®

1.2MM 1X4, 1X6 RECPT.
SEALED ASSEMBLY CABLE SEAL

PRODUCT CUSTOMER DRAWING

SERIES	MATERIAL NUMBER	CUSTOMER
34900	SEE TABLE	GENERAL MARKET

DOCUMENT NUMBER	DOC TYPE	DOC PART	SHEET NUMBER
SD-34900-6001	PSD	001	6 OF 7

RELEASE STATUS	P1	RELEASE DATE	2019/09/30 20:42:58

FORMAT: 11X8.5 SIZE D
REVISION: D
DATE: 2017/02/06

OBSELETE PART NUMBERS

ASSEMBLY PART NUMBER	STATUS
34900-4026	OBSELETE
34900-4025	OBSELETE
34900-4024	OBSELETE
34900-4023	OBSELETE
34900-4022	OBSELETE
34900-4021	OBSELETE
34900-4020	OBSELETE
34900-4016	OBSELETE
34900-4015	OBSELETE
34900-4014	OBSELETE
34900-4013	OBSELETE
34900-4012	OBSELETE
34900-4011	OBSELETE
34900-4010	OBSELETE

1X4

ASSEMBLY PART NUMBER	STATUS
34900-6030	OBSELETE
34900-6021	OBSELETE
34900-6028	OBSELETE
34900-6019	OBSELETE
34900-6043	OBSELETE
34900-6042	OBSELETE
34900-6041	OBSELETE
34900-6040	OBSELETE
34900-6013	OBSELETE
34900-6012	OBSELETE
34900-6011	OBSELETE
34900-6010	OBSELETE

1X6

THIS DRAWING CONTAINS INFORMATION THAT IS PROPRIETARY TO MOLEX ELECTRONIC TECHNOLOGIES, LLC AND SHOULD NOT BE USED WITHOUT WRITTEN PERMISSION

DIMENSION UNITS	SCALE
mm	1:1

GENERAL TOLERANCES (UNLESS SPECIFIED)

ANGULAR TOL	±	3.0 °
4 PLACES	±	
3 PLACES	±	
2 PLACES	±	0.1
1 PLACE	±	0.2
0 PLACES	±	0.5

TOOL NUMBER

Material:
Heat treat:
Finish:

CURRENT REV DESC:

EC NO:	624282	
DRWN:	HGIBOR	2019/09/16
CHK'D:	KBORUSZEWSKI	2019/09/30
APPR:	KBORUSZEWSKI	2019/09/30
ORIG DRWN BY:		
MVANSLAMBROU		2012/05/03

THIRD ANGLE PROJECTION | DRAWING: D-SIZE | SERIES: 34900

molex

1.2MM 1X4, 1X6 RECPT.
SEALED ASSEMBLY CABLE SEAL

PRODUCT CUSTOMER DRAWING

DOCUMENT NUMBER	DOC TYPE	DOC PART	REVISION
SD-34900-6001	PSD	001	A14

MATERIAL NUMBER | CUSTOMER: GENERAL MARKET | SHEET NUMBER: 7 OF 7

DOCUMENT STATUS	P1	RELEASE DATE	2019/09/30 20:42:58