MAPX	MODIFICATION	DATE

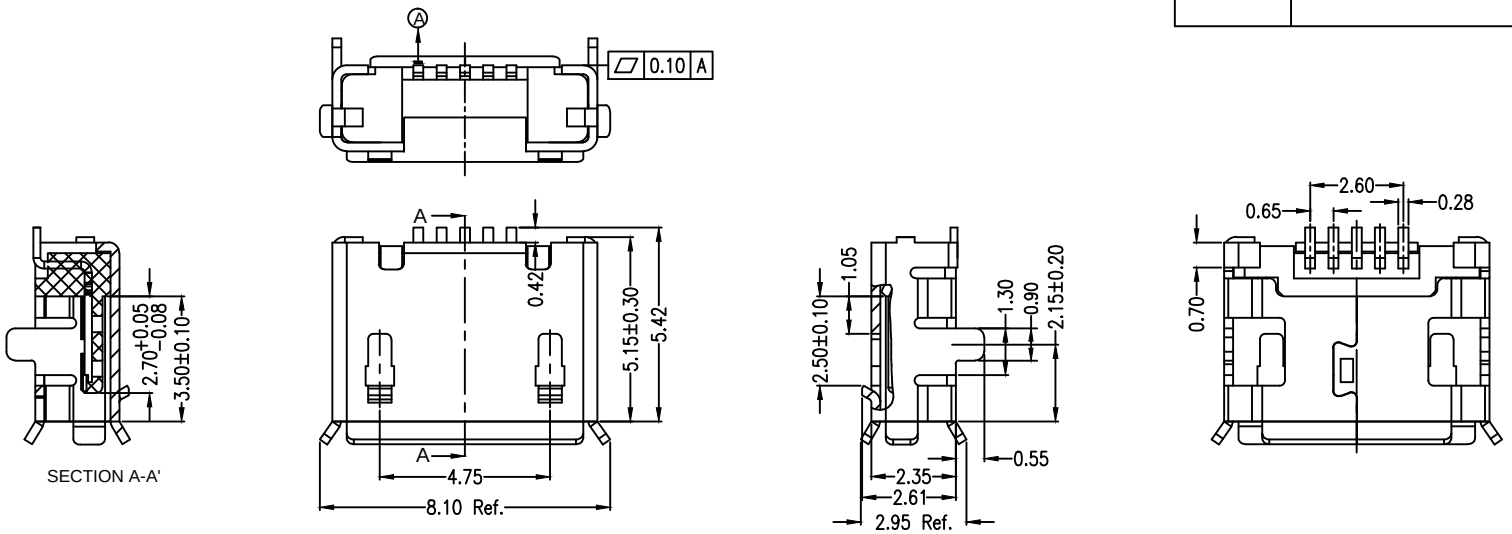

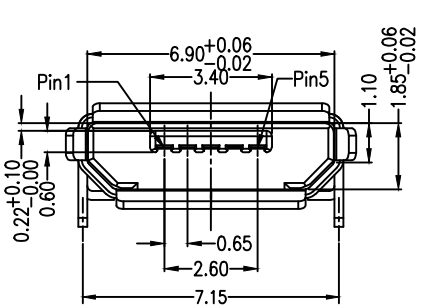

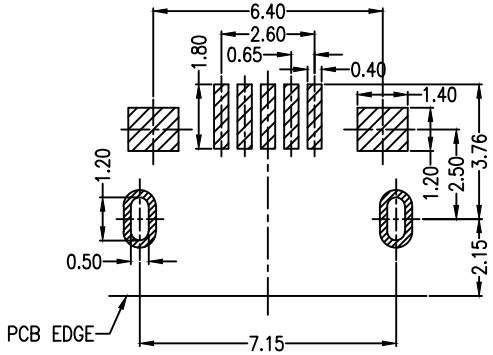

RECOMMANDED PCB LAYOUT

PCB图仅供参考

Note:

1.Material:

1.1 Housing: High temperature thermoplastic with g.f,UL94v-0

1.2 Contact: copper alloy,t=0.20mm

1.3 Shell: copper alloy,t=0.25mm

2.Specification:

2.1 Current rating:1,5PIN 1.8A Max/2,3,4PIN 1A Max.

2.2 Dielectric withstanding voltage: 100 V(ac) for 1 min.

2.3 Contact resistance: 30 mΩ Max.

2.4 Insulation resistance: 100 MΩ Min.

2.5 Total mating force: 3.57 Kgf Max.

2.6 Total unmating force: 1.0 Kgf Min.

2.7 Temperature range: -30°C~80°C

产品图 PRODUCT CHART DWG			深圳市精拓金电子有限公司						
公差一览表 TOLERANCE UNLESS OTHERMSE			单位 UNITS	MM	制图 DRAWING	YANG	制图料号 PRODUCT PART NO.	920-A52A2021S10106	
X.	±0.30	X. ±5.°	比例 SCALE	1:1	审核 CHKD	郭志富	产品名称 PRODUCT NO.	MICRO/5P-F 两脚DIP7.2有边无柱加焊脚端子0.4SMT	
.X	±0.25	.X ±2.°							
.XX	±0.15	.XX ±1.°							
.XXX	±0.10	.XXX ±0.5°	日期 DATE	2019.11.23	核准 APPD	黄国荣	角法 VIEW	版本 VER	A0