Jul.1.2024 Copyright 2024 HIROSE ELECTRIC CO., LTD. All Rights Reserved.
In case of consideration for using Automotive equipment / device which demand high reliability, kindly contact our sales window correspondents.

Polarizing mark
▽Mark shall be processed by chamfering

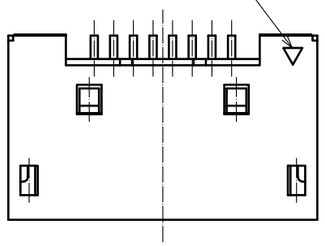

Mated (4:1)

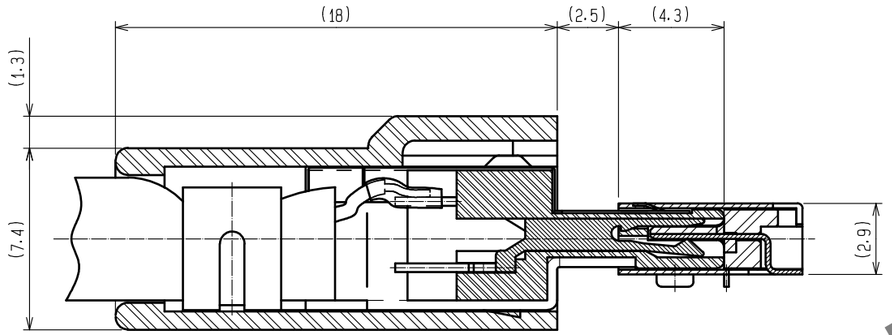

2 Recommended PC Board Pattern
(Mounting side)

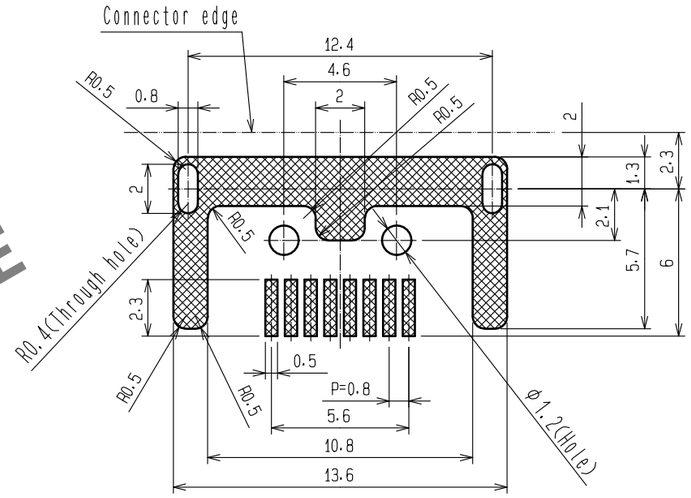

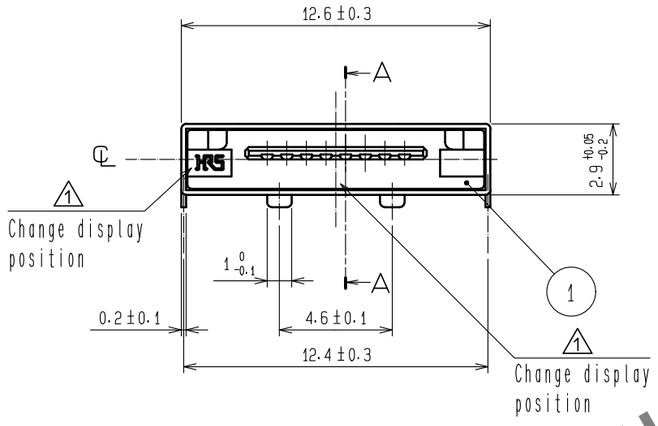

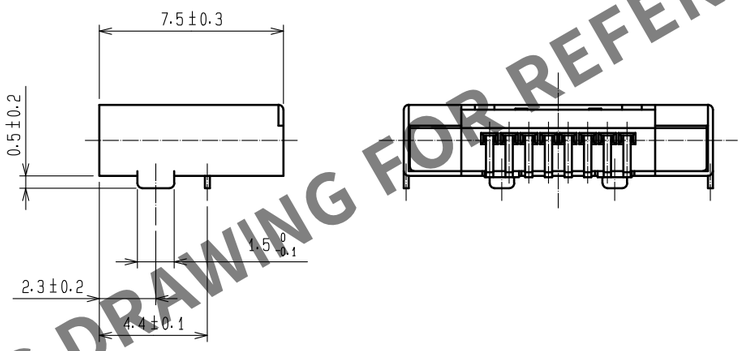

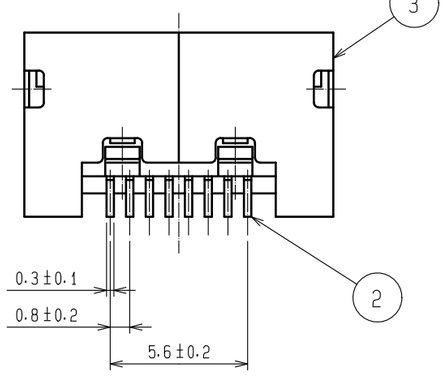

A–A

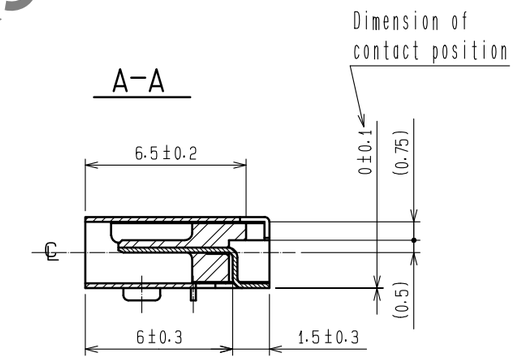

Note 1. Lead coplanarity to be 0.1 max.

2 All dimentions without tolerance are dimentions forreference.

3 Plating
Contact area : Gold 0.2μm min.
Lead area : Gold 0.03μm min.
Under plating : Nickel 2μm min.

4 Plating
Lead area : Gold 0.03μm min.
Under area : Nickel 0.2μm min.

HRS DRAWING FOR REFERENCE

NO.	MATERIAL	FINISH , REMARKS	NO.	MATERIAL	FINISH , REMARKS
1	PPS	BLACK, UL94V-0	3	STAINLESS STEEL	4
			2	PHOSPHOR BRONZE	3

UNITS	SCALE		COUNT	DESCRIPTION OF REVISIONS	DESIGNED	CHECKED	DATE
mm	4 : 1	1	2	DIS-E-00002550	TA. TORIHARA	MN. KENJO	20190920

HRS HIROSE ELECTRIC CO., LTD.

APPROVED	: AO. SUZUKI	20061003	DRAWING NO.	EDC3-045930-02
CHECKED	: NF. MIYAZAKI	20061003	PART NO.	3260-8S1(55)
DESIGNED	: HS. KIKUCHI	20061003	CODE NO.	CL232-0002-7-55
DRAWN	: HS. KIKUCHI	20061003		1/1

FORM HC0011-5-7