THIS DRAWING IS UNPUBLISHED. RELEASED FOR PUBLICATION -.- .
© COPYRIGHT - BY TYCO ELECTRONICS CORPORATION. ALL RIGHTS RESERVED.

LOC	DIST
AD	25

REVISIONS

P	LTR	DESCRIPTION	DATE	DWN	APVD
	O	RELEASE PER EC 0S12-0082-05	27MAY05	JDP	AMS

1. HOUSING: GLASS-FILLED POLYMER.
CONTACT: COPPER ALLOY.
BOARDLOCK: COPPER ALLOY.
2. CONTACT: DIN 41612 CLASS 2 IN CONTACT AREA, TIN PLATE ON POSTS.
BOARDLOCK: TIN PLATE
3. PART NUMBER, DATE CODE IDENTIFICATION, CSA LOGO THIS APPROXIMATE AREA.
4. CONTACT POINT.
5. RECOMMENDED HOLE SIZE FOR MANUAL APPLICATION OF CONNECTOR ONTO PC BOARD.

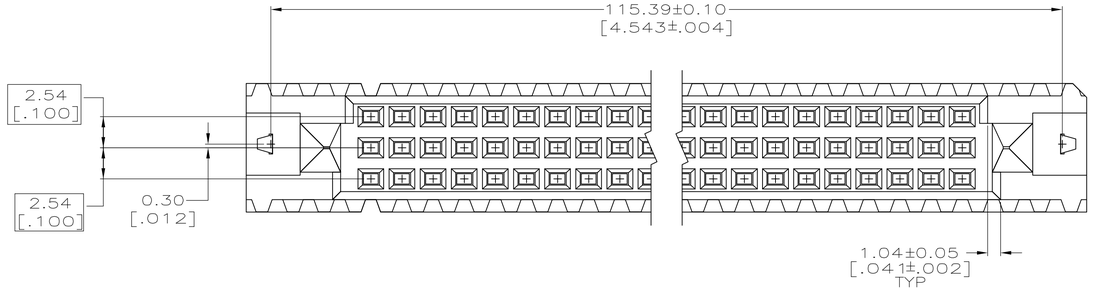

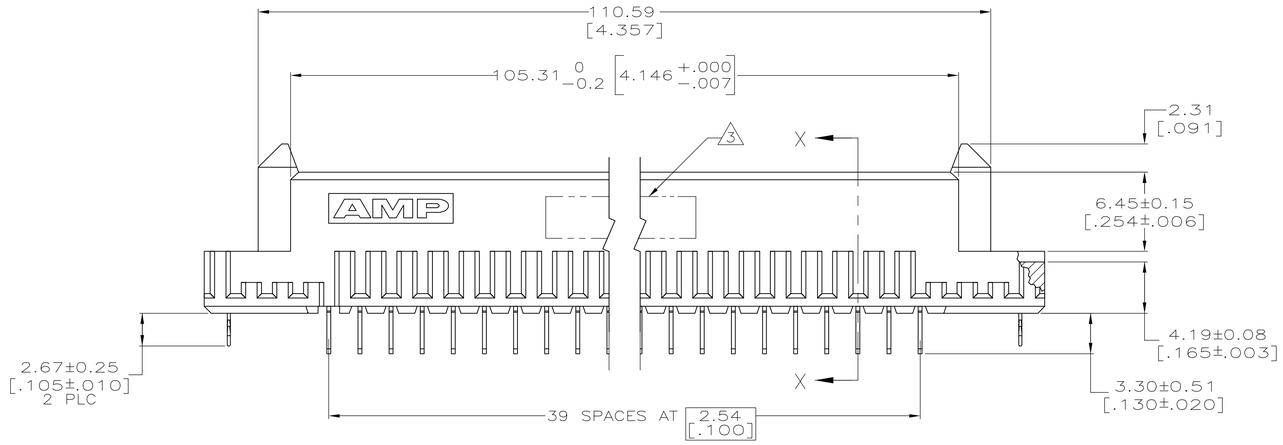

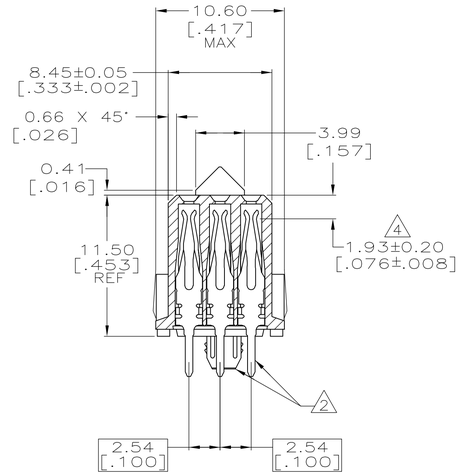

SECTION X-X

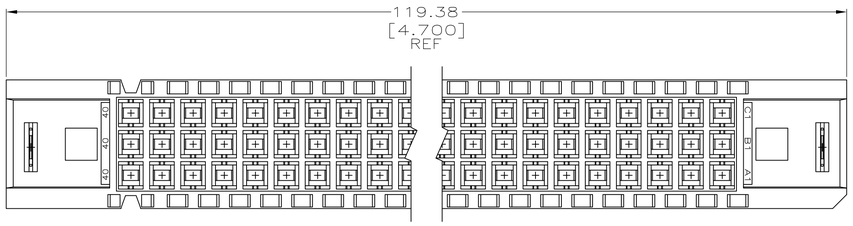

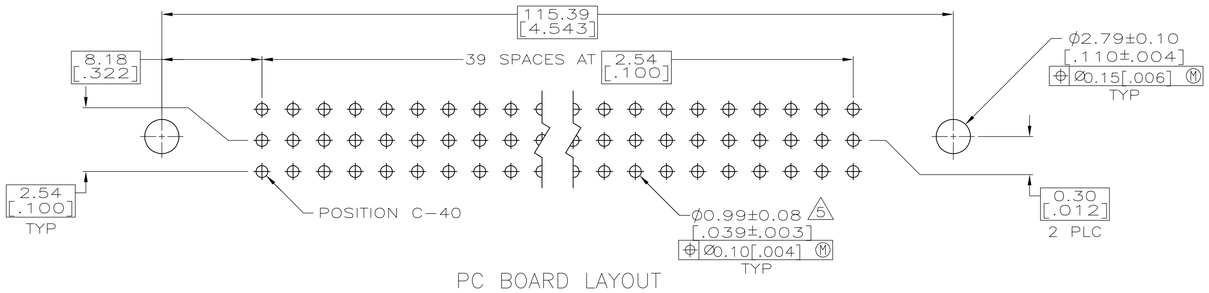

PC BOARD LAYOUT

5148542-5

PART NUMBER

THIS DRAWING IS A CONTROLLED DOCUMENT.

DIMENSIONS: mm [INCHES]

TOLERANCES UNLESS OTHERWISE SPECIFIED:
0 PLC ± -
1 PLC ± -
2 PLC ± 0.13 [.005]
3 PLC ± -
4 PLC ± -
ANGLES ± -

MATERIAL 1
FINISH 2

DWN J. POLIGNONE 27MAY05
CHK A. SHARPE 27MAY05
APVD A. SHARPE 27MAY05

PRODUCT SPEC —
APPLICATION SPEC —
WEIGHT —

tyco Electronics
Tyco Electronics Corporation
Harrisburg, PA 17105-3608

NAME
ASSY, RECEPTACLE, EUROCARD, TYPE C, 120 POSN, 3.30[.130] SOLDER POSTS, GUIDE FEATURES, REVERSE POLARIZATION, BOARDLOCKS

SIZE	CAGE CODE	DRAWING NO	RESTRICTED TO
A1	00779	C-5148542	—

CUSTOMER DRAWING | SCALE 4:1 | SHEET 1 OF 1 | REV O

AMP 4805 REV 31MAR2000

Downloaded from Arrow.com.

H:\dm-tec-mod\5148542_1-c.dwg