THIS DRAWING IS UNPUBLISHED. RELEASED FOR PUBLICATION -,- .
© COPYRIGHT - BY TYCO ELECTRONICS CORPORATION. ALL RIGHTS RESERVED.

LOC	DIST
GP	00

REVISIONS

P	LTR	DESCRIPTION	DATE	DWN	APVD
	O	RELEASED PER EC 0S13-0250-04	19AUG04	JG	CR

1. 20 POSITION CONNECTOR ASSEMBLY SHOWN.
2. MOLDED PARTS: THERMOPLASTIC, UL94V-0 RATED, COLOR BLUE. CONTACTS: BERYLLIUM COPPER.
3. CONTACTS: 0.00076[.000030] MIN GOLD ON MATING AREA, 0.00254-0.00508[.000100-.000200] BRIGHT TIN LEAD ON TERMINATION END, ALL OVER 0.00127[.000050] MIN NICKEL ON ENTIRE CONTACT.
4. POLARIZER FEATURE DOES NOT EXIST ON POSITION #1 END FOR 14 POSITION ASSEMBLIES AND SMALLER.
5. POLARIZER FEATURE DOES NOT EXIST ON THIS END FOR 4 & 6 POSITION ASSEMBLIES.
6. FOR TERMINATION OF 26 OR 28 AWG STRANDED OR SOLID PVC INSULATED FLAT RIBBON CABLE. SEE TYCO DRAWINGS 57034 (26 AWG) OR 57040 (28 AWG) FOR DETAILS.
7. STRAIN RELIEF PACKAGED SEPARATELY AND SHIPPED WITH ASSEMBLY.

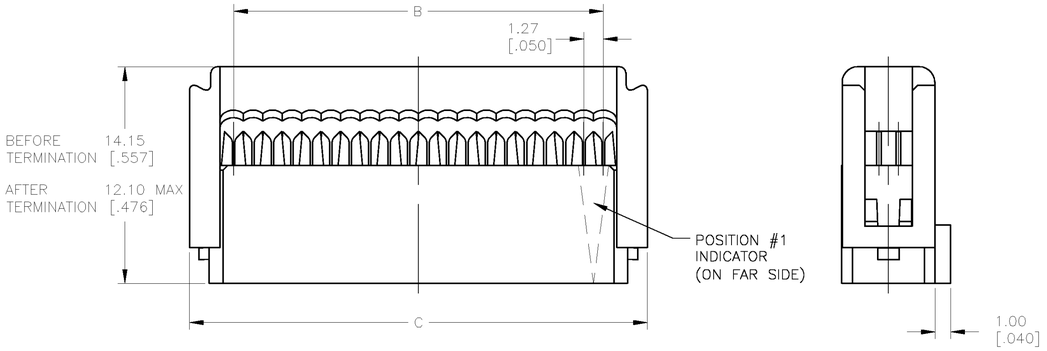

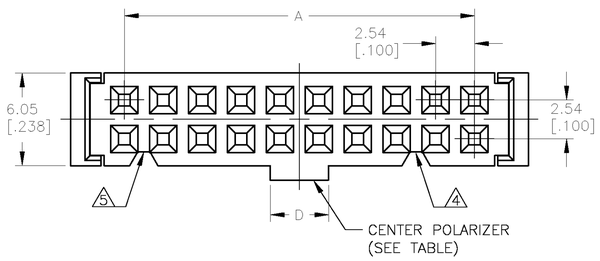

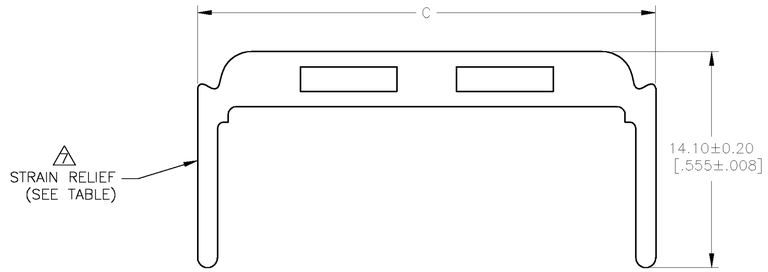

STRAIN RELIEF	CENTER POLARIZER	D	C	B	A	NUMBER OF POSITIONS	T&B PART NUMBER (REFERENCE)	TYCO PART NUMBER
YES	YES	3.80[.150]	85.78[3.377]	80.01[3.150]	78.74[3.100]	64	622-6441	4-1437025-3
NO	YES	3.80[.150]	85.78[3.377]	80.01[3.150]	78.74[3.100]	64	622-6430	3-1437025-7
YES	YES	3.80[.150]	80.70[3.177]	74.93[2.950]	73.66[2.900]	60	622-6041	3-1437025-2
NO	YES	3.80[.150]	80.70[3.177]	74.93[2.950]	73.66[2.900]	60	622-6030	2-1437025-7
NO	YES	3.80[.150]	75.62[2.977]	69.85[2.750]	68.58[2.700]	56	622-5630	2-1437022-9
YES	YES	3.80[.150]	68.00[2.677]	62.23[2.450]	60.95[2.400]	50	622-5041	1-1437025-6
NO	YES	3.80[.150]	68.00[2.677]	62.23[2.450]	60.95[2.400]	50	622-5030	1437025-4
NO	NO	-	60.38[2.377]	54.61[2.150]	53.34[2.100]	44	622-4400	2-1437022-1
YES	YES	3.80[.150]	55.30[2.177]	49.53[1.950]	48.26[1.900]	40	622-4041	8-1437024-6
NO	YES	3.80[.150]	55.30[2.177]	49.53[1.950]	48.26[1.900]	40	622-4030	7-1437024-7
YES	YES	3.80[.150]	47.68[1.877]	41.91[1.650]	40.64[1.600]	34	622-3441	5-1437024-6
NO	YES	3.80[.150]	47.68[1.877]	41.91[1.650]	40.64[1.600]	34	622-3430	4-1437024-8
YES	YES	3.80[.150]	42.60[1.677]	36.83[1.450]	35.56[1.400]	30	622-3041	4-1437024-1
NO	YES	3.80[.150]	42.60[1.677]	36.83[1.450]	35.56[1.400]	30	622-3030	3-1437024-8
YES	YES	3.80[.150]	37.52[1.477]	31.75[1.250]	30.48[1.200]	26	622-2641	3-1437024-0
NO	YES	3.80[.150]	37.52[1.477]	31.75[1.250]	30.48[1.200]	26	622-2630	2-1437024-4
YES	YES	3.80[.150]	34.98[1.377]	29.21[1.150]	27.94[1.100]	24	622-2441	1-1437024-7
NO	YES	3.80[.150]	34.98[1.377]	29.21[1.150]	27.94[1.100]	24	622-2430	1-1437024-4
YES	YES	3.80[.150]	29.90[1.177]	24.13[.950]	22.86[.900]	20	622-2041	1437024-7
NO	YES	3.80[.150]	29.90[1.177]	24.13[.950]	22.86[.900]	20	622-2030	1437024-2
YES	YES	3.80[.150]	24.82[.977]	19.05[.750]	17.78[.700]	16	622-1641	9-1437023-1
NO	YES	3.80[.150]	24.82[.977]	19.05[.750]	17.78[.700]	16	622-1630	8-1437023-3
YES	YES	3.80[.150]	22.28[.877]	16.51[.650]	15.24[.600]	14	622-1441	7-1437023-4
NO	YES	3.80[.150]	22.28[.877]	16.51[.650]	15.24[.600]	14	622-1430	6-1437023-6
YES	YES	3.80[.150]	19.74[.777]	13.97[.550]	12.70[.500]	12	622-1241	5-1437023-9
NO	YES	3.80[.150]	19.74[.777]	13.97[.550]	12.70[.500]	12	622-1230	5-1437023-7
YES	YES	3.20[.126]	17.20[.677]	11.43[.450]	10.16[.400]	10	622-1041	4-1437023-9
NO	YES	3.20[.126]	17.20[.677]	11.43[.450]	10.16[.400]	10	622-1030	4-1437023-1
NO	NO	-	14.66[.577]	8.89[.350]	7.62[.300]	8	622-0800	1-1437022-7
YES	YES	1.90[.075]	12.12[.477]	6.35[.250]	5.08[.200]	6	622-0641	3-1437023-1
NO	YES	1.90[.075]	12.12[.477]	6.35[.250]	5.08[.200]	6	622-0630	2-1437023-6
NO	YES	1.90[.075]	9.58[.377]	3.81[.150]	2.54[.100]	4	622-0430	1-1437023-8

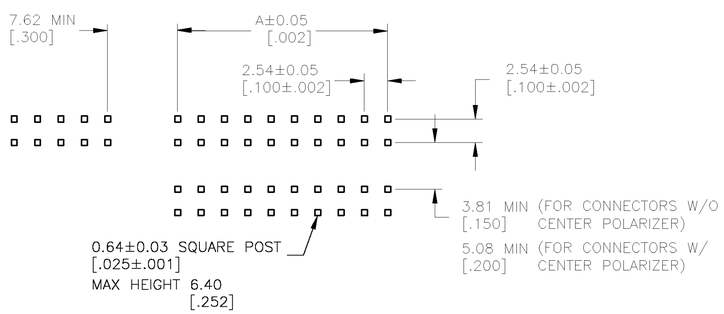

POST LAYOUT

ELECTRICAL PROPERTIES	
CURRENT RATING	1 AMP
INSULATION RESISTANCE	>1 x 10^9 OHMS @ 500 VDC
DWV	>500 VRMS AT SEA LEVEL
ENVIRONMENTAL PROPERTIES	
TEMPERATURE RATING	-55°C TO 125°C

COPYRIGHT 2004
TYCO ELECTRONICS CORP
ALL RIGHTS RESERVED

THIS DRAWING IS A CONTROLLED DOCUMENT.

DIMENSIONS: INCHES

TOLERANCES UNLESS OTHERWISE SPECIFIED:
0 PLC ± -
1 PLC ± -
2 PLC ± -
3 PLC ± 0.13[.005]
4 PLC ± -
ANGLES ± -

MATERIAL 2 FINISH 3

DWN	J.GERACE	19AUG04
CHK	C.ROHDE	19AUG04
APVD	M.WALMSLEY	19AUG04
PRODUCT SPEC	—	
APPLICATION SPEC	—	
WEIGHT	—	
CUSTOMER DRAWING		

Tyco Electronics Corporation
Harrisburg, Pa 17105-3608

CONNECTOR ASSEMBLY, FEMALE SOCKET TRANSITION, 622 SERIES

SIZE	CAGE CODE	DRAWING NO	RESTRICTED TO
A1	00779	C-2-1437022-9	—

SCALE	SHEET	REV
10:1	1 OF 1	O

OBSOLETE
NOT the LATEST
REVISION

Downloaded from Arrow.com.