8P M12 FEMALE

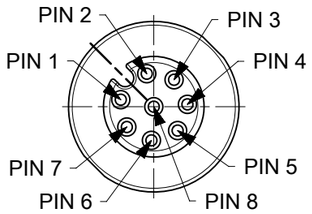

PIN	WIRE COLOR	PIN	WIRE COLOR
1	WH	5	GY
2	BN	6	PK
3	GN	7	BU
4	YE	8	RD

8P M12 MALE

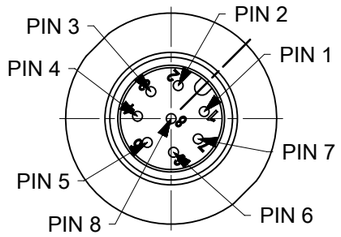

PIN	WIRE COLOR	PIN	WIRE COLOR
1	WH	5	GY
2	BN	6	PK
3	GN	7	BU
4	YE	8	RD

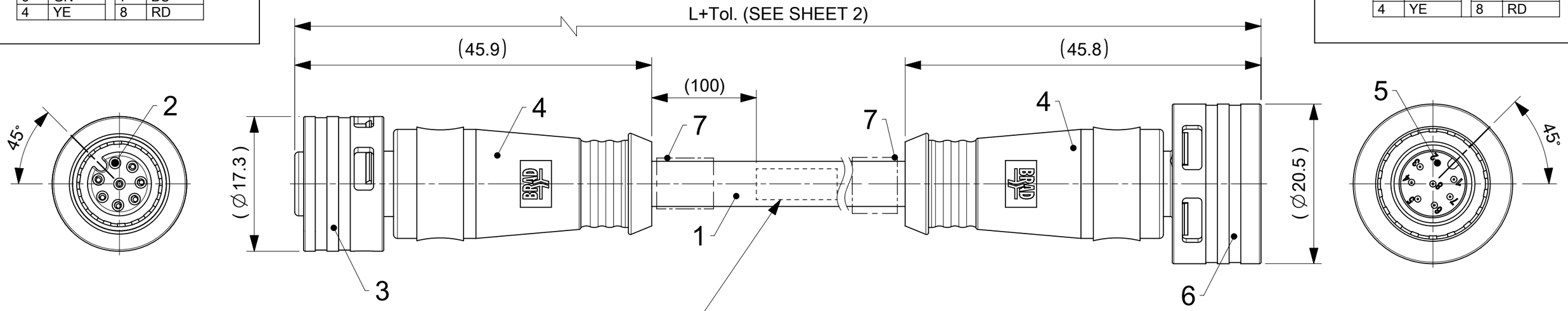

CABLE PRINTING:
"MOLEX" "MOLEX P/N" "ENGINEERING NO." " MX CALENDAR YEAR CALENDAR WEEK"
SECOND PRINT 300mm. AWAY

FOR EXAMPLE: MOLEX 1204010025 YY8030E02M010 MX2038

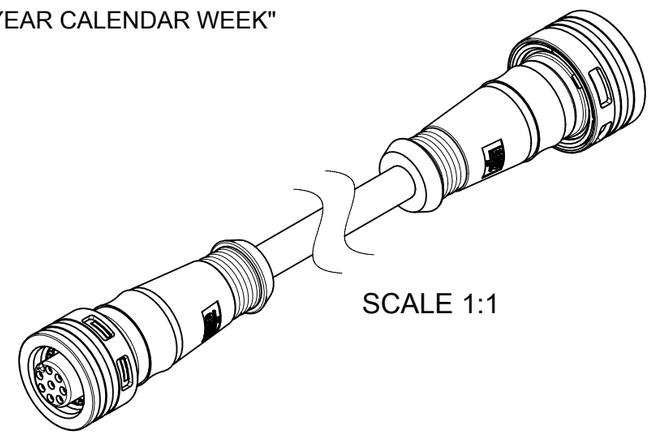

SCALE 1:1

NOTES:
1. PARTS ACC. TO PRODUCT SPECIFICATION 1204000001 PS P10
   AND IN STYLE OF IEC-61076-2-010
2. BOM & PART LIST - SEE SHEET 2
3. RATED VOLTAGE :
   8 CONTACTS: 30V AC OR DC
   RATED CURRENT:
   8 CONTACTS: 2A, DERATING HAS TO BE CONSIDERED
   OVERVOLTAGE CATEGORY: 3
   POLLUTION DEGREE: 3, ONLY IN MATED AND LOCKED CONDITION
4. PROTECTION CLASS: IP 67, ONLY IN MATED AND LOCKED CONDITION
5. TEMPERATURE RANGE:
   TEMPERATURE PLUG/SOCKET: -40 °C TO +85 °C
   TEMPERATURE CABLE: SEE CABLE LIST
6. MECHANICAL OPERATIONS: 100 CYCLES
7. MATES WITH ULTRA-LOCK M12 RECEPTACLES
8. PACKAGING: THE CORDSETS ARE SINGLE PACKED IN PLASTIC BAGS
   AND DELIVERED IN CARTON BOXES
9. UL CSA FILE REGISTRATION PENDING

DOCUMENT STATUS	P1	RELEASE DATE	2023/01/31 08:21:23

THIS DRAWING CONTAINS INFORMATION THAT IS PROPRIETARY TO MOLEX ELECTRONIC TECHNOLOGIES, LLC AND SHOULD NOT BE USED WITHOUT WRITTEN PERMISSION

FUNCTIONAL SYMBOLS: = 0 / = 0 / = 0
DIVISIONAL SYMBOLS

DIMENSION UNITS	SCALE
mm	2:1

GENERAL TOLERANCES (UNLESS SPECIFIED)

ANGULAR TOL	±	1.0 °
4 PLACES	±	
3 PLACES	±	
2 PLACES	±	0.05
1 PLACE	±	0.3
0 PLACES	±	0.5

DRAFT WHERE APPLICABLE MUST REMAIN WITHIN DIMENSIONS

CURRENT REV DESC: NOTES AND CABLE LIST UPDATED

EC NO: 736602
DRWN: RSCHIEBER 2023/01/26
CHK'D: RSILLER 2023/01/31
APPR: RSILLER 2023/01/31

INITIAL REVISION:
DRWN: MDHARMANTI 2021/03/17
APPR: RSILLER 2022/10/14

THIRD ANGLE PROJECTION | DRAWING: A3-SIZE | SERIES: 120401

molex

CSE U12 8P AC FE MA STR XM DE UNSH BK

PRODUCT CUSTOMER DRAWING

DOCUMENT NUMBER	DOC TYPE	DOC PART	REVISION
1204010025	PSD	000	A1

MATERIAL NUMBER	CUSTOMER	SHEET NUMBER
SEE SHEET 2	GENERAL MARKET	1 OF 2

FORMAT: master-Sheet-A3
REVISION: J
DATE: 2020/01/14

PART No MATRIX

Y	Y	X	0	3	0	X	X	X	X	X	X	X	X	X
													OPTIONS	

YY = YY= ULTRA LOCK 2.0 DOUBLE ENDED

X = POLES:
8 = 8 POLES

030 = HEADER :
030= FEMALE STRAIGHT
- MALE STRAIGHT

XXX = CABLE:
E02 - 8x0.25 PVC BLACK
B41 - 8x0.25 WSOR BLACK
H08 - 8x0.25 PUR-LS0H BLACK

X = UNIT:
M = METER
F = FEET
C = CENTIMETER
T = 10M

XXXX = LENGTH:
EXAMPLE:
010 = 1 m
050 = 5 m
100 = 10 m

XX = OPTIONS
OVERMOLD:
BLANK = STANDARD BRAD:
-YELLOW IN THE USA
-BLACK IN EUROPE
A = GREY
E = RED
G = BLACK
Y = YELLOW
H = STD. COLOUR WITH TWO ID-TAG CARRIERS

CABLE LENGTH TOLERANCES	
LENGTH	TOLERANCE
0m-1m	+40 mm
>1m-5m	+60 mm
>5m-10m	+80 mm
>10m-20m	+140 mm
>20m-30m	+160 mm
>30m	+1% length

CABLE LIST

8P	CABLE TYPE	DESCRIPTION	MATERIAL	FINISH/COLOR	FIXED INSTALLATION *		FLEXIBLE INSTALLATION **		DRAG CHAIN	
					MIN.	MAX.	MIN.	MAX.	MIN.	MAX.
X	E02	8X0.25MM;UNSHLD;PVC;BK;OD=6.60MM	PVC	BLACK	-30°C	+80°C	-10°C	+80°C	NOT SUITABLE	
X	B41	CABLE 8X0.25 TPU BK D6.40 TPE UNSH DCS	PUR WSOR	BLACK	-40°C	+90°C	-25°C	+80°C	-5°C	+60°C
X	H08	CABLE PUR;BLK 8X0.25MM-LSOH;UL OD=6.10	PUR-LS0H	BLACK	-40°C	+80°C	-25°C	+80°C	+5°C	+60°C

* FIXED POSITION WITHOUT ACCIDENTAL CRUSHING OF VIBRATION.
** FREE MOTION WITHOUT PERIODIC RECURRENCE OR FORCED GUIDANCE.

PART LIST

MOLEX NO.	ENGINEERING NO.	LENGHT (mm)
1204010025	YY8030E02M010	1000
1204010026	YY8030E02M020	2000
1204010027	YY8030E02M050	5000
1204010028	YY8030E02M100	10000
1204010029	YY8030B41M010	1000
1204010030	YY8030B41M020	2000
1204010031	YY8030B41M050	5000
1204010032	YY8030B41M100	10000
1204010033	YY8030H08M010	1000
1204010034	YY8030H08M020	2000
1204010035	YY8030H08M050	5000
1204010036	YY8030H08M100	10000

BILL OF MATERIAL

ITEM	QTY	DESCRIPTION	MATERIAL	FINISH/COLOR
1	-	CABLE	SEE CABLE LIST	SEE CABLE LIST
2	8	CONTACT 8 FE TUR AU	BRASS	GOLD OVER NICKEL PLATED
3	1	PLG U12 8P AC FE PA UNSH	-	-
4	2	OVERMOLD	TPC	SEE MATRIX
5	8	CONTACT 8 MA TUR AU	BRASS	GOLD OVER NICKEL PLATED
6	1	PLG U12 8P AC MA PA UNSH WT	-	-
7	SEE PN MATRIX *	I/D CARRIER DIA 4-7MMX30MM	PVC	TRANSPARENT

* IF IN MATRIX IS "H" - INDICATES ID-CARRIERS ON THE BOTH SIDES HARNESS

DOCUMENT STATUS	P1	RELEASE DATE	2023/01/31 08:21:23

THIS DRAWING CONTAINS INFORMATION THAT IS PROPRIETARY TO MOLEX ELECTRONIC TECHNOLOGIES, LLC AND SHOULD NOT BE USED WITHOUT WRITTEN PERMISSION

FUNCTIONAL SYMBOLS: FA = 0, FC = 0, FD = 0
DIVISIONAL SYMBOLS

DIMENSION UNITS	SCALE
mm	2:1

GENERAL TOLERANCES (UNLESS SPECIFIED)

ANGULAR TOL	±	1.0 °
4 PLACES	±	
3 PLACES	±	
2 PLACES	±	0.05
1 PLACE	±	0.3
0 PLACES	±	0.5

DRAFT WHERE APPLICABLE MUST REMAIN WITHIN DIMENSIONS

CURRENT REV DESC: NOTES AND CABLE LIST UPDATED

EC NO: 736602
DRWN: RSCHIEBER 2023/01/26
CHK'D: RSILLER 2023/01/31
APPR: RSILLER 2023/01/31

INITIAL REVISION:
DRWN: MDHARMANTI 2021/03/17
APPR: RSILLER 2022/10/14

THIRD ANGLE PROJECTION | DRAWING: A3-SIZE | SERIES: 120401

molex

CSE U12 8P AC FE MA STR XM DE UNSH BK

PRODUCT CUSTOMER DRAWING

DOCUMENT NUMBER	DOC TYPE	DOC PART	REVISION
1204010025	PSD	000	A1

MATERIAL NUMBER	CUSTOMER	SHEET NUMBER
SEE PART LIST	GENERAL MARKET	2 OF 2