P/N
CC
CCSF

REVISIONS				
ZONE	REV	DESCRIPTION	DATE	BY
–	B	ECO 21464	07.23.08	DKN
–	C	ECO 14700	07.15.02	AGS
–	D	ECO 21465	08.05.08	DKN

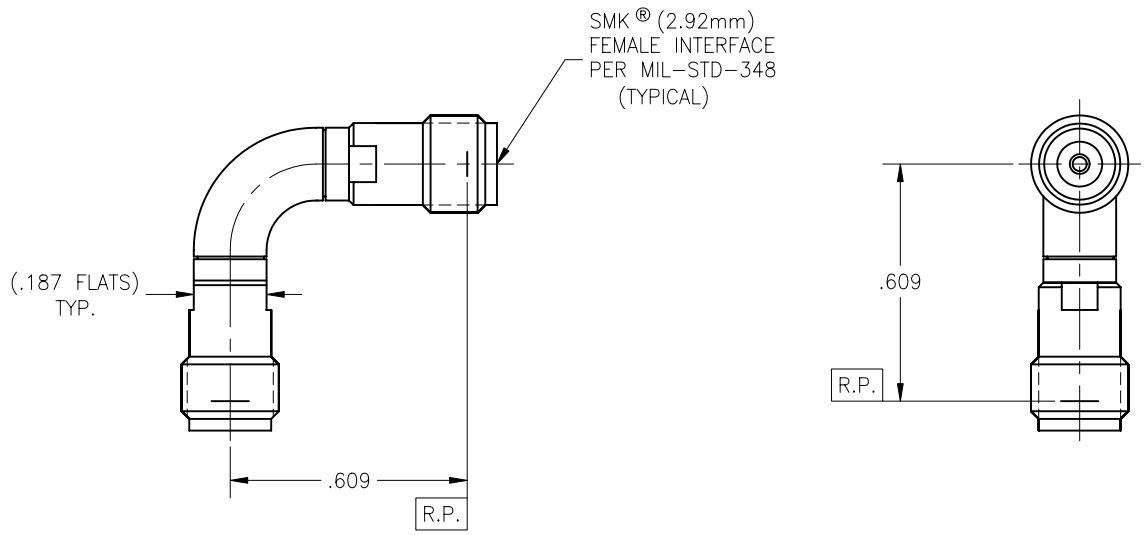

MATERIAL(S):

Body:
303 sst per ASTM A–582.
Right Angle Body:
304 sst per MIL–T–8504
or AMS 5567
Center Conductor:
BeCu alloy per ASTM B–196.
Dielectric:
PTFE per ASTM D–1710.
Bead:
(High Performance Application).
Epoxy:
Sigma Vary Flex type HV.

ELECTRICAL(S):

Impedance: 50 Ohms nominal.
Frequency Range: DC to 40.0 GHz.
VSWR: 1.50:1 Max to 40 GHz.
Insertion Loss: .50 dB max to 40 GHz
Working Voltage: 500 Vrms max @ sea level.
Dielectric Withstanding Voltage: 1500 Vrms min.
R.F. HiPot Voltage: 1000 Vrms min @ 5MHz.
Corona Level: 375 Vrms @ 70,000 ft.
Insulation Resistance: 5000 MegOhms min.
R.F. Leakage: –90 dB min from 2 to 3 GHz
Contact Resistance:
Initial:
Center Contact: 3.0 Milliohm max.
Outer Contact: 2.0 Milliohm max.
After Environment:
Center Contact: 4.0 Milliohm max.
Outer Contact: NA.

MECHANICAL(S):

Mating Characteristics:
Interface per Mil–Std–348.
Force To Engage & Disengage:
Torque: 2 inch–pounds max.
Longitudinal Force: NA.
Center Contact Retention:
Axial Force: 6 pounds min.
Connector Durability:
500 cycles min @ 12 cycles/minute max.
Permeability: Less than 2.0 mu.
Center Contact Captivation:
Axial Force: 6 pounds min.
Torque: 4 inch–ounces min.

ENVIRONMENTAL(S):

Temperature Range: –65°C to +165°C.
Thermal Shock:
Mil–Std–202, Method 107, Test Cond. B.
Temperature Cycle:
Mil–Std–202, Method 102, Test Cond. C.
Moisture Resistance:
Mil–Std–202, Method 106, Insulation resistance at least 200 MegOhms within 5 minutes after removal from humidity.
Corrosion:
Mil–Std–202, Method 101, Test Cond. B.
Vibration:
Mil–Std–202, Method 204, Test Cond. D.
Shock:
Mil–Std–202, Method 213, Test Cond. I.

FINISH(ES):

Body, R/A Body And Coupling Nut:
(for CCSF's) Passivate per ASTM A–967.
(for CC's) Gold plate per ASTM B–488,
over nickel under plate per AMS–QQ–N–290.
Center Conductor:
Gold plate per ASTM B–488, over nickel under plate per AMS–QQ–N–290.

APPLICABLE TENSOLITE DOCUMENTS

WORK STD	PROD INST	ASSY INST
NA	NA	NA

NOTICE

THIS DRAWING EMBODIES A CONFIDENTIAL PROPRIETARY DESIGN ORIGINATED BY TENSOLITE COMPANY AND ALL DESIGN, MANUFACTURING REPRODUCTION, USE AND SALE RIGHTS REGARDING THE SAME ARE EXPRESSLY RESERVED. IT IS SUBMITTED UNDER A CONFIDENTIAL RELATIONSHIP FOR A SPECIFIED PURPOSE AND THE RECIPIENT AGREES BY ACCEPTING THIS DRAWING NOT TO SUPPLY OR DISCLOSE ANY INFORMATION REGARDING IT TO ANY UNAUTHORIZED PERSON TO INCORPORATE IN OTHER PROJECTS ANY SPECIAL FEATURES PECULIAR TO THIS DESIGN. ALL PATENT RIGHTS HERETO ARE EXPRESSLY RESERVED BY TENSOLITE COMPANY, LONG BEACH, CALIFORNIA 90815.

TOLERANCES AND NOTES EXCEPT AS NOTED

DIMENSIONS ARE IN INCHES.
LINEAR .XX ±.015 .XXX ±.005 ANGULAR ± 1/2°
FRACTION ± 1/32

1. MACHINE FINISH: 32 √ RMS
2. BREAK ALL SHARP EDGES .003 MAX.
3. MACHINED FILLETS .005 MAX.
4. MACHINED SURFACES SQUARE TO RESPECTIVE AXIS WITHIN .005 INCHES PER INCH.
5. MACHINED DIAMETERS CONCENTRIC WITHIN .002 T.I.R.
6. DIMENSIONS TO BE MET BEFORE PLATING.
7. CHAMFER ALL THREADS 45°.
8. THREADS PER H–28
9. REMOVE FRAYED EDGES ON TEFLON.
10. REMOVE ALL BURRS.

–	–	–	–
MATERIAL	SIZE	SPECIFICATION	PROCUREMENT

APPROVAL INITIALS		DATE
DRAWN BY	ATV	06.12.097
CHECKED BY		
TEST ENGG		
QUALITY		
DESIGN ENGG	DNG	08.05.08
MFG ENGG		

Tensolite
HIGH PERFORMANCE CABLES & INTERCONNECT SYSTEMS
Long Beach, California 90815

TITLE SMK (2.92mm) MALE TO SMK MALE RADIUS RIGHT ANGLE ADAPTER

SCALE 5:1 | SUB–DIRECTORY\FILENAME OL_\ | SHEET 1 OF 1

SIZE C | CAGE CODE 30990 | DRAWING NO. 222 | REV. D

ENG–DWG REV. B