REV.	ECN NO.	DATE	SIGN	DESCRIPTION
B	LE31780294~303	2017-08-08	Frank Deng	Add Package
C	C180317	2018-12-12	Frank Deng	Change Coiling Size

ALTW
CONFIDENTIAL
2018-12-12
R&D DEPT.

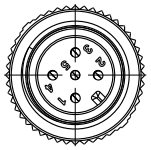

Conn.1

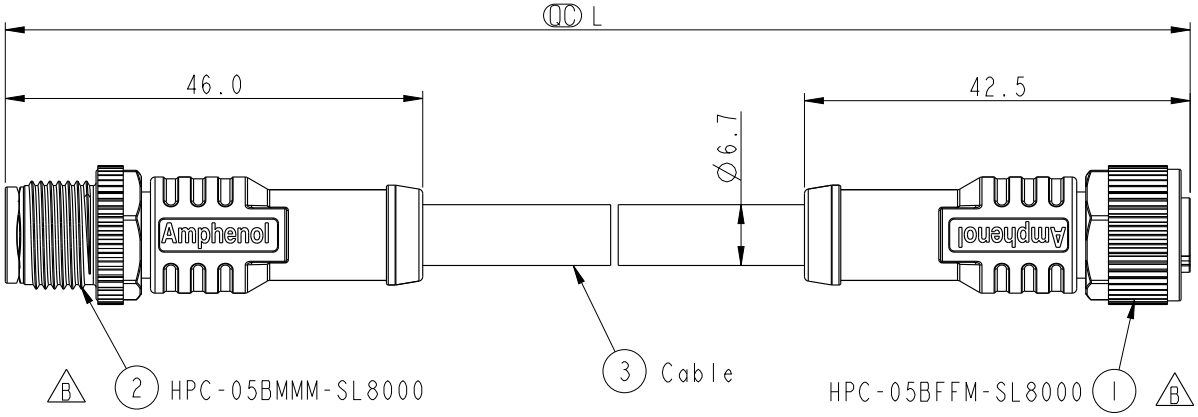

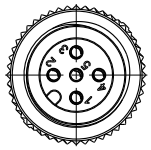

Conn.2

HPC-000505-0MF-CSAXX

XX: 01~99Meters
01: 01Meter
02: 02Meters
:
99: 99Meters
Cable Length(L): 01~99Meters

Note:
* QC Important Dimension To Check.
* Waterproof Rate:IP68
  In 1 meter water within 24 hours
* Connector:Pu, Black
* Nut: Nylon, Black
* Pin: Copper Alloy, Gold Plated 30u"
* Outer Mold: PU, Blue
* Cable: CL2,(24#*1P+A/M)+(22#*1P+A/M)+D+B,PVC UV Cable, OD=6.7mm, Black
* Cable Length Tolerance: 01M:±40mm
  02M~05M:±60mm
  06M~10M:±100mm
  11M~30M:±200mm
  31M~99M:±500mm

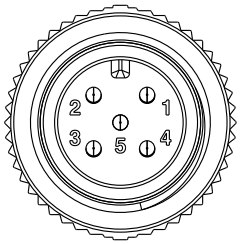

Conn.1
Pin Assignments
Front View

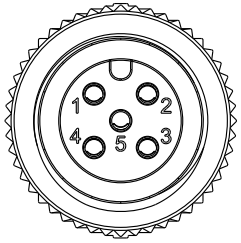

Conn.2
Pin Assignments
Front View

Conn.1	Cable		Conn.2
5	Blue 藍	24#	5
4	White 白	24#	4
3	Black 黑	22#	3
2	Red 紅	22#	2
1	Drain 地線	22#	1

Twist (5, 4)
Twist (3, 2)

Pin Out

UNIT:mm
TOLERANCE ±0.50mm

TITLE: NMEA2000 Micro-C 1 Adaptor Double-ended Cordset

SCALE	SIZE	SHEET	OF
1:2	A4	1	2

REV. C
WC-REV. A.1
QC: Inspection item

Amphenol LTW
安費諾亮泰企業股份有限公司

ITEM NO	DRAWN BY	DATE
	Frank Deng	2018-12-12
DWG NO: HPC-000505-0MF-CSAXX	CHECKED BY: Fisher Wang	DATE: 2018-12-12
CUSTOMER: ALTW	APPROVED BY: Kevin Hu	DATE: 2018-12-12

FMW10702-01-02A1

THIS DOCUMENT IS SUBJECT TO CHANGE WITHOUT NOTICE. IT IS CONFIDENTIAL AND A PROPERTY OF Amphenol LTW. DISCLOSURE TO THIRD PARTY HAS TO BE AUTHORIZED BY Amphenol LTW.

B

PN	Dimension Of Roll
HPC-000505-0MF-CSA02	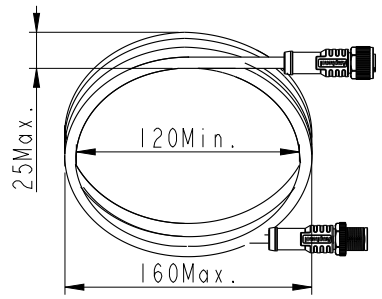
HPC-000505-0MF-CSA05	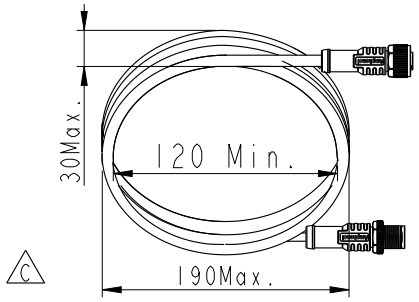 C
HPC-000505-0MF-CSA10	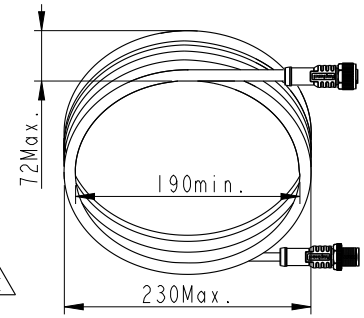 C

ALTW
CONFIDENTIAL
2018-12-12
R&D DEPT.

THIS DOCUMENT IS SUBJECT TO CHANGE WITHOUT NOTICE. IT IS CONFIDENTIAL AND A PROPERTY OF Amphenol LTW. DISCLOSURE TO THIRD PARTY HAS TO BE AUTHORIZED BY Amphenol LTW.

UNIT: mm

TITLE	NMEA2000 Micro-C 1 Adaptor Double-ended Cordset		
SCALE 1:2	SIZE A4	SHEET 2 OF 2	
REV. C	WC-REV. A.1	QC: Inspection item	

Amphenol LTW
安費諾亮泰企業股份有限公司

ITEM NO	DRAWN BY Frank Deng	DATE 2018-12-12
DWG NO HPC-000505-0MF-CSAXX	CHECKED BY Fisher Wang	DATE 2018-12-12
CUSTOMER TBD	APPROVED BY Kevin Hu	DATE 2018-12-12

FMW10702-01-02A1

Mouser Electronics

Authorized Distributor

Click to View Pricing, Inventory, Delivery & Lifecycle Information:

Amphenol:

HPC-000505-0MF-CSA05 HPC-000505-0MF-CSA02 HPC-000505-0MF-CSA10