TPRT9080 Series

600mA,2uA, Higt PSRR Voltage Reaulators

www.sot23.com.tw

Features

- 2μA Ground Current at no Load
- ±2% Output Accuracy
- 600mA Output Current
- 10nA Disable Current (by option)
- Wide Operating Input Voltage Range: 1.2V to 5.5V
- Dropout Voltage: 0.32V at 600mA/ V_{OUT} 3.3V
- Support Fixed Output Voltage 1.2V, 1.5V, 1.6V, 1.8V, 2.5V, 2.8V, 3.0V, 3.3V
- Stable with Ceramic or Tantalum Capacitor
- Current Limit Protection
  Over Temperature Protection
- SOT23-5 Packages

Applications

- Portable, Battery Powered Equipment
- Low Power Microcontrollers
- Laptop, Palmtops and PDAs
- Wireless Communication Equipment
- Audio/Video Equipment
- Car Navigation Systems

General Descri tion

The TPRT9080 series are a group of low-dropout (LDO) voltage regulators offering the benefits of wide input voltage range from 1.2V to 5.5V, low dropout voltage, low power consumption, and miniaturized packaging. Quiescent current of only 2μA makes these devices ideal for powering the battery-powered, always-on systems that require very little idle-state power dissipation to a longer service life. There is an option of shutdown mode by selecting the parts with the EN pin and pulling it low. The shutdown current in this mode goes down to only 10nA (typical).

The TPRT9080 series of linear regulators are stable with the ceramic output capacitor over its wide input range from 1.2V to 5.5V and the entire range of output load current (0mA to 600mA).

Ordering Information

TPRT9080-33GJ5

GJ5:SOT23-5 Package

Output voltage: 12=1.2V
15=1.5V
18=1.8V
30=3.0V
33=3.3V
XX=X.XV

PIN CONFIGURATION

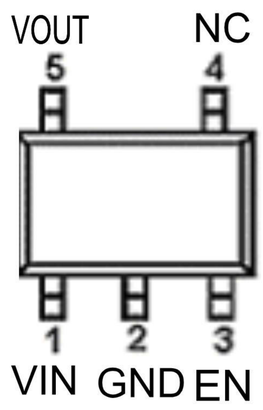

SOT23-5

Typical Application Circuit

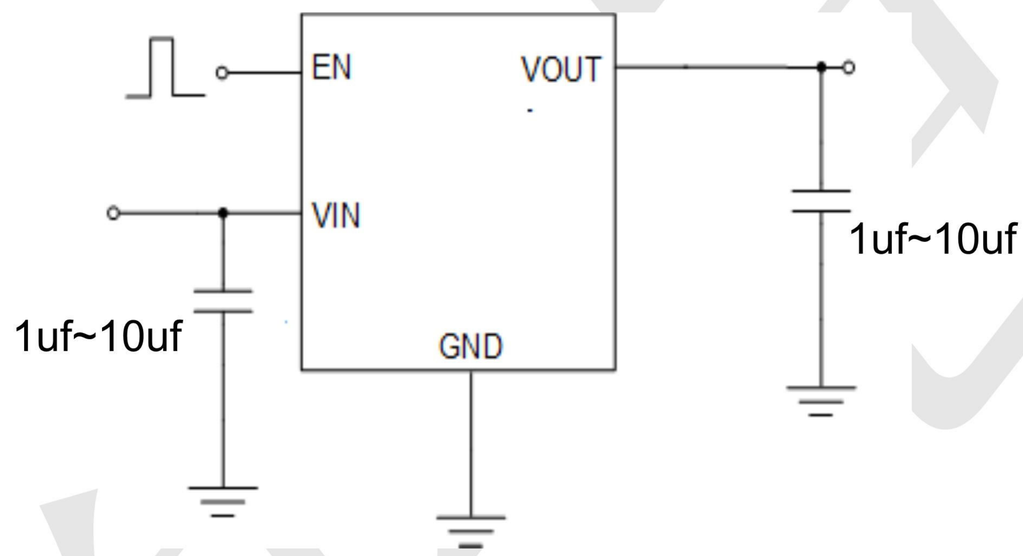

Figure 2: Application circuit of Fixed V_{OUT} LDO with enable function

ABSOLUTE MAXIMUM RATINGS

VIN Pin to GND Pin Voltage ..... -0.3V to 6.5V

VOUT Pin and EN Voltage ..... -0.3V to 6V

VOUT Pin to VIN Pin Voltage ..... -6V to 0.3V

Storage Temperature Range ..... -60ºC~150ºC

Lead Temperature (Soldering, 10 sec) 260ºC

Junction Temperature 150ºC

Operating Ambient Temperature Range T_A ..... -40ºC~85ºC

Thermal Resistance Junction to Case, $R_{\theta JC}$

- SOT23-3 ..... 115°C/W
- SOT23-5 ..... 115°C/W
- DFN-4(1x1) ..... 65°C/W
- DFN-6(2x2) ..... 30°C/W

Thermal Resistance Junction to Ambient, $R_{\theta JA}$

- SOT23-3 ..... 250°C/W
- SOT23-5 ..... 250°C/W
- DFN-4(1x1) ..... 195°C/W
- DFN-6(2x2) ..... 165°C/W

Electrical Characteristics (T$_A$=25 C unless otherwise noted)

(V_{IN} =5V, V_{EN} = 5V T_A=25°C unless otherwise specified)

Parameter	Symbol	Test Conditions	Min	Typ	Max	Unit
Supply Voltage	V_{IN}		1.2	--	5.5	V
DC Output Voltage Accuracy		I_{LOAD} =0.1mA	-2		2	%
Dropout Voltage (I_{LOAD} =600mA) (Note 3)	V_{DROP_3V}	V_{OUT} ≥ 3V		0.32		V
	$V_{DROP_2.8V}$	V_{OUT} = 2.8V		0.36		
	$V_{DROP_2.5V}$	V_{OUT} = 2.5V		0.36		
	$V_{DROP_1.8V}$	V_{OUT} = 1.8V		0.57		
	$V_{DROP_1.5V}$	V_{OUT} = 1.5V		0.71		
	V	V = 1.2V		0.8		
Ground Current	I_Q	I_{LOAD} = 0mA		2		μA
Shutdown Ground Current	I_{SD}	V_{EN} = 0V, V_{OUT} = 0V		0.01	0.5	μA
V_{OUT} Shutdown Leakage Current	I_{LEAK}			0.01	0.5	
Enable Threshold Voltage	V_{IH}	EN Rising			2	V
	V_{IL}	EN Falling	0.6			
EN Input Current	I_{EN}	V_{EN} = 5V		10	100	nA
Line Regulation	ΔLINE	I_{LOAD} =30mA, 1.5V ≤ V_{IN} ≤ 5.5V or (V_{OUT} + 0.2V) ≤ V_{IN} ≤ 5.5V		0.2		%
Load Regulation	ΔLOAD	10mA ≤ I_{LOAD} ≤ 0.3A		0.2		%
Output Current Limit	I_{LIM}	V_{OUT} =0	601	1100		mA
Power Supply Rejection Ratio (I_{LOAD} =5mA)	PSRR	V_{OUT} =1.2V, V_{IN} = 2V; f = 100Hz	--	80	--	dB
		f = 1kHz	--	75	--	
Output Voltage Noise (BW = 10Hz to 100kHz, C_{OUT} =1μF,)		V_{IN} = 3.5V I_{LOAD} =0.1A; V_{OUT} =0.9V	--	40	--	μV_{RMS}
		V_{OUT} =2.8V	--	50	--	
Thermal Shutdown Temperature	T_{SD}	I_{LOAD} =10mA	--	155	--	°C
Thermal Shutdown Hysteresis	ΔT_{SD}		--	15	--	°C
Discharge Resistance		EN = 0V , V_{OUT} = 0.1V	--	100	--	Ω

Note 1. Stresses beyond those listed "Absolute Maximum Ratings" may cause permanent damage to the device. These are stress ratings only, and functional operation of the device at these or any other conditions beyond those indicated in the operational sections of the specifications is not implied. Exposure to absolute maximum rating conditions may affect device reliability.

Note 2. θ_{JA} is measured at T_A = 25°C on a TECH PUBLICboard.

Note 3. $V_{DROP} = V_{IN} - V_{OUT}$ when the V_{OUT} is 98% of its target value.

Typical Characteristics

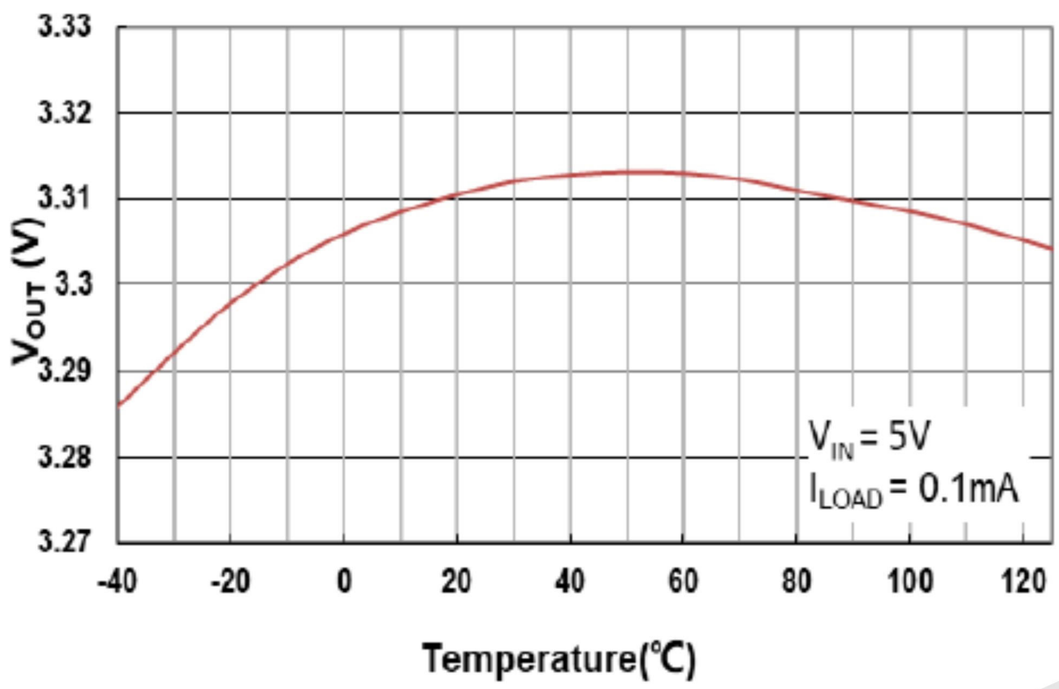

Fig. 5 Output Voltage vs. Temperature

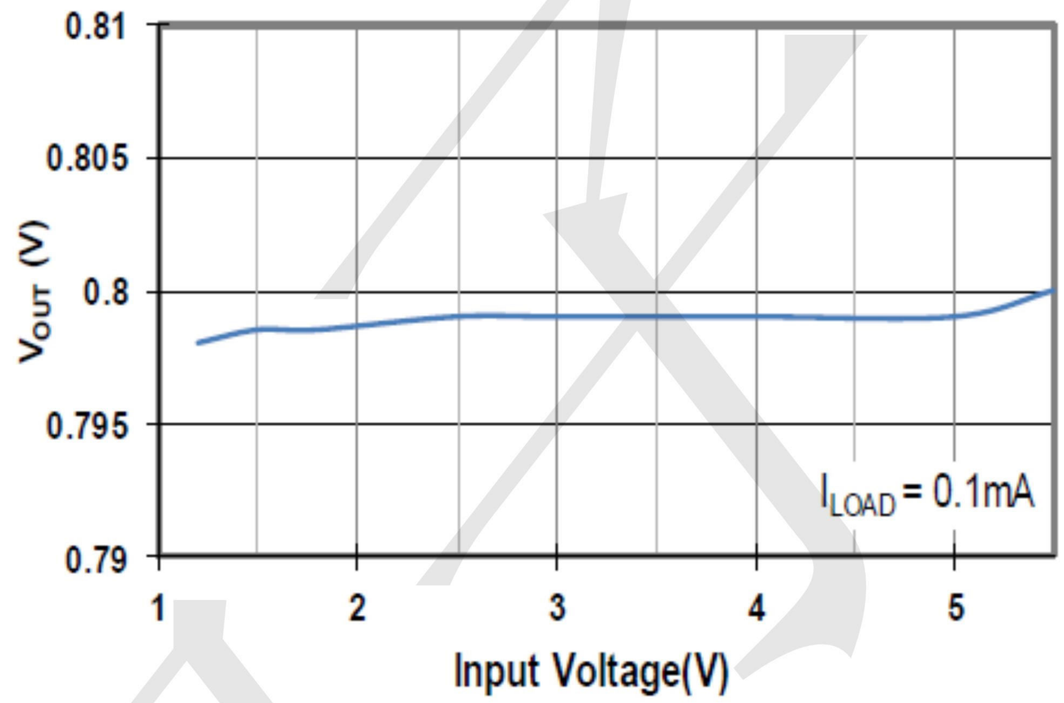

Fig. 6 Output Voltage vs. Input Voltage

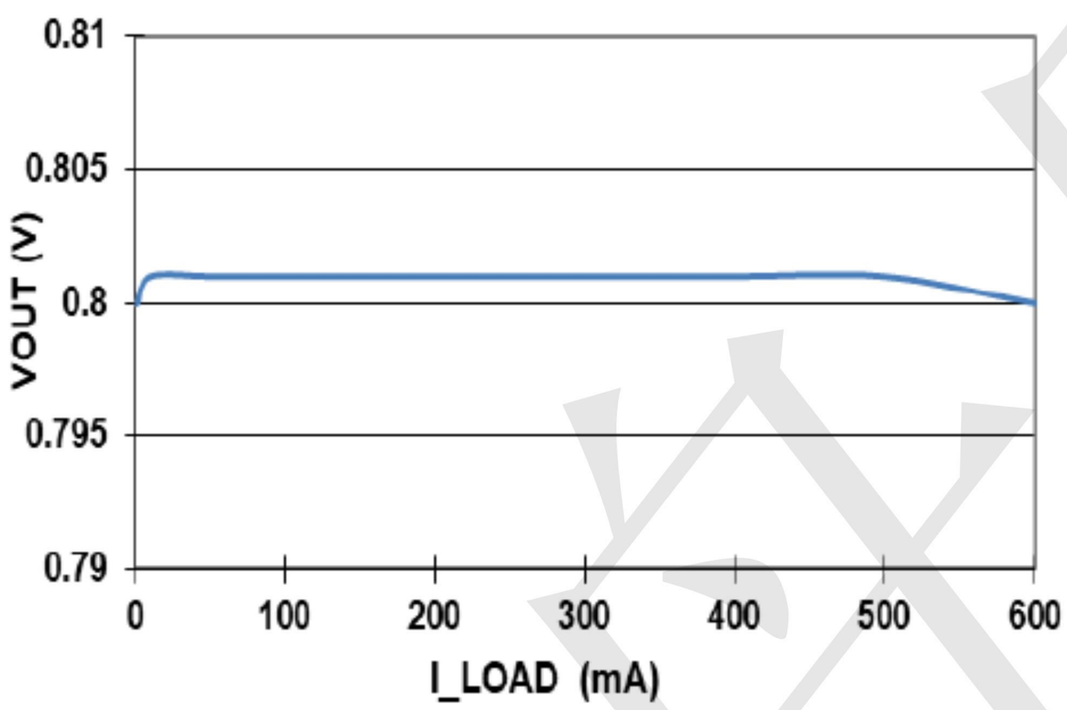

Fig. 7 Output Voltage vs. Load Current

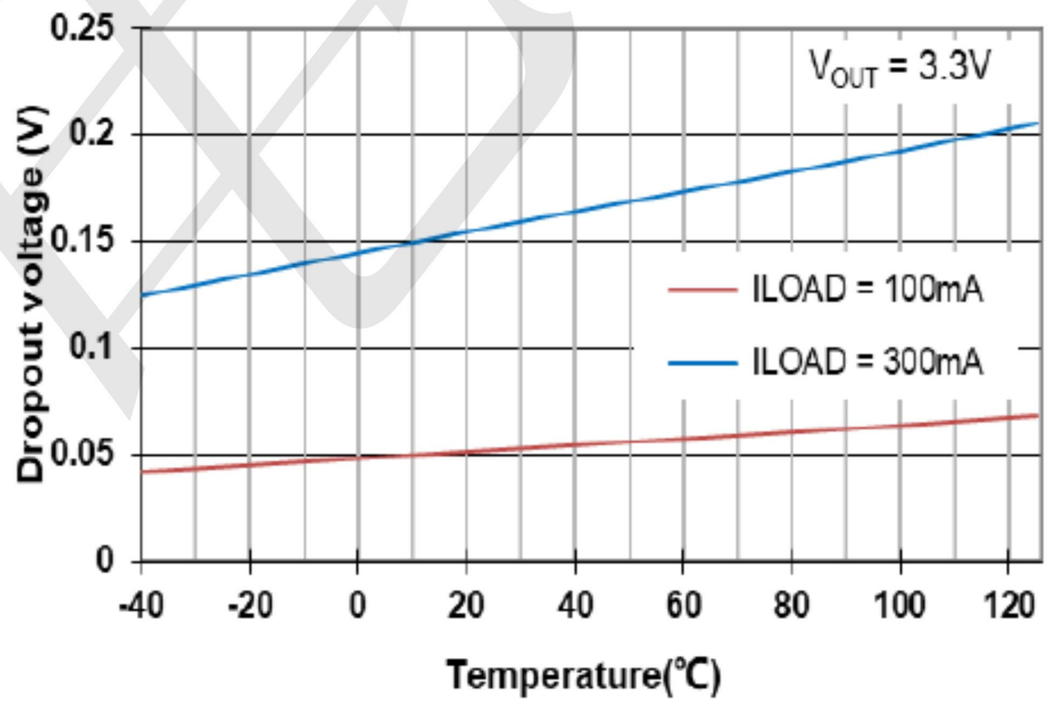

Fig. 8 Dropout Voltage vs. Temperature

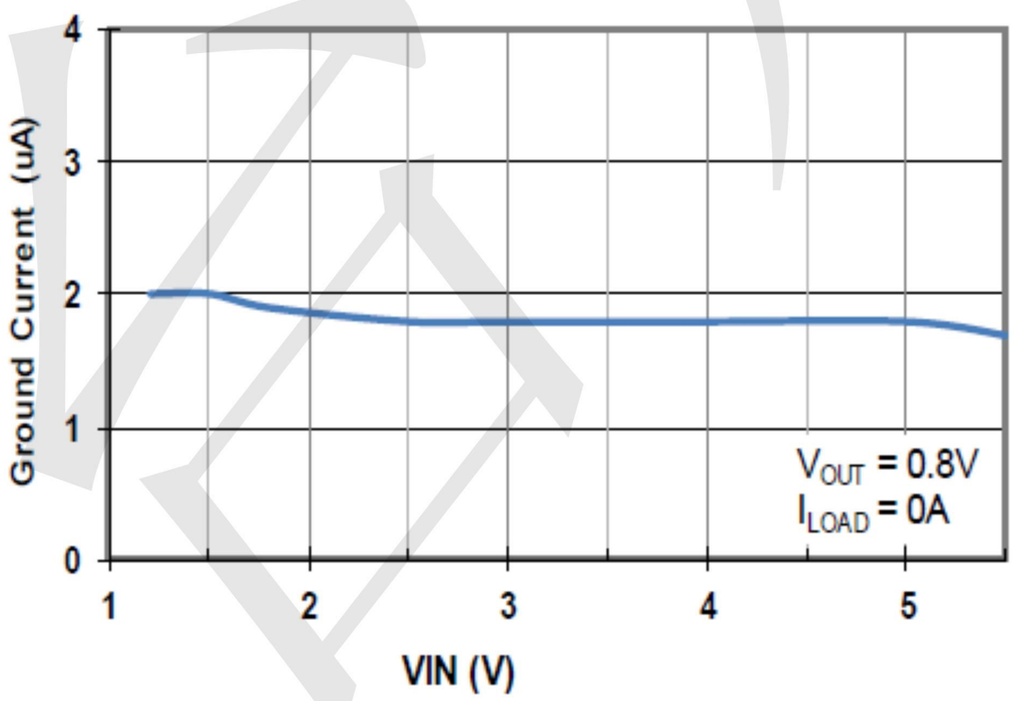

Fig. 9 Ground Current vs. Input Voltage

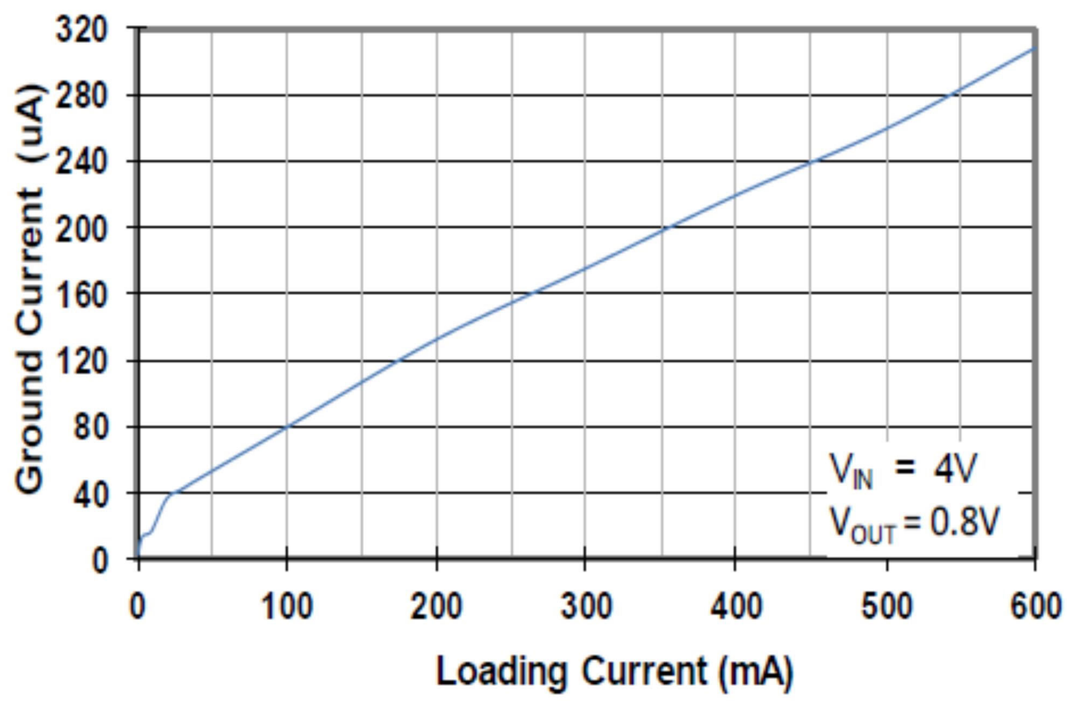

Fig. 10 Ground Current vs. Loading Current

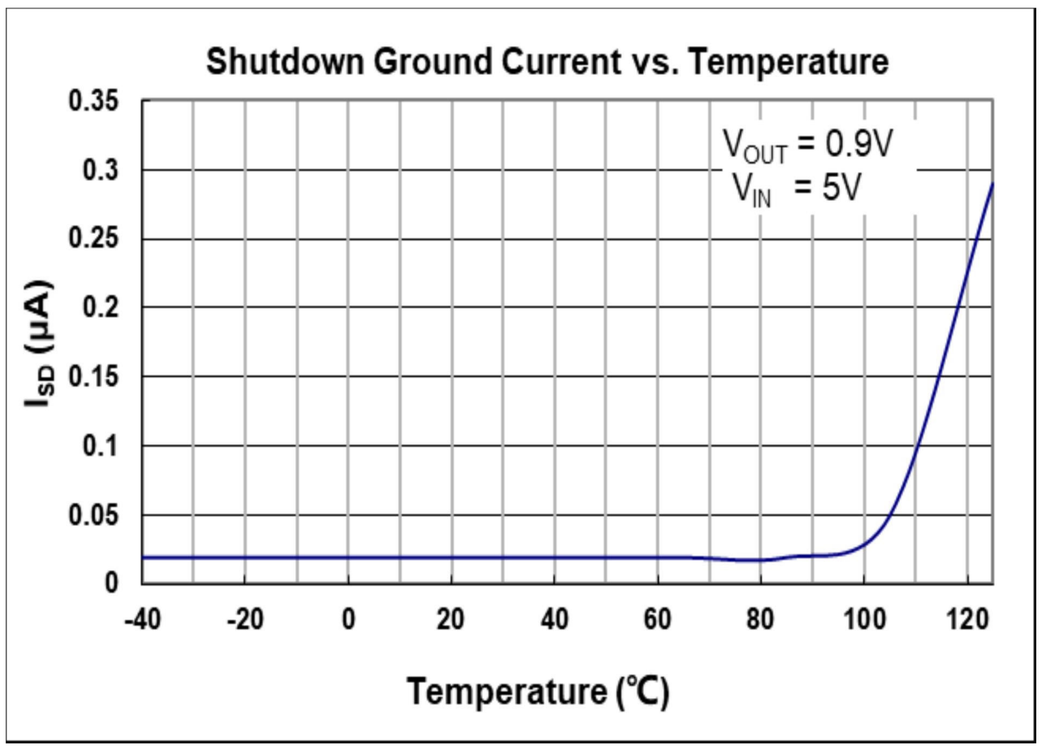

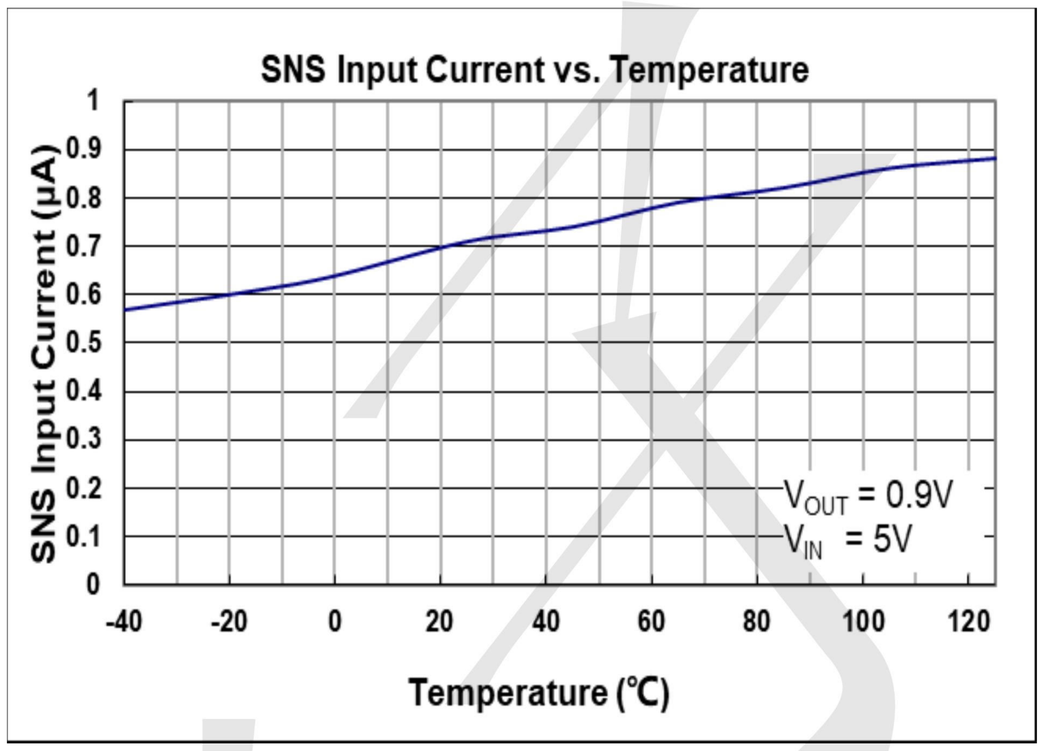

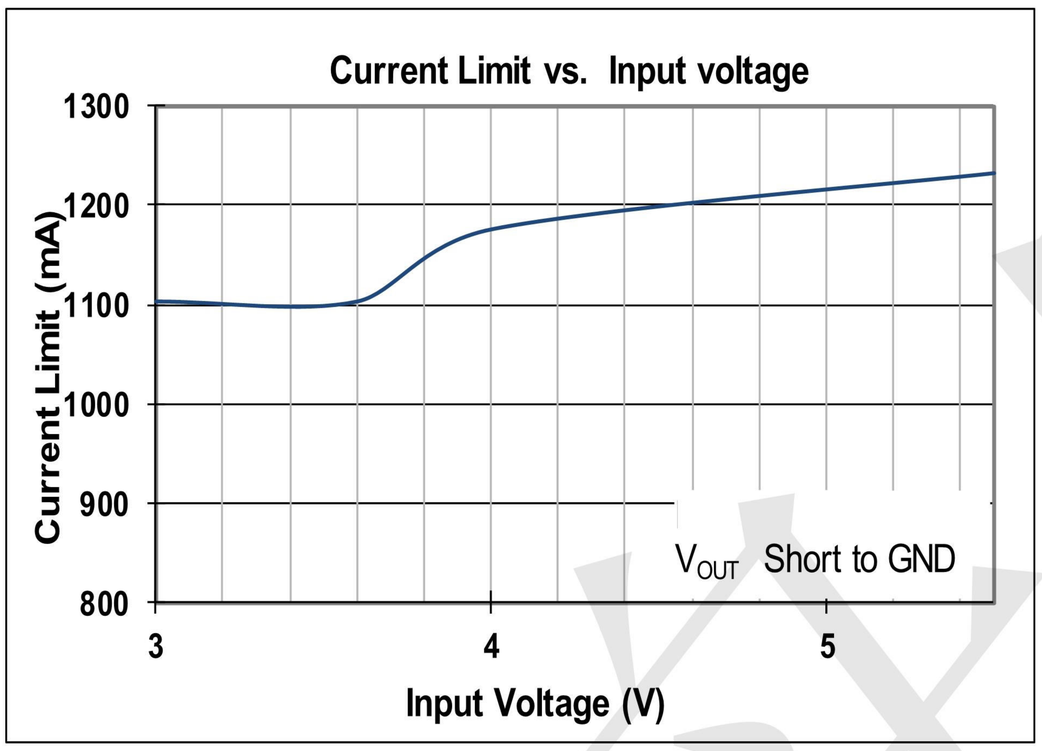

Current Limit Response

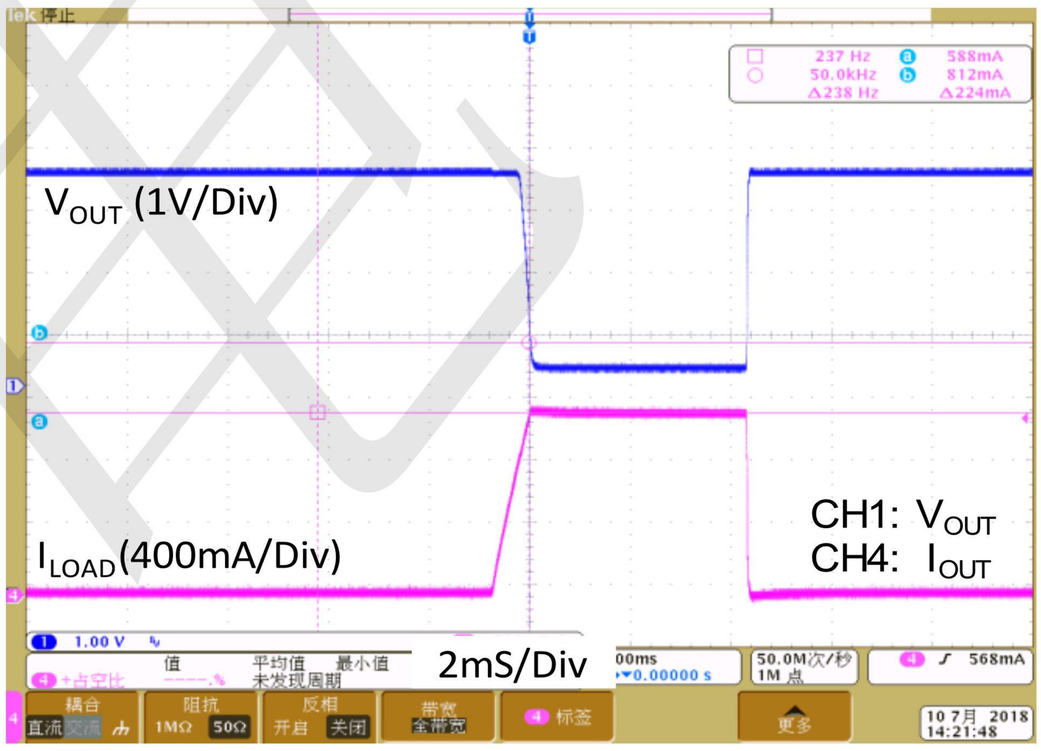

Load Transient Response I

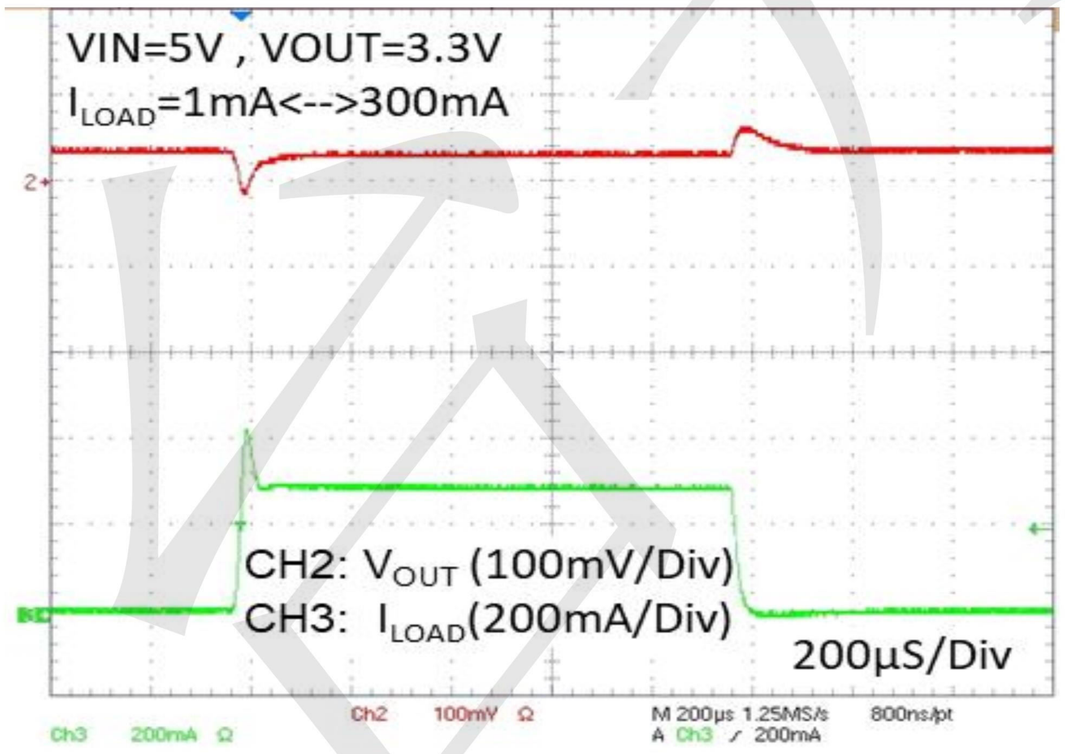

Load Transient Response II

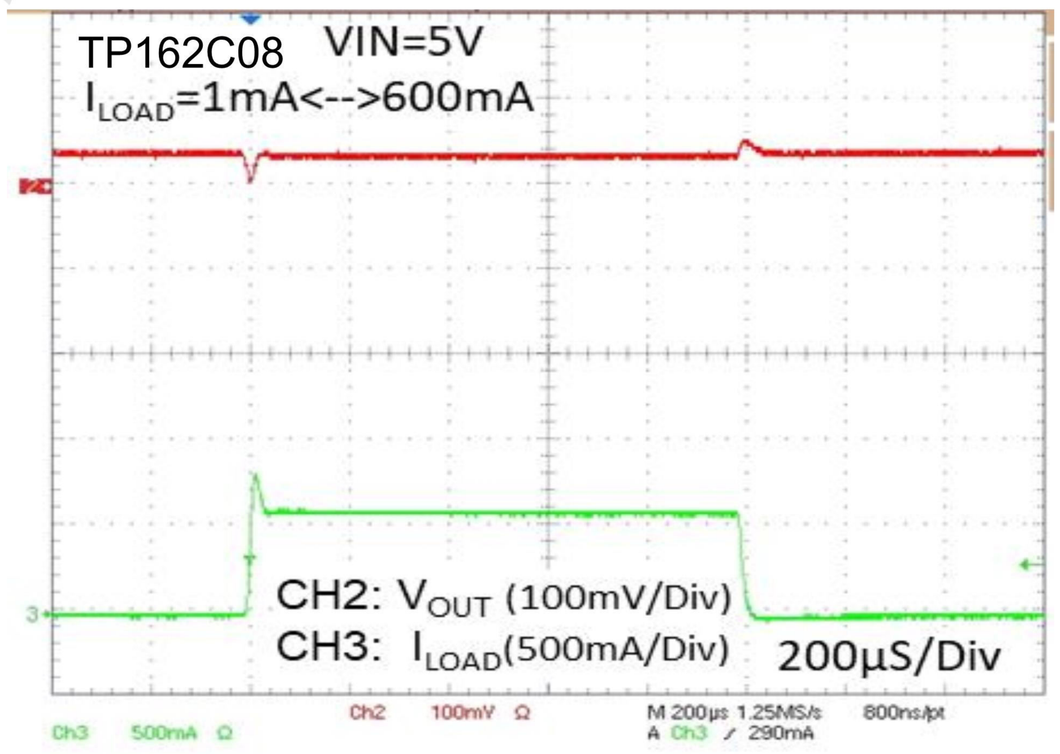

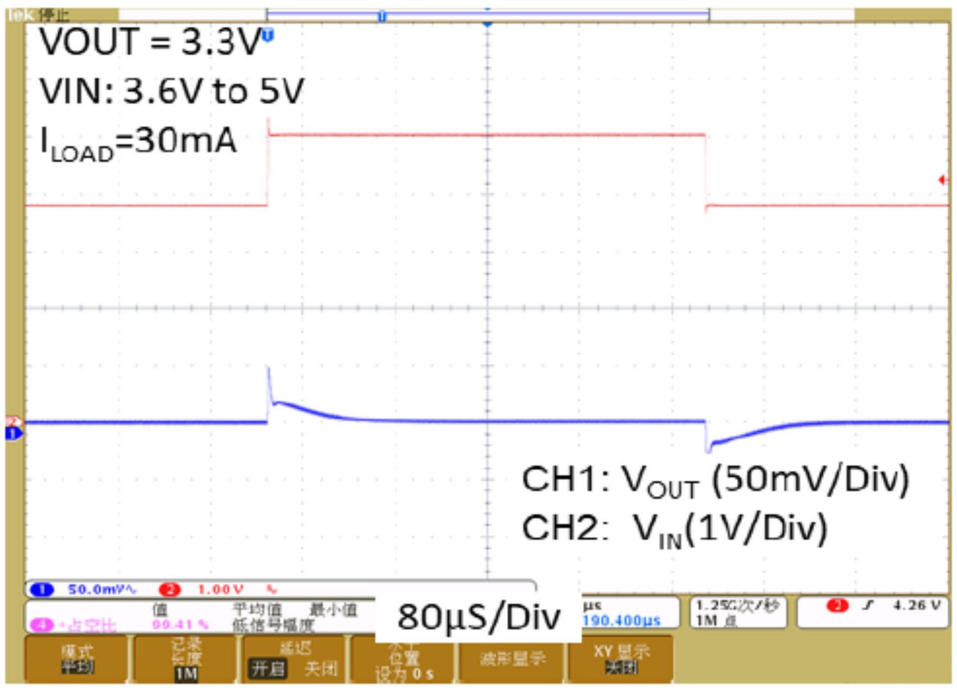

Fig. 17 Line Transient Response

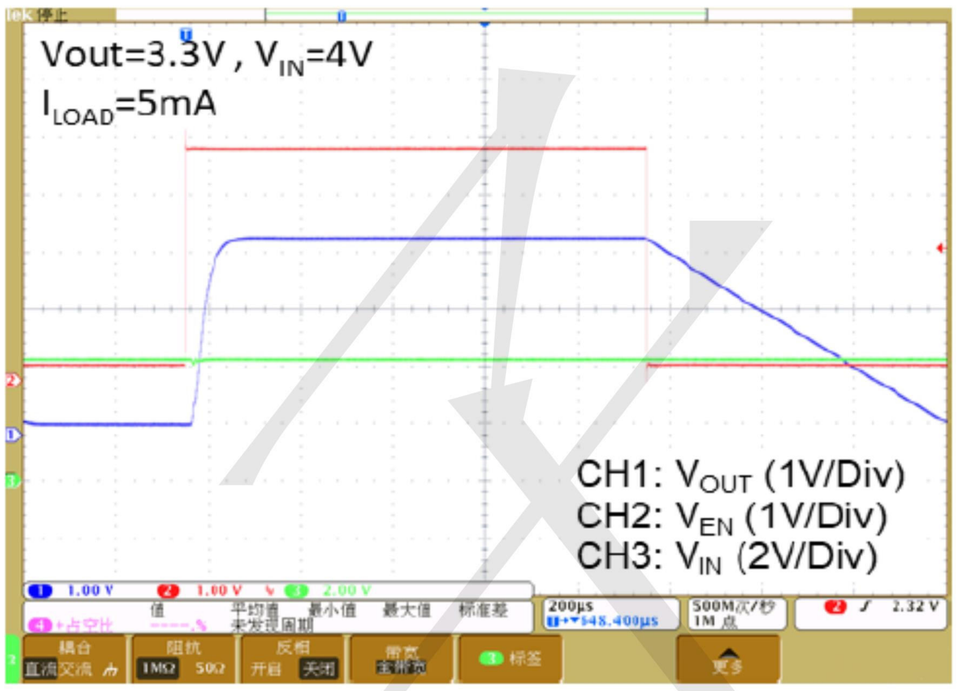

Fig. 18 V_{OUT} Turn On/Off by EN

BLOCK DIAGRAM

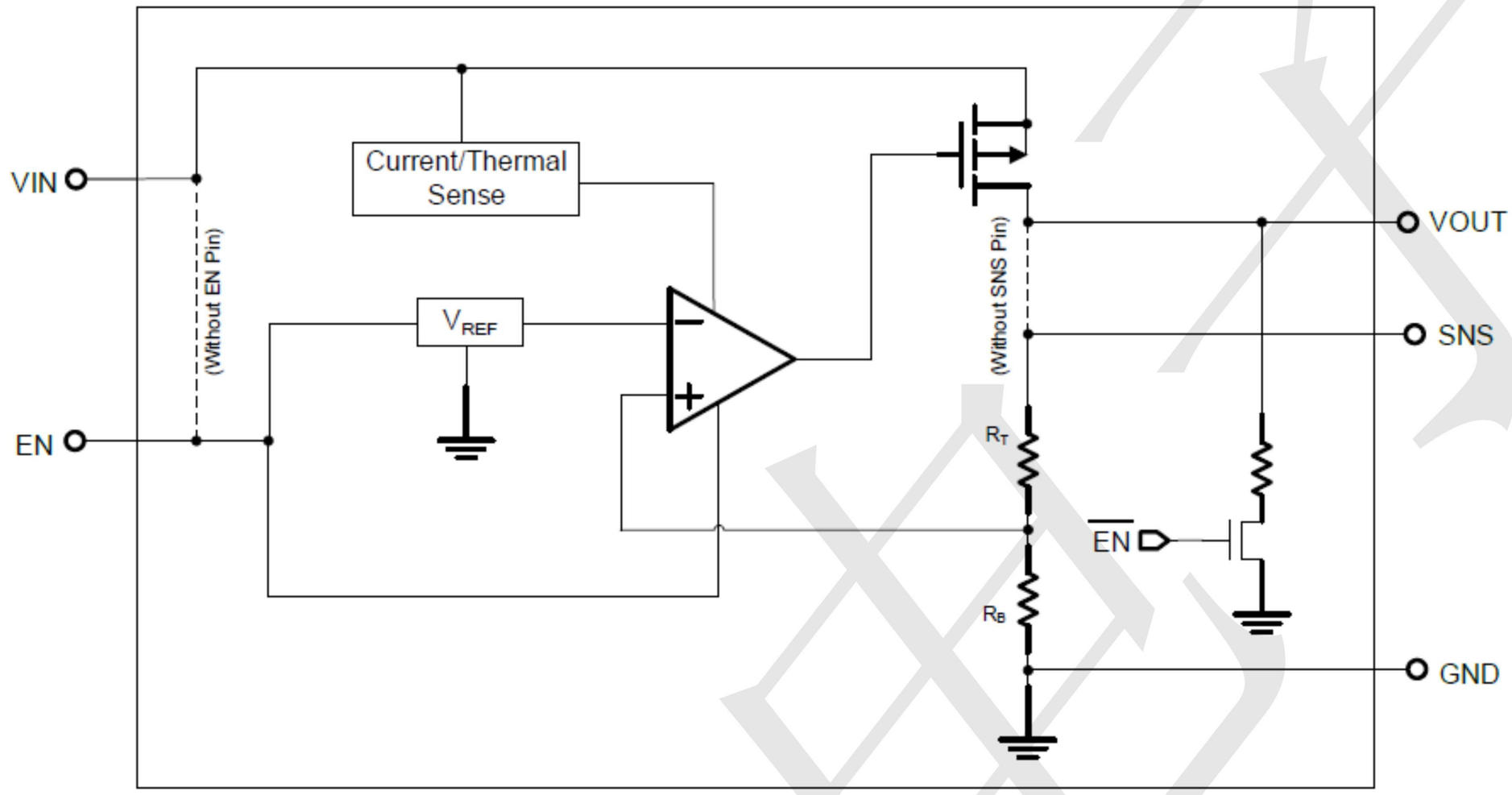

Package informantion

SOT23-5

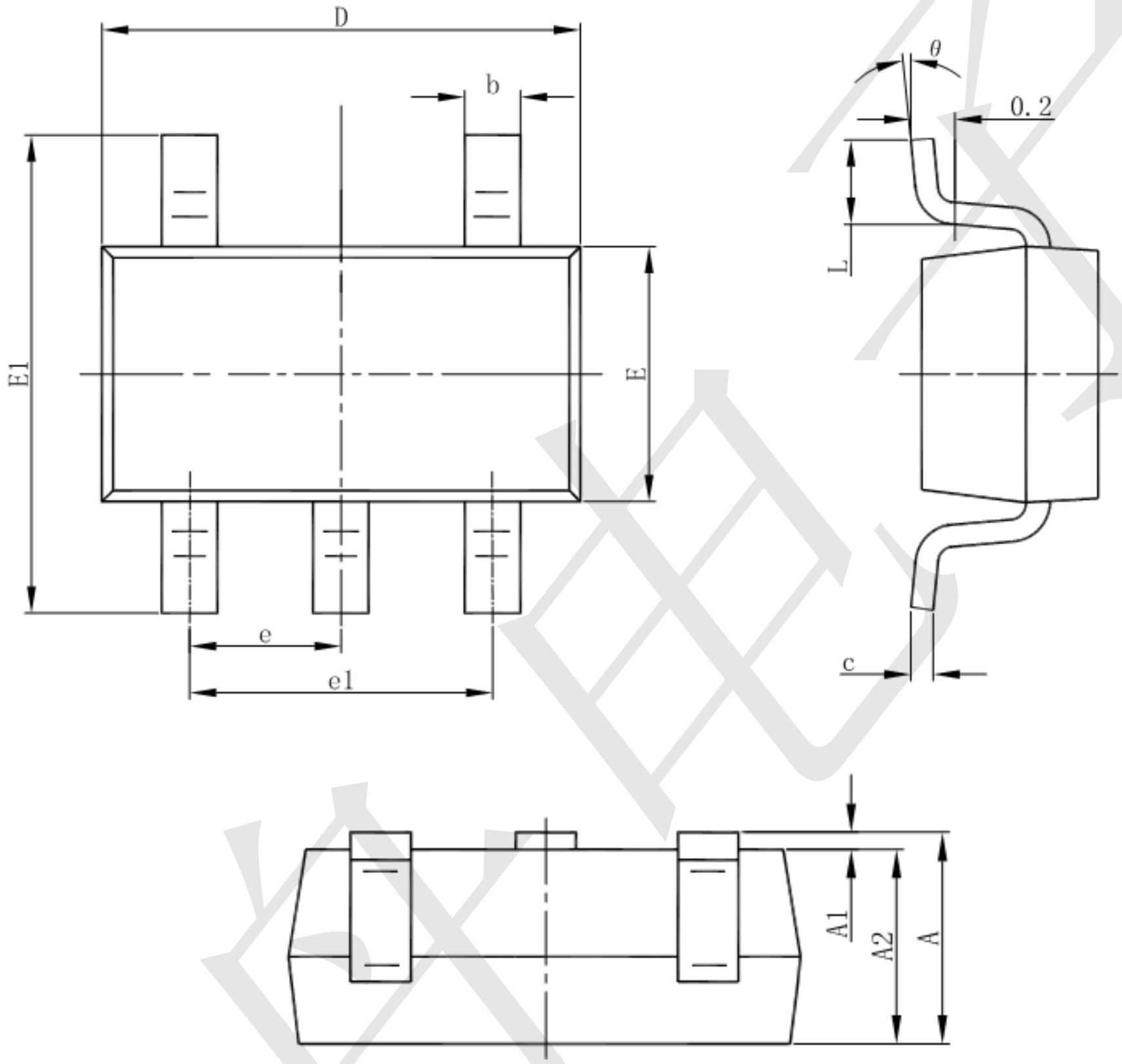

Symbol	Dimensions In Millimeters		Dimensions In Inches	
	Min	Max	Min	Max
A	1.050	1.250	0.041	0.049
A1	0.000	0.100	0.000	0.004
A2	1.050	1.150	0.041	0.045
b	0.300	0.500	0.012	0.020
c	0.100	0.200	0.004	0.008
D	2.820	3.020	0.111	0.119
E	1.500	1.700	0.059	0.067
E1	2.650	2.950	0.104	0.116
e	0.950(BSC)		0.037(BSC)	
e1	1.800	2.000	0.071	0.079
L	0.300	0.600	0.012	0.024
θ	0°	8°	0°	8°