CKT. SIZE	DIM. A (MM)	DIM. A INCH	DIM. B REF. (MM)	DIM. B REF. INCH
4	(5.08)	0.200	(2.54)	0.100
6	(7.62)	0.300	(5.08)	0.200
8	(10.16)	0.400	(7.62)	0.300
10	(12.70)	0.500	(10.16)	0.400
12	(15.24)	0.600	(12.70)	0.500
14	(17.78)	0.700	(15.24)	0.600
16	(20.32)	0.800	(17.78)	0.700
18	(22.86)	0.900	(20.32)	0.800
20	(25.40)	1.000	(22.86)	0.900
22	(27.94)	1.100	(25.40)	1.000
24	(30.48)	1.200	(27.94)	1.100
26	(33.02)	1.300	(30.48)	1.200
28	(35.56)	1.400	(33.02)	1.300
30	(38.10)	1.500	(35.56)	1.400
32	(40.64)	1.600	(38.10)	1.500
34	(43.18)	1.700	(40.64)	1.600
36	(45.72)	1.800	(43.18)	1.700
38	(48.26)	1.900	(45.72)	1.800
40	(50.80)	2.000	(48.26)	1.900
42	(53.34)	2.100	(50.80)	2.000
44	(55.88)	2.200	(53.34)	2.100
46	(58.42)	2.300	(55.88)	2.200
48	(60.96)	2.400	(58.42)	2.300
50	(63.50)	2.500	(60.96)	2.400
52	(66.04)	2.600	(63.50)	2.500
54	(68.58)	2.700	(66.04)	2.600
56	(71.12)	2.800	(68.58)	2.700
58	(73.66)	2.900	(71.12)	2.800
60	(76.20)	3.000	(73.66)	2.900
62	(78.74)	3.100	(76.20)	3.000
64	(81.28)	3.200	(78.74)	3.100
66	(83.82)	3.300	(81.28)	3.200
68	(86.36)	3.400	(83.82)	3.300
70	(88.90)	3.500	(86.36)	3.400
72	(91.44)	3.600	(88.90)	3.500
74	(93.98)	3.700	(91.44)	3.600
76	(96.52)	3.800	(93.98)	3.700
78	(99.06)	3.900	(96.52)	3.800
80	(101.60)	4.000	(99.06)	3.900
82	(104.14)	4.100	(101.60)	4.000
84	(106.68)	4.200	(104.14)	4.100
86	(109.22)	4.300	(106.68)	4.200
88	(111.76)	4.400	(109.22)	4.300
90	(114.30)	4.500	(111.76)	4.400
92	(116.84)	4.600	(114.30)	4.500
94	(119.38)	4.700	(116.84)	4.600
96	(121.92)	4.800	(119.38)	4.700
98	(124.46)	4.900	(121.92)	4.800
100	(127.00)	5.000	(124.46)	4.900

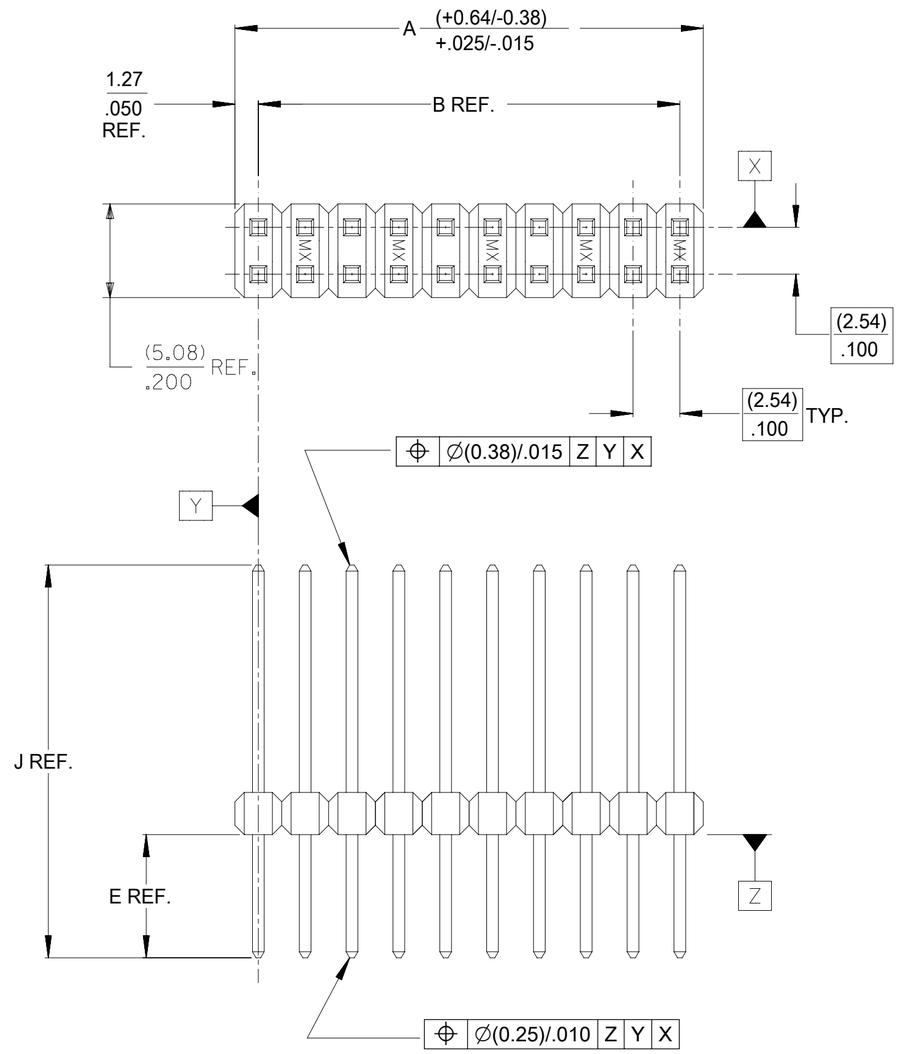

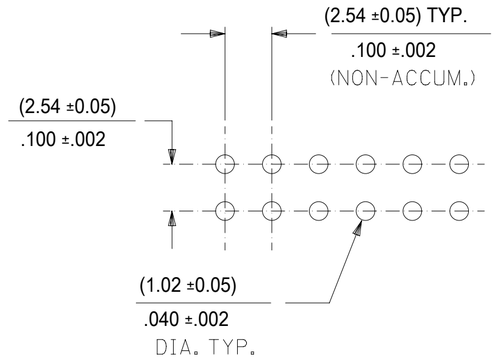

RECOMMENDED P.C. BOARD HOLE LAYOUT

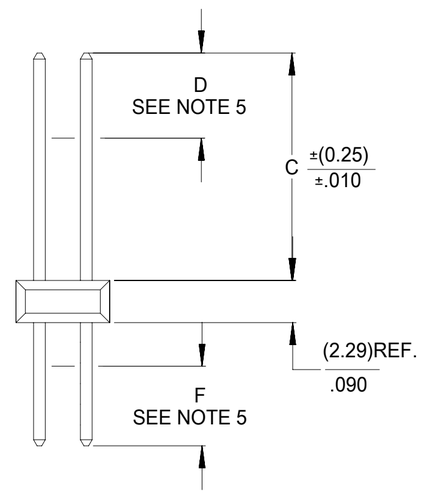

NOTES:

1. MATERIAL:
   PIN: COPPER ALLOY
   WAFER: GLASS FILLED LCP (LIQUID CRYSTAL POLYMER, UL 94V-0, COLOR: BLACK.
2. FINISH:

   TIN = (0.00380)/.000150 MINIMUM TIN PLATE OVER (0.00127)/.000050 MINIMUM NICKEL PLATE.
   15 GOLD = (0.00038)/.000015 MINIMUM GOLD PLATE IN SELECT AREA, (0.00190)/.000075 MINIMUM TIN PLATE IN SELECT AREA, OVER (0.00127)/.000050 MINIMUM NICKEL PLATE OVERALL.
   30 GOLD = (0.00076)/.000030 MINIMUM GOLD PLATE IN SELECT AREA, (0.00190)/.000075 MINIMUM TIN PLATE IN SELECT AREA, OVER (0.00127)/.000050 MINIMUM NICKEL PLATE OVERALL.
   GT15 = (0.00038)/.000015 MINIMUM GOLD PLATE IN SELECT AREA, (0.00254)/.000100 MINIMUM TIN PLATE IN SELECT AREA, OVER (0.00127)/.000050 MINIMUM NICKEL PLATE OVERALL.

* THE PRIMARY SHIPPING CARTON WILL BE LABELED "COMPLIANT TO RoHS DIRECTIVE 2002/95/EC AND ELV ANNEX II OF DIRECTIVE 2000/53/EC". CARTONS WITHOUT THIS LABEL MAY CONTAIN PRODUCT WITH LEAD PLATING.

3. PRODUCT SPECIFICATION: NONE
4. PACKAGING INFORMATION: (UNLESS OTHERWISE NOTED IN TABLES) BULK PACK PER PK-70873-0353.
5. MEASURE POINT FOR PLATING THICKNESS.
6. FOR ASSEMBLIES WITH VOIDED PINS, REFER TO DRAWING NO. SDA-70280-5001-9999.
7. PIN PUSHOUT FORCE: 3 POUNDS MINIMUM IN EITHER DIRECTION.
8. FOR ILLUSTRATION PURPOSES, 20 (DUAL 10) CIRCUIT SIZE IS SHOWN.
9. PINS MEET SOLDERABILITY SPEC SMES-152. ABSENCE OF PLATING PERMISSIBLE AT BANDOLIER PIN FAYING SURFACE. (APPROXIMATELY (0.64)/.025 INCH LONG BY (0.15)/.006 INCH WIDE AT 2 LOCATIONS)
10. PARTS CONFORM TO CLASS B OF COSMETIC SPECIFICATION PS-45499-002

THIS DRAWING CONTAINS INFORMATION THAT IS PROPRIETARY TO MOLEX ELECTRONIC TECHNOLOGIES, LLC AND SHOULD NOT BE USED WITHOUT WRITTEN PERMISSION

DIMENSION UNITS	SCALE
MM/IN	4:1

GENERAL TOLERANCES (UNLESS SPECIFIED)

	MM	INCH
4 PLACES	±	±
3 PLACES	±	± 0.005
2 PLACES	± 0.13	± 0.01
1 PLACE	± 0.25	±
0 PLACES	±	±
ANGULAR TOL	± 0.5 °	

DRAFT WHERE APPLICABLE MUST REMAIN WITHIN DIMENSIONS

CURRENT REV DESC:

EC NO: 742602
DRWN: SUAIFR 2023/02/28
CHK'D: SUAIFR 2023/03/16
APPR: MRAMAKRISHNA 2023/03/20

INITIAL REVISION:
DRWN: SMR 04/19/1993
APPR: SMR 04/19/1993

molex

SALES ASSY-HIGH TEMP.
DUAL ROW WAFER W/BREAK- OFF OPT. .025 SQ PINS

PRODUCT CUSTOMER DRAWING

DOCUMENT NUMBER	DOC TYPE	DOC PART	REVISION
SDA-70280-0001-4000	PSD	001	H1

THIRD ANGLE PROJECTION	DRAWING	SERIES	MATERIAL NUMBER	CUSTOMER	SHEET NUMBER
	C-SIZE	70280	SEE TABLE	GENERAL MARKET	1 OF 9

DOCUMENT STATUS	P1	RELEASE DATE	2023/03/20 10:44:28

FORMAT: Eng-lega-master-tb-prod-C
REVISION: D
DATE: 2018/01/18

ENGINEERING NUMBER A-70280-	RELEASE FOR MANUFACTURE			E REF.		J REF.	C ±(0.25) .010			MATING END PLATING			P.C BOARD END PLATING			FOR PACKAGING INFORMATION, SEE NOTE 4, SHEET 1 (UNLESS OTHERWISE SPECIFIED BELOW)
										TYPE	D MEAS.		TYPE	F MEAS.		
-0001/-0040	R.F.M.			(2.72) .107		(11.10) .437	(6.10) .240			TIN	(2.54) .100		TIN	(1.27) .050		
-0001/-0080	R.F.M.			(2.72) .107		(11.10) .437	(6.10) .240			15 GOLD	(2.54) .100		TIN	(1.27) .050		
-0081/-0120	R.F.M.			(2.72) .107		(11.10) .437	(6.10) .240			30 GOLD	(2.54) .100		TIN	(1.27) .050		
-0121/-0160	R.F.M.			(2.79) .110		(13.21) .520	(8.13) .320			TIN	(4.57) .180		TIN	(1.27) .050		
-0161/-0200	R.F.M.			(2.79) .110		(13.21) .520	(8.13) .320			15 GOLD	(4.57) .180		TIN	(1.27) .050		
-0201/-0240	R.F.M.			(2.79) .110		(13.21) .520	(8.13) .320			30 GOLD	(4.57) .180		TIN	(1.27) .050		
-0241/-0280	R.F.M.			(3.94) .155		(12.32) .485	(6.10) .240			30 GOLD	(2.54) .100		TIN	(1.27) .050		

CKTS	EDP NUMBER	ENG NUMBER	EDP NUMBER	ENG NUMBER	EDP NUMBER	ENG NUMBER	EDP NUMBER	ENG NUMBER	EDP NUMBER	ENG NUMBER	EDP NUMBER	ENG NUMBER	EDP NUMBER	ENG NUMBER	CKTS
	N.A.	AX-70280-0001	N.A.	AX-70280-0041	N.A.	AX-70280-0081	N.A.	AX-70280-0121	N.A.	AX-70280-0161	N.A.	AX-70280-0201	N.A.	AX-70280-0241	
4	010-89-7041	A-70280-0002	010-89-7042	A-70280-0042	010-89-7040	A-70280-0082	010-97-7045	A-70280-0122	010-97-7046	A-70280-0162	010-89-7043	A-70280-0202	010-87-9045	A-70280-0242	4
6	010-89-7061	A-70280-0003	010-89-7062	A-70280-0043	010-89-7060	A-70280-0083	010-97-7065	A-70280-0123	010-97-7066	A-70280-0163	010-89-7063	A-70280-0203	010-87-9065	A-70280-0243	6
8	010-89-7081	A-70280-0004	010-89-7082	A-70280-0044	010-89-7080	A-70280-0084	010-97-7085	A-70280-0124	010-97-7086	A-70280-0164	010-89-7083	A-70280-0204	010-87-9085	A-70280-0244	8
10	010-89-7101	A-70280-0005	010-89-7102	A-70280-0045	010-89-7100	A-70280-0085	010-97-7105	A-70280-0125	010-97-7106	A-70280-0165	010-89-7103	A-70280-0205	010-87-9105	A-70280-0245	10
12	010-89-7121	A-70280-0006	010-89-7122	A-70280-0046	010-89-7120	A-70280-0086	010-97-7125	A-70280-0126	010-97-7126	A-70280-0166	010-89-7123	A-70280-0206	010-87-9125	A-70280-0246	12
14	010-89-7141	A-70280-0007	010-89-7142	A-70280-0047	010-89-7140	A-70280-0087	010-97-7145	A-70280-0127	010-97-7146	A-70280-0167	010-89-7143	A-70280-0207	010-87-9145	A-70280-0247	14
16	010-89-7161	A-70280-0008	010-89-7162	A-70280-0048	010-89-7160	A-70280-0088	010-97-7165	A-70280-0128	010-97-7166	A-70280-0168	010-89-7163	A-70280-0208	010-87-9165	A-70280-0248	16
18	010-89-7181	A-70280-0009	010-89-7182	A-70280-0049	010-89-7180	A-70280-0089	010-97-7185	A-70280-0129	010-97-7186	A-70280-0169	010-89-7183	A-70280-0209	010-87-9185	A-70280-0249	18
20	010-89-7201	A-70280-0010	010-89-7202	A-70280-0050	010-89-7200	A-70280-0090	010-97-7205	A-70280-0130	010-97-7206	A-70280-0170	010-89-7203	A-70280-0210	010-87-9205	A-70280-0250	20
22	010-89-7221	A-70280-0011	010-89-7222	A-70280-0051	010-89-7220	A-70280-0091	010-97-7225	A-70280-0131	010-97-7226	A-70280-0171	010-89-7223	A-70280-0211	010-87-9225	A-70280-0251	22
24	010-89-7241	A-70280-0012	010-89-7242	A-70280-0052	010-89-7240	A-70280-0092	010-97-7245	A-70280-0132	010-97-7246	A-70280-0172	010-89-7243	A-70280-0212	010-87-9245	A-70280-0252	24
26	010-89-7261	A-70280-0013	010-89-7262	A-70280-0053	010-89-7260	A-70280-0093	010-97-7265	A-70280-0133	010-97-7266	A-70280-0173	010-89-7263	A-70280-0213	010-87-9265	A-70280-0253	26
28	010-89-7281	A-70280-0014	010-89-7282	A-70280-0054	010-89-7280	A-70280-0094	010-97-7285	A-70280-0134	010-97-7286	A-70280-0174	010-89-7283	A-70280-0214	010-87-9285	A-70280-0254	28
30	010-89-7301	A-70280-0015	010-89-7302	A-70280-0055	010-89-7300	A-70280-0095	010-97-7305	A-70280-0135	010-97-7306	A-70280-0175	010-89-7303	A-70280-0215	010-87-9305	A-70280-0255	30
32	010-89-7321	A-70280-0016	010-89-7322	A-70280-0056	010-89-7320	A-70280-0096	010-97-7325	A-70280-0136	010-97-7326	A-70280-0176	010-89-7323	A-70280-0216	010-87-9325	A-70280-0256	32
34	010-89-7341	A-70280-0017	010-89-7342	A-70280-0057	010-89-7340	A-70280-0097	010-97-7345	A-70280-0137	010-97-7346	A-70280-0177	010-89-7343	A-70280-0217	010-87-9345	A-70280-0257	34
36	010-89-7361	A-70280-0018	010-89-7362	A-70280-0058	010-89-7360	A-70280-0098	010-97-7365	A-70280-0138	010-97-7366	A-70280-0178	010-89-7363	A-70280-0218	010-87-9365	A-70280-0258	36
38	010-89-7381	A-70280-0019	010-89-7382	A-70280-0059	010-89-7380	A-70280-0099	010-97-7385	A-70280-0139	010-97-7386	A-70280-0179	010-89-7383	A-70280-0219	010-87-9385	A-70280-0259	38
40	010-89-7401	A-70280-0020	010-89-7402	A-70280-0060	010-89-7400	A-70280-0100	010-97-7405	A-70280-0140	010-97-7406	A-70280-0180	010-89-7403	A-70280-0220	010-87-9405	A-70280-0260	40
42	010-89-7421	A-70280-0021	010-89-7422	A-70280-0061	010-89-7420	A-70280-0101	010-97-7425	A-70280-0141	010-97-7426	A-70280-0181	010-89-7423	A-70280-0221	010-87-9425	A-70280-0261	42
44	010-89-7441	A-70280-0022	010-89-7442	A-70280-0062	010-89-7440	A-70280-0102	010-97-7445	A-70280-0142	010-97-7446	A-70280-0182	010-89-7443	A-70280-0222	010-87-9445	A-70280-0262	44
46	010-89-7461	A-70280-0023	010-89-7462	A-70280-0063	010-89-7460	A-70280-0103	010-97-7465	A-70280-0143	010-97-7466	A-70280-0183	010-89-7463	A-70280-0223	010-87-9465	A-70280-0263	46
48	010-89-7481	A-70280-0024	010-89-7482	A-70280-0064	010-89-7480	A-70280-0104	010-97-7485	A-70280-0144	010-97-7486	A-70280-0184	010-89-7483	A-70280-0224	010-87-9485	A-70280-0264	48
50	010-89-7501	A-70280-0025	010-89-7502	A-70280-0065	010-89-7500	A-70280-0105	010-97-7505	A-70280-0145	010-97-7506	A-70280-0185	010-89-7503	A-70280-0225	010-87-9505	A-70280-0265	50
52	010-89-7521	A-70280-0026	010-89-7522	A-70280-0066	010-89-7520	A-70280-0106	010-97-7525	A-70280-0146	010-97-7526	A-70280-0186	010-89-7523	A-70280-0226	010-87-9525	A-70280-0266	52
54	010-89-7541	A-70280-0027	010-89-7542	A-70280-0067	010-89-7540	A-70280-0107	010-97-7545	A-70280-0147	010-97-7546	A-70280-0187	010-89-7543	A-70280-0227	010-87-9545	A-70280-0267	54
56	010-89-7561	A-70280-0028	010-89-7562	A-70280-0068	010-89-7560	A-70280-0108	010-97-7565	A-70280-0148	010-97-7566	A-70280-0188	010-89-7563	A-70280-0228	010-87-9565	A-70280-0268	56
58	010-89-7581	A-70280-0029	010-89-7582	A-70280-0069	010-89-7580	A-70280-0109	010-97-7585	A-70280-0149	010-97-7586	A-70280-0189	010-89-7583	A-70280-0229	010-87-9585	A-70280-0269	58
60	010-89-7601	A-70280-0030	010-89-7602	A-70280-0070	010-89-7600	A-70280-0110	010-97-7605	A-70280-0150	010-97-7606	A-70280-0190	010-89-7603	A-70280-0230	100-87-9605	A-70280-0270	60
62	010-89-7621	A-70280-0031	010-89-7622	A-70280-0071	010-89-7620	A-70280-0111	010-97-7625	A-70280-0151	010-97-7626	A-70280-0191	010-89-7623	A-70280-0231	010-87-9625	A-70280-0271	62
64	010-89-7641	A-70280-0032	010-89-7642	A-70280-0072	010-89-7640	A-70280-0112	010-97-7645	A-70280-0152	010-97-7646	A-70280-0192	010-89-7643	A-70280-0232	010-87-9645	A-70280-0272	64
66	010-89-7661	A-70280-0033	010-89-7662	A-70280-0073	010-89-7660	A-70280-0113	010-97-7665	A-70280-0153	010-97-7666	A-70280-0193	010-89-7663	A-70280-0233	010-87-9665	A-70280-0273	66
68	010-89-7681	A-70280-0034	010-89-7682	A-70280-0074	010-89-7680	A-70280-0114	010-97-7685	A-70280-0154	010-97-7686	A-70280-0194	010-89-7683	A-70280-0234	010-87-9685	A-70280-0274	68
70	010-89-7701	A-70280-0035	010-89-7702	A-70280-0075	010-89-7700	A-70280-0115	010-97-7705	A-70280-0155	010-97-7706	A-70280-0195	010-89-7703	A-70280-0235	010-87-9705	A-70280-0275	70
72	010-89-7721	A-70280-0036	010-89-7722	A-70280-0076	010-89-7720	A-70280-0116	010-97-7725	A-70280-0156	010-97-7726	A-70280-0196	010-89-7723	A-70280-0236	010-87-9725	A-70280-0276	72
74	010-89-7741	A-70280-0037	010-89-7742	A-70280-0077	010-89-7740	A-70280-0117	010-97-7745	A-70280-0157	010-97-7746	A-70280-0197	010-89-7743	A-70280-0237	010-87-9745	A-70280-0277	74
76	010-89-7761	A-70280-0038	010-89-7762	A-70280-0078	010-89-7760	A-70280-0118	010-97-7765	A-70280-0158	010-97-7766	A-70280-0198	010-89-7763	A-70280-0238	010-87-9765	A-70280-0278	76
78	010-89-7781	A-70280-0039	010-89-7782	A-70280-0079	010-89-7780	A-70280-0119	010-97-7785	A-70280-0159	010-97-7786	A-70280-0199	010-89-7783	A-70280-0239	010-87-9785	A-70280-0279	78
80	010-89-7801	A-70280-0040	010-89-7802	A-70280-0080	010-89-7800	A-70280-0120	010-97-7805	A-70280-0160	010-97-7806	A-70280-0200	010-89-7803	A-70280-0240	010-87-9805	A-70280-0280	80

THIS DRAWING CONTAINS INFORMATION THAT IS PROPRIETARY TO MOLEX ELECTRONIC TECHNOLOGIES, LLC AND SHOULD NOT BE USED WITHOUT WRITTEN PERMISSION

DIMENSION UNITS	SCALE
MM/IN	1:1

GENERAL TOLERANCES (UNLESS SPECIFIED)

	MM	INCH
4 PLACES	±	±
3 PLACES	±	± 0.005
2 PLACES	± 0.13	± 0.01
1 PLACE	± 0.25	±
0 PLACES	±	±
ANGULAR TOL	± 0.5 °	

DRAFT WHERE APPLICABLE MUST REMAIN WITHIN DIMENSIONS

CURRENT REV DESC:

EC NO: 742602
DRWN: SUAIFR 2023/02/28
CHK'D: SUAIFR 2023/03/16
APPR: MRAMAKRISHNA 2023/03/20

INITIAL REVISION:
DRWN: SMR 04/19/1993
APPR: SMR 04/19/1993

THIRD ANGLE PROJECTION | DRAWING: C-SIZE | SERIES: 70280

molex

SALES ASSY-HIGH TEMP.
DUAL ROW WAFER W/BREAK- OFF OPT. .025 SQ PINS

PRODUCT CUSTOMER DRAWING

DOCUMENT NUMBER	DOC TYPE	DOC PART	REVISION
SDA-70280-0001-4000	PSD	001	H1

MATERIAL NUMBER	CUSTOMER	SHEET NUMBER
SEE TABLE	GENERAL MARKET	2 OF 9

DOCUMENT STATUS	P1	RELEASE DATE	2023/03/20 10:44:28

FORMAT: Eng-lega-master-tb-prod-C
REVISION: D
DATE: 2018/01/18

ENGINEERING NUMBER A-70280-	RELEASE FOR MANUFACTURE			E REF.		J REF.	C ±(0.25) .010			MATING END PLATING			P.C BOARD END PLATING			FOR PACKAGING INFORMATION, SEE NOTE 4, SHEET 1 (UNLESS OTHERWISE SPECIFIED BELOW)
										TYPE	D MEAS.		TYPE	F MEAS.		
-0281/-0320	R.F.M.			(2.92) .115		(12.83) .505	(7.62) .300			TIN	(4.57) .180		TIN	(1.27) .050		PK-70873-0090
-0361/-0399	R.F.M.			(3.68) .145		(17.02) .670	(11.05) .435			TIN	(6.46) .254		TIN	(1.23) .048		PK-70873-0276
-0549/-0588	R.F.M.			(2.72) .107		(11.10) .437	(6.10) .240			TIN	(2.54) .100		TIN	(1.27) .050		PK-70873-0090
-0589/-0628	R.F.M.			(4.45) .175		(12.83) .505	(6.10) .240			TIN	(2.54) .100		TIN	(1.27) .050		

CKTS	EDP NUMBER	ENG NUMBER	EDP NUMBER	ENG NUMBER	EDP NUMBER	ENG NUMBER	EDP NUMBER	ENG NUMBER	EDP NUMBER	ENG NUMBER	EDP NUMBER	ENG NUMBER	EDP NUMBER	ENG NUMBER	CKTS
	N.A	AX-70280-0281							N/A	A-70280-0549	N/A	A-70280-0589			
4	010-97-7047	A-70280-0282			70280-0361	A-70280-0361			70280-0550	A-70280-0550	70280-0590	A-70280-0590			4
6	010-97-7067	A-70280-0283			70280-0362	A-70280-0362			70280-0551	A-70280-0551	70280-0591	A-70280-0591			6
8	010-97-7087	A-70280-0284			70280-0363	A-70280-0363			70280-0552	A-70280-0552	70280-0592	A-70280-0592			8
10	010-97-7107	A-70280-0285			70280-0364	A-70280-0364			70280-0553	A-70280-0553	70280-0593	A-70280-0593			10
12	010-97-7127	A-70280-0286			70280-0365	A-70280-0365			70280-0554	A-70280-0554	70280-0594	A-70280-0594			12
14	010-97-7147	A-70280-0287			70280-0366	A-70280-0366			70280-0555	A-70280-0555	70280-0595	A-70280-0595			14
16	010-97-7167	A-70280-0288			70280-0367	A-70280-0367			70280-0556	A-70280-0556	70280-0596	A-70280-0596			16
18	010-97-7187	A-70280-0289			70280-0368	A-70280-0368			70280-0557	A-70280-0557	70280-0597	A-70280-0597			18
20	010-97-7207	A-70280-0290			70280-0369	A-70280-0369			70280-0558	A-70280-0558	70280-0598	A-70280-0598			20
22	010-97-7227	A-70280-0291			70280-0370	A-70280-0370			70280-0559	A-70280-0559	70280-0599	A-70280-0599			22
24	010-97-7247	A-70280-0292			70280-0371	A-70280-0371			70280-0560	A-70280-0560	70280-0600	A-70280-0600			24
26	010-97-7267	A-70280-0293			70280-0372	A-70280-0372			70280-0561	A-70280-0561	70280-0601	A-70280-0601			26
28	010-97-7287	A-70280-0294			70280-0373	A-70280-0373			70280-0562	A-70280-0562	70280-0602	A-70280-0602			28
30	010-97-7307	A-70280-0295			70280-0374	A-70280-0374			70280-0563	A-70280-0563	70280-0603	A-70280-0603			30
32	010-97-7327	A-70280-0296			70280-0375	A-70280-0375			70280-0564	A-70280-0564	70280-0604	A-70280-0604			32
34	010-97-7347	A-70280-0297			70280-0376	A-70280-0376			70280-0565	A-70280-0565	70280-0605	A-70280-0605			34
36	010-97-7367	A-70280-0298			70280-0377	A-70280-0377			70280-0566	A-70280-0566	70280-0606	A-70280-0606			36
38	010-97-7387	A-70280-0299			70280-0378	A-70280-0378			70280-0567	A-70280-0567	70280-0607	A-70280-0607			38
40	010-97-7407	A-70280-0300			70280-0379	A-70280-0379			70280-0568	A-70280-0568	70280-0608	A-70280-0608			40
42	010-97-7427	A-70280-0301			70280-0380	A-70280-0380			70280-0569	A-70280-0569	70280-0609	A-70280-0609			42
44	010-97-7447	A-70280-0302			70280-0381	A-70280-0381			70280-0570	A-70280-0570	70280-0610	A-70280-0610			44
46	010-97-7467	A-70280-0303			70280-0382	A-70280-0382			70280-0571	A-70280-0571	70280-0611	A-70280-0611			46
48	010-97-7487	A-70280-0304			70280-0383	A-70280-0383			70280-0572	A-70280-0572	70280-0612	A-70280-0612			48
50	010-97-7507	A-70280-0305			70280-0384	A-70280-0384			70280-0573	A-70280-0573	70280-0613	A-70280-0613			50
52	010-97-7527	A-70280-0306			70280-0385	A-70280-0385			70280-0574	A-70280-0574	70280-0614	A-70280-0614			52
54	010-97-7547	A-70280-0307			70280-0386	A-70280-0386			70280-0575	A-70280-0575	70280-0615	A-70280-0615			54
56	010-97-7567	A-70280-0308			70280-0387	A-70280-0387			70280-0576	A-70280-0576	70280-0616	A-70280-0616			56
58	010-97-7587	A-70280-0309			70280-0388	A-70280-0388			70280-0577	A-70280-0577	70280-0617	A-70280-0617			58
60	010-97-7607	A-70280-0310			70280-0389	A-70280-0389			70280-0578	A-70280-0578	70280-0618	A-70280-0618			60
62	010-97-7627	A-70280-0311			70280-0390	A-70280-0390			70280-0579	A-70280-0579	70280-0619	A-70280-0619			62
64	010-97-7647	A-70280-0312			70280-0391	A-70280-0391			70280-0580	A-70280-0580	70280-0620	A-70280-0620			64
66	010-97-7667	A-70280-0313			70280-0392	A-70280-0392			70280-0581	A-70280-0581	70280-0621	A-70280-0621			66
68	010-97-7687	A-70280-0314			70280-0393	A-70280-0393			70280-0582	A-70280-0582	70280-0622	A-70280-0622			68
70	010-97-7707	A-70280-0315			70280-0394	A-70280-0394			70280-0583	A-70280-0583	70280-0623	A-70280-0623			70
72	010-97-7727	A-70280-0316			70280-0395	A-70280-0395			70280-0584	A-70280-0584	70280-0624	A-70280-0624			72
74	010-97-7747	A-70280-0317			70280-0396	A-70280-0396			70280-0585	A-70280-0585	70280-0625	A-70280-0625			74
76	010-97-7767	A-70280-0318			70280-0397	A-70280-0397			70280-0586	A-70280-0586	70280-0626	A-70280-0626			76
78	010-97-7787	A-70280-0319			70280-0398	A-70280-0398			70280-0587	A-70280-0587	70280-0627	A-70280-0627			78
80	010-97-7807	A-70280-0320			70280-0399	A-70280-0399			70280-0588	A-70280-0588	70280-0628	A-70280-0628			80

THIS DRAWING CONTAINS INFORMATION THAT IS PROPRIETARY TO MOLEX ELECTRONIC TECHNOLOGIES, LLC AND SHOULD NOT BE USED WITHOUT WRITTEN PERMISSION

DIMENSION UNITS	SCALE
MM/IN	1:1

GENERAL TOLERANCES (UNLESS SPECIFIED)

	MM	INCH
4 PLACES	±	±
3 PLACES	±	± 0.005
2 PLACES	± 0.13	± 0.01
1 PLACE	± 0.25	±
0 PLACES	±	±
ANGULAR TOL	± 0.5 °	

DRAFT WHERE APPLICABLE MUST REMAIN WITHIN DIMENSIONS

CURRENT REV DESC:

EC NO: 742602
DRWN: SUAIFR 2023/02/28
CHK'D: SUAIFR 2023/03/16
APPR: MRAMAKRISHNA 2023/03/20

INITIAL REVISION:
DRWN: SMR 04/19/1993
APPR: SMR 04/19/1993

THIRD ANGLE PROJECTION | DRAWING: C-SIZE | SERIES: 70280

molex

SALES ASSY-HIGH TEMP.
DUAL ROW WAFER W/BREAK- OFF OPT. .025 SQ PINS

PRODUCT CUSTOMER DRAWING

DOCUMENT NUMBER	DOC TYPE	DOC PART	REVISION
SDA-70280-0001-4000	PSD	001	H1

MATERIAL NUMBER	CUSTOMER	SHEET NUMBER
SEE TABLE	GENERAL MARKET	3 OF 9

DOCUMENT STATUS	P1	RELEASE DATE	2023/03/20 10:44:28

FORMAT: Eng-lega-master-tb-prod-C
REVISION: D
DATE: 2018/01/18

ENGINEERING NUMBER A-70280-	RELEASE FOR MANUFACTURE			E REF.		J REF.	C ±(0.25) .010			MATING END PLATING			P.C BOARD END PLATING			FOR PACKAGING INFORMATION, SEE NOTE 4, SHEET 1 (UNLESS OTHERWISE SPECIFIED BELOW)
										TYPE	D MEAS.		TYPE	F MEAS.		
-0629/-0668	R.F.M.			(4.45) .175		(12.83) .505	(6.10) .240			15 GOLD	(2.54) .100		TIN	(1.27) .050		
-0669/-0708	R.F.M.			(4.45) .175		(12.83) .505	(6.10) .240			30 GOLD	(2.54) .100		TIN	(1.27) .050		
-0709/-0748	R.F.M.			(4.70) .185		(15.11) .595	(8.13) .320			TIN	(4.57) .180		TIN	(1.27) .050		
-0749/-0788	R.F.M.			(4.70) .185		(15.11) .595	(8.13) .320			15 GOLD	(4.57) .180		TIN	(1.27) .050		
-0789/-0828	R.F.M.			(4.70) .185		(15.11) .595	(8.13) .320			30 GOLD	(4.57) .180		TIN	(1.27) .050		
-0829/-0868	R.F.M.			(5.08) .200		(13.21) .520	(5.84) .230			TIN	(2.54) .100		TIN	(1.27) .050		

CKTS	EDP NUMBER	ENG NUMBER	EDP NUMBER	ENG NUMBER	EDP NUMBER	ENG NUMBER	EDP NUMBER	ENG NUMBER	EDP NUMBER	ENG NUMBER	EDP NUMBER	ENG NUMBER	EDP NUMBER	ENG NUMBER	CKTS
	N/A	A-70280-0629	N/A	A-70280-0669	N/A	A-70280-0709	N/A	A-70280-0749	N/A	A-70280-0789	N/A	A-70280-0829			
4	70280-0630	A-70280-0630	70280-0670	A-70280-0670	70280-0710	A-70280-0710	70280-0750	A-70280-0750	70280-0790	A-70280-0790	70280-0830	A-70280-0830			4
6	70280-0631	A-70280-0631	70280-0671	A-70280-0671	70280-0711	A-70280-0711	70280-0751	A-70280-0751	70280-0791	A-70280-0791	70280-0831	A-70280-0831			6
8	70280-0632	A-70280-0632	70280-0672	A-70280-0672	70280-0712	A-70280-0712	70280-0752	A-70280-0752	70280-0792	A-70280-0792	70280-0832	A-70280-0832			8
10	70280-0633	A-70280-0633	70280-0673	A-70280-0673	70280-0713	A-70280-0713	70280-0753	A-70280-0753	70280-0793	A-70280-0793	70280-0833	A-70280-0833			10
12	70280-0634	A-70280-0634	70280-0674	A-70280-0674	70280-0714	A-70280-0714	70280-0754	A-70280-0754	70280-0794	A-70280-0794	70280-0834	A-70280-0834			12
14	70280-0635	A-70280-0635	70280-0675	A-70280-0675	70280-0715	A-70280-0715	70280-0755	A-70280-0755	70280-0795	A-70280-0795	70280-0835	A-70280-0835			14
16	70280-0636	A-70280-0636	70280-0676	A-70280-0676	70280-0716	A-70280-0716	70280-0756	A-70280-0756	70280-0796	A-70280-0796	70280-0836	A-70280-0836			16
18	70280-0637	A-70280-0637	70280-0677	A-70280-0677	70280-0717	A-70280-0717	70280-0757	A-70280-0757	70280-0797	A-70280-0797	70280-0837	A-70280-0837			18
20	70280-0638	A-70280-0638	70280-0678	A-70280-0678	70280-0718	A-70280-0718	70280-0758	A-70280-0758	70280-0798	A-70280-0798	70280-0838	A-70280-0838			20
22	70280-0639	A-70280-0639	70280-0679	A-70280-0679	70280-0719	A-70280-0719	70280-0759	A-70280-0759	70280-0799	A-70280-0799	70280-0839	A-70280-0839			22
24	70280-0640	A-70280-0640	70280-0680	A-70280-0680	70280-0720	A-70280-0720	70280-0760	A-70280-0760	70280-0800	A-70280-0800	70280-0840	A-70280-0840			24
26	70280-0641	A-70280-0641	70280-0681	A-70280-0681	70280-0721	A-70280-0721	70280-0761	A-70280-0761	70280-0801	A-70280-0801	70280-0841	A-70280-0841			26
28	70280-0642	A-70280-0642	70280-0682	A-70280-0682	70280-0722	A-70280-0722	70280-0762	A-70280-0762	70280-0802	A-70280-0802	70280-0842	A-70280-0842			28
30	70280-0643	A-70280-0643	70280-0683	A-70280-0683	70280-0723	A-70280-0723	70280-0763	A-70280-0763	70280-0803	A-70280-0803	70280-0843	A-70280-0843			30
32	70280-0644	A-70280-0644	70280-0684	A-70280-0684	70280-0724	A-70280-0724	70280-0764	A-70280-0764	70280-0804	A-70280-0804	70280-0844	A-70280-0844			32
34	70280-0645	A-70280-0645	70280-0685	A-70280-0685	70280-0725	A-70280-0725	70280-0765	A-70280-0765	70280-0805	A-70280-0805	70280-0845	A-70280-0845			34
36	70280-0646	A-70280-0646	70280-0686	A-70280-0686	70280-0726	A-70280-0726	70280-0766	A-70280-0766	70280-0806	A-70280-0806	70280-0846	A-70280-0846			36
38	70280-0647	A-70280-0647	70280-0687	A-70280-0687	70280-0727	A-70280-0727	70280-0767	A-70280-0767	70280-0807	A-70280-0807	70280-0847	A-70280-0847			38
40	70280-0648	A-70280-0648	70280-0688	A-70280-0688	70280-0728	A-70280-0728	70280-0768	A-70280-0768	70280-0808	A-70280-0808	70280-0848	A-70280-0848			40
42	70280-0649	A-70280-0649	70280-0689	A-70280-0689	70280-0729	A-70280-0729	70280-0769	A-70280-0769	70280-0809	A-70280-0809	70280-0849	A-70280-0849			42
44	70280-0650	A-70280-0650	70280-0690	A-70280-0690	70280-0730	A-70280-0730	70280-0770	A-70280-0770	70280-0810	A-70280-0810	70280-0850	A-70280-0850			44
46	70280-0651	A-70280-0651	70280-0691	A-70280-0691	70280-0731	A-70280-0731	70280-0771	A-70280-0771	70280-0811	A-70280-0811	70280-0851	A-70280-0851			46
48	70280-0652	A-70280-0652	70280-0692	A-70280-0692	70280-0732	A-70280-0732	70280-0772	A-70280-0772	70280-0812	A-70280-0812	70280-0852	A-70280-0852			48
50	70280-0653	A-70280-0653	70280-0693	A-70280-0693	70280-0733	A-70280-0733	70280-0773	A-70280-0773	70280-0813	A-70280-0813	70280-0853	A-70280-0853			50
52	70280-0654	A-70280-0654	70280-0694	A-70280-0694	70280-0734	A-70280-0734	70280-0774	A-70280-0774	70280-0814	A-70280-0814	70280-0854	A-70280-0854			52
54	70280-0655	A-70280-0655	70280-0695	A-70280-0695	70280-0735	A-70280-0735	70280-0775	A-70280-0775	70280-0815	A-70280-0815	70280-0855	A-70280-0855			54
56	70280-0656	A-70280-0656	70280-0696	A-70280-0696	70280-0736	A-70280-0736	70280-0776	A-70280-0776	70280-0816	A-70280-0816	70280-0856	A-70280-0856			56
58	70280-0657	A-70280-0657	70280-0697	A-70280-0697	70280-0737	A-70280-0737	70280-0777	A-70280-0777	70280-0817	A-70280-0817	70280-0857	A-70280-0857			58
60	70280-0658	A-70280-0658	70280-0698	A-70280-0698	70280-0738	A-70280-0738	70280-0778	A-70280-0778	70280-0818	A-70280-0818	70280-0858	A-70280-0858			60
62	70280-0659	A-70280-0659	70280-0699	A-70280-0699	70280-0739	A-70280-0739	70280-0779	A-70280-0779	70280-0819	A-70280-0819	70280-0859	A-70280-0859			62
64	70280-0660	A-70280-0660	70280-0700	A-70280-0700	70280-0740	A-70280-0740	70280-0780	A-70280-0780	70280-0820	A-70280-0820	70280-0860	A-70280-0860			64
66	70280-0661	A-70280-0661	70280-0701	A-70280-0701	70280-0741	A-70280-0741	70280-0781	A-70280-0781	70280-0821	A-70280-0821	70280-0861	A-70280-0861			66
68	70280-0662	A-70280-0662	70280-0702	A-70280-0702	70280-0742	A-70280-0742	70280-0782	A-70280-0782	70280-0822	A-70280-0822	70280-0862	A-70280-0862			68
70	70280-0663	A-70280-0663	70280-0703	A-70280-0703	70280-0743	A-70280-0743	70280-0783	A-70280-0783	70280-0823	A-70280-0823	70280-0863	A-70280-0863			70
72	70280-0664	A-70280-0664	70280-0704	A-70280-0704	70280-0744	A-70280-0744	70280-0784	A-70280-0784	70280-0824	A-70280-0824	70280-0864	A-70280-0864			72
74	70280-0665	A-70280-0665	70280-0705	A-70280-0705	70280-0745	A-70280-0745	70280-0785	A-70280-0785	70280-0825	A-70280-0825	70280-0865	A-70280-0865			74
76	70280-0666	A-70280-0666	70280-0706	A-70280-0706	70280-0746	A-70280-0746	70280-0786	A-70280-0786	70280-0826	A-70280-0826	70280-0866	A-70280-0866			76
78	70280-0667	A-70280-0667	70280-0707	A-70280-0707	70280-0747	A-70280-0747	70280-0787	A-70280-0787	70280-0827	A-70280-0827	70280-0867	A-70280-0867			78
80	70280-0668	A-70280-0668	70280-0708	A-70280-0708	70280-0748	A-70280-0748	70280-0788	A-70280-0788	70280-0828	A-70280-0828	70280-0868	A-70280-0868			80

THIS DRAWING CONTAINS INFORMATION THAT IS PROPRIETARY TO MOLEX ELECTRONIC TECHNOLOGIES, LLC AND SHOULD NOT BE USED WITHOUT WRITTEN PERMISSION

DIMENSION UNITS: MM/IN
SCALE: 1:1

GENERAL TOLERANCES (UNLESS SPECIFIED)

	MM	INCH
4 PLACES	±	±
3 PLACES	±	± 0.005
2 PLACES	± 0.13	± 0.01
1 PLACE	± 0.25	±
0 PLACES	±	±
ANGULAR TOL	± 0.5 °	

DRAFT WHERE APPLICABLE MUST REMAIN WITHIN DIMENSIONS

CURRENT REV DESC:

EC NO: 742602
DRWN: SUAIFR 2023/02/28
CHK'D: SUAIFR 2023/03/16
APPR: MRAMAKRISHNA 2023/03/20

INITIAL REVISION:
DRWN: SMR 04/19/1993
APPR: SMR 04/19/1993

molex

SALES ASSY-HIGH TEMP.
DUAL ROW WAFER W/BREAK- OFF OPT. .025 SQ PINS

PRODUCT CUSTOMER DRAWING

DOCUMENT NUMBER	DOC TYPE	DOC PART	REVISION
SDA-70280-0001-4000	PSD	001	H1

THIRD ANGLE PROJECTION	DRAWING	SERIES	MATERIAL NUMBER	CUSTOMER	SHEET NUMBER
	C-SIZE	70280	SEE TABLE	GENERAL MARKET	4 OF 9

DOCUMENT STATUS	P1	RELEASE DATE	2023/03/20 10:44:28

FORMAT: Eng-lega-master-tb-prod-C
REVISION: D
DATE: 2018/01/18

ENGINEERING NUMBER A-70280-	RELEASE FOR MANUFACTURE			E REF.		J REF.	C ±(0.25) .010			MATING END PLATING			P.C BOARD END PLATING			FOR PACKAGING INFORMATION, SEE NOTE 4, SHEET 1 (UNLESS OTHERWISE SPECIFIED BELOW)
										TYPE	D MEAS.		TYPE	F MEAS.		
-0439/-0448	R.F.M.			(2.72) .107		(11.10) .437	(6.10) .240			TIN	(2.54) .100		TIN	(1.27) .050		
-0449/-0458	R.F.M.			(2.72) .107		(11.10) .437	(6.10) .240			15 GOLD	(2.54) .100		TIN	(1.27) .050		
-0459/-0468	R.F.M.			(2.72) .107		(11.10) .437	(6.10) .240			30 GOLD	(2.54) .100		TIN	(1.23) .048		
-0469/-0478	R.F.M.			(2.79) .110		(13.21) .520	(8.13) .320			TIN	(4.57) .180		TIN	(1.27) .050		
-0479/-0488	R.F.M.			(2.79) .110		(13.21) .520	(8.13) .320			15 GOLD	(4.57) .180		TIN	(1.27) .050		
-0489/-0498	R.F.M.			(2.79) .110		(13.21) .520	(8.13) .320			30 GOLD	(4.57) .180		TIN	(1.27) .050		
-0499/-0508	R.F.M.			(3.94) .155		(12.32) .485	(6.10) .240			30 GOLD	(2.54) .100		TIN	(1.27) .050		

CKTS	EDP NUMBER	ENG NUMBER	EDP NUMBER	ENG NUMBER	EDP NUMBER	ENG NUMBER	EDP NUMBER	ENG NUMBER	EDP NUMBER	ENG NUMBER	EDP NUMBER	ENG NUMBER	EDP NUMBER	ENG NUMBER	CKTS
82	70280-0439	A-70280-0439	70280-0449	A-70280-0449	70280-0459	A-70280-0459	70280-0469	A-70280-0469	70280-0479	A-70280-0479	70280-0489	A-70280-0489	70280-0499	A-70280-0499	82
84	70280-0440	A-70280-0440	70280-0450	A-70280-0450	70280-0460	A-70280-0460	70280-0470	A-70280-0470	70280-0480	A-70280-0480	70280-0490	A-70280-0490	70280-0500	A-70280-0500	84
86	70280-0441	A-70280-0441	70280-0451	A-70280-0451	70280-0461	A-70280-0461	70280-0471	A-70280-0471	70280-0481	A-70280-0481	70280-0491	A-70280-0491	70280-0501	A-70280-0501	86
88	70280-0442	A-70280-0442	70280-0452	A-70280-0452	70280-0462	A-70280-0462	70280-0472	A-70280-0472	70280-0482	A-70280-0482	70280-0492	A-70280-0492	70280-0502	A-70280-0502	88
90	70280-0443	A-70280-0443	70280-0453	A-70280-0453	70280-0463	A-70280-0463	70280-0473	A-70280-0473	70280-0483	A-70280-0483	70280-0493	A-70280-0493	70280-0503	A-70280-0503	90
92	70280-0444	A-70280-0444	70280-0454	A-70280-0454	70280-0464	A-70280-0464	70280-0474	A-70280-0474	70280-0484	A-70280-0484	70280-0494	A-70280-0494	70280-0504	A-70280-0504	92
94	70280-0445	A-70280-0445	70280-0455	A-70280-0455	70280-0465	A-70280-0465	70280-0475	A-70280-0475	70280-0485	A-70280-0485	70280-0495	A-70280-0495	70280-0505	A-70280-0505	94
96	70280-0446	A-70280-0446	70280-0456	A-70280-0456	70280-0466	A-70280-0466	70280-0476	A-70280-0476	70280-0486	A-70280-0486	70280-0496	A-70280-0496	70280-0506	A-70280-0506	96
98	70280-0447	A-70280-0447	70280-0457	A-70280-0457	70280-0467	A-70280-0467	70280-0477	A-70280-0477	70280-0487	A-70280-0487	70280-0497	A-70280-0497	70280-0507	A-70280-0507	98
100	70280-0448	A-70280-0448	70280-0458	A-70280-0458	70280-0468	A-70280-0468	70280-0478	A-70280-0478	70280-0488	A-70280-0488	70280-0498	A-70280-0498	70280-0508	A-70280-0508	100

THIS DRAWING CONTAINS INFORMATION THAT IS PROPRIETARY TO MOLEX ELECTRONIC TECHNOLOGIES, LLC AND SHOULD NOT BE USED WITHOUT WRITTEN PERMISSION

DIMENSION UNITS	SCALE
MM/IN	1:1

GENERAL TOLERANCES (UNLESS SPECIFIED)

	MM	INCH
4 PLACES	±	±
3 PLACES	±	± 0.005
2 PLACES	± 0.13	± 0.01
1 PLACE	± 0.25	±
0 PLACES	±	±
ANGULAR TOL	± 0.5 °	

DRAFT WHERE APPLICABLE MUST REMAIN WITHIN DIMENSIONS

CURRENT REV DESC:

EC NO: 742602
DRWN: SUAIFR 2023/02/28
CHK'D: SUAIFR 2023/03/16
APPR: MRAMAKRISHNA 2023/03/20

INITIAL REVISION:
DRWN: SMR 04/19/1993
APPR: SMR 04/19/1993

THIRD ANGLE PROJECTION | DRAWING: C-SIZE | SERIES: 70280

molex

SALES ASSY-HIGH TEMP.
DUAL ROW WAFER W/BREAK- OFF OPT. .025 SQ PINS

PRODUCT CUSTOMER DRAWING

DOCUMENT NUMBER	DOC TYPE	DOC PART	REVISION
SDA-70280-0001-4000	PSD	001	H1

MATERIAL NUMBER	CUSTOMER	SHEET NUMBER
SEE TABLE	GENERAL MARKET	5 OF 9

DOCUMENT STATUS	P1	RELEASE DATE	2023/03/20 10:44:28

FORMAT: Eng-tega-master-tb-prod-C
REVISION: D
DATE: 2018/01/18

ENGINEERING NUMBER A-70280-	RELEASE FOR MANUFACTURE			E REF.		J REF.	C ±(0.25) .010			MATING END PLATING			P.C BOARD END PLATING			FOR PACKAGING INFORMATION, SEE NOTE 4, SHEET 1 (UNLESS OTHERWISE SPECIFIED BELOW)
										TYPE	D MEAS.		TYPE	F MEAS.		
-0509/-0518	R.F.M.			(2.92) .115		(12.83) .505	(7.62) .300			TIN	(4.57) .180		TIN	(1.27) .050		PK-70873-0090
-0529/-0538	R.F.M.			(3.68) .145		(17.02) .670	(11.05) .435			TIN	(6.46) .254		TIN	(1.23) .048		PK-70873-0276
-0869/-0878	R.F.M.			(2.67) .105		(11.05) .435	(6.10) .240			TIN	(2.54) .100		TIN	(1.27) .050		PK-70873-0090
-0879/-0888	R.F.M.			(4.45) .175		(12.83) .505	(6.10) .240			TIN	(2.54) .100		TIN	(1.27) .050		
-0889/-0898	R.F.M.			(4.45) .175		(12.83) .505	(6.10) .240			15 GOLD	(2.54) .100		TIN	(1.27) .050		

CKTS	EDP NUMBER	ENG NUMBER	EDP NUMBER	ENG NUMBER	EDP NUMBER	ENG NUMBER	EDP NUMBER	ENG NUMBER	EDP NUMBER	ENG NUMBER	EDP NUMBER	ENG NUMBER	EDP NUMBER	ENG NUMBER	CKTS
82	70280-0509	A-70280-0509			70280-0529	A-70280-0529			70280-0869	A-70280-0869	70280-0879	A-70280-0879	70280-0889	A-70280-0889	82
84	70280-0510	A-70280-0510			70280-0530	A-70280-0530			70280-0870	A-70280-0870	70280-0880	A-70280-0880	70280-0890	A-70280-0890	84
86	70280-0511	A-70280-0511			70280-0531	A-70280-0531			70280-0871	A-70280-0871	70280-0881	A-70280-0881	70280-0891	A-70280-0891	86
88	70280-0512	A-70280-0512			70280-0532	A-70280-0532			70280-0872	A-70280-0872	70280-0882	A-70280-0882	70280-0892	A-70280-0892	88
90	70280-0513	A-70280-0513			70280-0533	A-70280-0533			70280-0873	A-70280-0873	70280-0883	A-70280-0883	70280-0893	A-70280-0893	90
92	70280-0514	A-70280-0514			70280-0534	A-70280-0534			70280-0874	A-70280-0874	70280-0884	A-70280-0884	70280-0894	A-70280-0894	92
94	70280-0515	A-70280-0515			70280-0535	A-70280-0535			70280-0875	A-70280-0875	70280-0885	A-70280-0885	70280-0895	A-70280-0895	94
96	70280-0516	A-70280-0516			70280-0536	A-70280-0536			70280-0876	A-70280-0876	70280-0886	A-70280-0886	70280-0896	A-70280-0896	96
98	70280-0517	A-70280-0517			70280-0537	A-70280-0537			70280-0877	A-70280-0877	70280-0887	A-70280-0887	70280-0897	A-70280-0897	98
100	70280-0518	A-70280-0518			70280-0538	A-70280-0538			70280-0878	A-70280-0878	70280-0888	A-70280-0888	70280-0898	A-70280-0898	100

THIS DRAWING CONTAINS INFORMATION THAT IS PROPRIETARY TO MOLEX ELECTRONIC TECHNOLOGIES, LLC AND SHOULD NOT BE USED WITHOUT WRITTEN PERMISSION

DIMENSION UNITS	SCALE
MM/IN	1:1

GENERAL TOLERANCES (UNLESS SPECIFIED)

	MM	INCH
4 PLACES	±	±
3 PLACES	±	± 0.005
2 PLACES	± 0.13	± 0.01
1 PLACE	± 0.25	±
0 PLACES	±	±
ANGULAR TOL	± 0.5 °	

DRAFT WHERE APPLICABLE MUST REMAIN WITHIN DIMENSIONS

CURRENT REV DESC:

EC NO: 742602
DRWN: SUAIFR 2023/02/28
CHK'D: SUAIFR 2023/03/16
APPR: MRAMAKRISHNA 2023/03/20

INITIAL REVISION:
DRWN: SMR 04/19/1993
APPR: SMR 04/19/1993

THIRD ANGLE PROJECTION | DRAWING: C-SIZE | SERIES: 70280

molex

SALES ASSY-HIGH TEMP.
DUAL ROW WAFER W/BREAK- OFF OPT. .025 SQ PINS

PRODUCT CUSTOMER DRAWING

DOCUMENT NUMBER	DOC TYPE	DOC PART	REVISION
SDA-70280-0001-4000	PSD	001	H1

MATERIAL NUMBER	CUSTOMER	SHEET NUMBER
SEE TABLE	GENERAL MARKET	6 OF 9

DOCUMENT STATUS	P1	RELEASE DATE	2023/03/20 10:44:28

FORMAT: Eng-tega-master-tb-prod-C
REVISION: D
DATE: 2018/01/18

ENGINEERING NUMBER A-70280-	RELEASE FOR MANUFACTURE			E REF.		J REF.	C ±(0.25) .010			MATING END PLATING			P.C BOARD END PLATING			FOR PACKAGING INFORMATION, SEE NOTE 4, SHEET 1 (UNLESS OTHERWISE SPECIFIED BELOW)
										TYPE	D MEAS.		TYPE	F MEAS.		
-0899/-0908	R.F.M.			(4.45) .175		(12.83) .505	(6.10) .240			30 GOLD	(2.54) .100		TIN	(1.27) .050		
-0909/-0918	R.F.M.			(4.70) .185		(15.11) .595	(8.13) .320			TIN	(4.57) .180		TIN	(1.27) .050		
-0919/-0928	R.F.M.			(4.70) .185		(15.11) .595	(8.13) .320			15 GOLD	(4.57) .180		TIN	(1.27) .050		
-0929/-0938	R.F.M.			(4.70) .185		(15.11) .595	(8.13) .320			30 GOLD	(4.57) .180		TIN	(1.27) .050		
-0939/-0948	R.F.M.			(5.08) .200		(13.21) .520	(5.84) .230			TIN	(2.54) .100		TIN	(1.27) .050		

CKTS	EDP NUMBER	ENG NUMBER	EDP NUMBER	ENG NUMBER	EDP NUMBER	ENG NUMBER	EDP NUMBER	ENG NUMBER	EDP NUMBER	ENG NUMBER	EDP NUMBER	ENG NUMBER	EDP NUMBER	ENG NUMBER	CKTS
82	70280-0899	A-70280-0899	70280-0909	A-70280-0909	70280-0919	A-70280-0919	70280-0929	A-70280-0929	70280-0939	A-70280-0939					82
84	70280-0900	A-70280-0900	70280-0910	A-70280-0910	70280-0920	A-70280-0920	70280-0930	A-70280-0930	70280-0940	A-70280-0940					84
86	70280-0901	A-70280-0901	70280-0911	A-70280-0911	70280-0921	A-70280-0921	70280-0931	A-70280-0931	70280-0941	A-70280-0941					86
88	70280-0902	A-70280-0902	70280-0912	A-70280-0912	70280-0922	A-70280-0922	70280-0932	A-70280-0932	70280-0942	A-70280-0942					88
90	70280-0903	A-70280-0903	70280-0913	A-70280-0913	70280-0923	A-70280-0923	70280-0933	A-70280-0933	70280-0943	A-70280-0943					90
92	70280-0904	A-70280-0904	70280-0914	A-70280-0914	70280-0924	A-70280-0924	70280-0934	A-70280-0934	70280-0944	A-70280-0944					92
94	70280-0905	A-70280-0905	70280-0915	A-70280-0915	70280-0925	A-70280-0925	70280-0935	A-70280-0935	70280-0945	A-70280-0945					94
96	70280-0906	A-70280-0906	70280-0916	A-70280-0916	70280-0926	A-70280-0926	70280-0936	A-70280-0936	70280-0946	A-70280-0946					96
98	70280-0907	A-70280-0907	70280-0917	A-70280-0917	70280-0927	A-70280-0927	70280-0937	A-70280-0937	70280-0947	A-70280-0947					98
100	70280-0908	A-70280-0908	70280-0918	A-70280-0918	70280-0928	A-70280-0928	70280-0938	A-70280-0938	70280-0948	A-70280-0948					100

THIS DRAWING CONTAINS INFORMATION THAT IS PROPRIETARY TO MOLEX ELECTRONIC TECHNOLOGIES, LLC AND SHOULD NOT BE USED WITHOUT WRITTEN PERMISSION

DIMENSION UNITS: MM/IN
SCALE: 1:1

GENERAL TOLERANCES (UNLESS SPECIFIED)

	MM	INCH
4 PLACES	±	±
3 PLACES	±	± 0.005
2 PLACES	± 0.13	± 0.01
1 PLACE	± 0.25	±
0 PLACES	±	±
ANGULAR TOL	± 0.5 °	

DRAFT WHERE APPLICABLE MUST REMAIN WITHIN DIMENSIONS

CURRENT REV DESC:

EC NO: 742602
DRWN: SUAIFR 2023/02/28
CHK'D: SUAIFR 2023/03/16
APPR: MRAMAKRISHNA 2023/03/20

INITIAL REVISION:
DRWN: SMR 04/19/1993
APPR: SMR 04/19/1993

THIRD ANGLE PROJECTION | DRAWING: C-SIZE | SERIES: 70280

molex

SALES ASSY-HIGH TEMP.
DUAL ROW WAFER W/BREAK- OFF OPT. .025 SQ PINS

PRODUCT CUSTOMER DRAWING

DOCUMENT NUMBER	DOC TYPE	DOC PART	REVISION
SDA-70280-0001-4000	PSD	001	H1

MATERIAL NUMBER	CUSTOMER	SHEET NUMBER
SEE TABLE	GENERAL MARKET	7 OF 9

DOCUMENT STATUS	P1	RELEASE DATE	2023/03/20 10:44:28

FORMAT: Eng-tega-master-tb-prod-C
REVISION: D
DATE: 2018/01/18

ENGINEERING NUMBER A-70280-	RELEASE FOR MANUFACTURE			E REF.		J REF.	C ±(0.25) .010			MATING END PLATING			P.C BOARD END PLATING			FOR PACKAGING INFORMATION, SEE NOTE 4, SHEET 1 (UNLESS OTHERWISE SPECIFIED BELOW)
										TYPE	D MEAS.		TYPE	F MEAS.		
-0949/-0987	R.F.M.			(3.43) .135		(11.81) .465	(6.10) .240			15 GOLD	(2.54) .100		TIN	(1.27) .050		
-1130/1168	R.F.M.			(3.56) .140		(15.24) .600	(9.40) .370			15 GOLD	(5.33) .210		TIN	(2.54) .100		
-1169/-1207	R.F.M.			(2.79) .110		(16.51) .650	(11.43) .450			15 GOLD	(4.57) .180		TIN	(2.54) .100		
-1208/-1246	R.F.M.			(5.08) .200		(13.21) .520	(5.84) .230			15 GOLD	(2.54) .100		TIN	(1.27) .050		

CKTS	EDP NUMBER	ENG NUMBER	EDP NUMBER	ENG NUMBER	EDP NUMBER	ENG NUMBER	EDP NUMBER	ENG NUMBER	EDP NUMBER	ENG NUMBER	EDP NUMBER	ENG NUMBER	EDP NUMBER	ENG NUMBER	CKTS
4		A-70280-0949													4
6		A-70280-0950													6
8		A-70280-0951													8
10	70280-0952	A-70280-0952													10
12		A-70280-0953													12
14		A-70280-0954													14
16		A-70280-0955													16
18		A-70280-0956													18
20		A-70280-0957													20
22		A-70280-0958													22
24		A-70280-0959					70280-1218	A-70280-1218							24
26		A-70280-0960	70280-1141	A-70280-1141											26
28		A-70280-0961													28
30		A-70280-0962													30
32		A-70280-0963			70280-1183	A-70280-1183									32
34		A-70280-0964													34
36		A-70280-0965													36
38		A-70280-0966													38
40		A-70280-0967													40
42		A-70280-0968													42
44		A-70280-0969													44
46		A-70280-0970													46
48		A-70280-0971													48
50		A-70280-0972													50
52		A-70280-0973													52
54		A-70280-0974													54
56		A-70280-0975													56
58		A-70280-0976													58
60		A-70280-0977													60
62		A-70280-0978													62
64		A-70280-0979													64
66		A-70280-0980													66
68		A-70280-0981													68
70		A-70280-0982													70
72		A-70280-0983													72
74		A-70280-0984													74
76		A-70280-0985													76
78		A-70280-0986													78
80		A-70280-0987													80

THIS DRAWING CONTAINS INFORMATION THAT IS PROPRIETARY TO MOLEX ELECTRONIC TECHNOLOGIES, LLC AND SHOULD NOT BE USED WITHOUT WRITTEN PERMISSION

DIMENSION UNITS	SCALE
MM/IN	1:1

GENERAL TOLERANCES (UNLESS SPECIFIED)

	MM	INCH
4 PLACES	±	±
3 PLACES	±	± 0.005
2 PLACES	± 0.13	± 0.01
1 PLACE	± 0.25	±
0 PLACES	±	±
ANGULAR TOL	± 0.5 °	

DRAFT WHERE APPLICABLE MUST REMAIN WITHIN DIMENSIONS

CURRENT REV DESC:

EC NO: 742602
DRWN: SUAIFR 2023/02/28
CHK'D: SUAIFR 2023/03/16
APPR: MRAMAKRISHNA 2023/03/20

INITIAL REVISION:
DRWN: SMR 04/19/1993
APPR: SMR 04/19/1993

THIRD ANGLE PROJECTION

DRAWING	SERIES
C-SIZE	70280

molex

SALES ASSY-HIGH TEMP.
DUAL ROW WAFER W/BREAK- OFF OPT. .025 SQ PINS

PRODUCT CUSTOMER DRAWING

DOCUMENT NUMBER	DOC TYPE	DOC PART	REVISION
SDA-70280-0001-4000	PSD	001	H1

MATERIAL NUMBER	CUSTOMER	SHEET NUMBER
SEE TABLE	GENERAL MARKET	8 OF 9

DOCUMENT STATUS	P1	RELEASE DATE	2023/03/20 10:44:28

FORMAT: Eng-lega-master-tb-prod-C
REVISION: D
DATE: 2018/01/18

ENGINEERING NUMBER A-70280-	RELEASE FOR MANUFACTURE			E REF.		J REF.	C ±(0.25) .010			MATING END PLATING			P.C BOARD END PLATING			FOR PACKAGING INFORMATION, SEE NOTE 4, SHEET 1 (UNLESS OTHERWISE SPECIFIED BELOW)
										TYPE	D MEAS.		TYPE	F MEAS.		
-1247 / -1285	R.F.M			(3.68) .145		(17.02) .670	(11.05) .435			TIN	(6.46) 2.54		TIN	(1.23) .048		PK-70873-0276
1286	R.F.M.			(3.56) .140		(15.24) .600	(9.40) .370			TIN	(5.33) .210		TIN	(2.54) .100		

CKTS	EDP NUMBER	ENG NUMBER	EDP NUMBER	ENG NUMBER	ITEM NUMBER	ITEM NUMBER	ITEM NUMBER	CKTS
4								4
6								6
8								8
10								10
12								12
14								14
16								16
18	70280-1254	A-70280-1254						18
20								20
22								22
24								24
26			70280-1286	A-70280-1286				26 H1
28								28
30								30
32								32
34								34
36								36
38								38
40								40
42								42
44								44
46								46
48								48
50								50
52								52
54								54
56								56
58								58
60								60
62								62
64								64
66								66
68								68
70								70
72								72
74								74
76								76
78								78
80								80

THIS DRAWING CONTAINS INFORMATION THAT IS PROPRIETARY TO MOLEX ELECTRONIC TECHNOLOGIES, LLC AND SHOULD NOT BE USED WITHOUT WRITTEN PERMISSION

DIMENSION UNITS	SCALE
MM/IN	1:1

GENERAL TOLERANCES (UNLESS SPECIFIED)

	MM	INCH
4 PLACES	±	±
3 PLACES	±	± 0.005
2 PLACES	± 0.13	± 0.01
1 PLACE	± 0.25	±
0 PLACES	±	±
ANGULAR TOL	± 0.5 °	

DRAFT WHERE APPLICABLE MUST REMAIN WITHIN DIMENSIONS

CURRENT REV DESC:

EC NO: 742602
DRWN: SUAIFR 2023/02/28
CHK'D: SUAIFR 2023/03/16
APPR: MRAMAKRISHNA 2023/03/20

INITIAL REVISION:
DRWN: SMR 04/19/1993
APPR: SMR 04/19/1993

THIRD ANGLE PROJECTION | DRAWING: C-SIZE | SERIES: 70280

molex

SALES ASSY-HIGH TEMP.
DUAL ROW WAFER W/BREAK- OFF OPT. .025 SQ PINS

PRODUCT CUSTOMER DRAWING

DOCUMENT NUMBER	DOC TYPE	DOC PART	REVISION
SDA-70280-0001-4000	PSD	001	H1

MATERIAL NUMBER	CUSTOMER	SHEET NUMBER
SEE TABLE	GENERAL MARKET	9 OF 9

DOCUMENT STATUS	P1	RELEASE DATE	2023/03/20 10:44:28

FORMAT: Eng-lega-master-tb-prod-C
REVISION: D
DATE: 2018/01/18

CKT. SIZE	DIM. A REF. (MM)	DIM. A REF. INCH	DIM. B REF. (MM)	DIM. B REF. INCH
4	(5.08)	.200	(2.54)	.100
6	(7.62)	.300	(5.08)	.200
8	(10.16)	.400	(7.62)	.300
10	(12.70)	.500	(10.16)	.400
12	(15.24)	.600	(12.70)	.500
14	(17.78)	.700	(15.24)	.600
16	(20.32)	.800	(17.78)	.700
18	(22.86)	.900	(20.32)	.800
20	(25.40)	1.000	(22.86)	.900
22	(27.94)	1.100	(25.40)	1.000
24	(30.48)	1.200	(27.94)	1.100
26	(33.02)	1.300	(30.48)	1.200
28	(35.56)	1.400	(33.02)	1.300
30	(38.10)	1.500	(35.56)	1.400
32	(40.64)	1.600	(38.10)	1.500
34	(43.18)	1.700	(40.64)	1.600
36	(45.72)	1.800	(43.18)	1.700
38	(48.26)	1.900	(45.72)	1.800
40	(50.80)	2.000	(48.26)	1.900
42	(53.34)	2.100	(50.80)	2.000
44	(55.88)	2.200	(53.34)	2.100
46	(58.42)	2.300	(55.88)	2.200
48	(60.96)	2.400	(58.42)	2.300
50	(63.50)	2.500	(60.96)	2.400
52	(66.04)	2.600	(63.50)	2.500
54	(68.58)	2.700	(66.04)	2.600
56	(71.12)	2.800	(68.58)	2.700
58	(73.66)	2.900	(71.12)	2.800
60	(76.20)	3.000	(73.66)	2.900
62	(78.74)	3.100	(76.20)	3.000
64	(81.28)	3.200	(78.74)	3.100
66	(83.82)	3.300	(81.28)	3.200
68	(86.36)	3.400	(83.82)	3.300
70	(88.90)	3.500	(86.36)	3.400
72	(91.44)	3.600	(88.90)	3.500
74	(93.98)	3.700	(91.44)	3.600
76	(96.52)	3.800	(93.98)	3.700
78	(99.06)	3.900	(96.52)	3.800
80	(101.60)	4.000	(99.06)	3.900
82	(104.14)	4.100	(101.60)	4.000
84	(106.68)	4.200	(104.14)	4.100
86	(109.22)	4.300	(106.68)	4.200
88	(111.76)	4.400	(109.22)	4.300
90	(114.30)	4.500	(111.76)	4.400
92	(116.84)	4.600	(114.30)	4.500
94	(119.38)	4.700	(116.84)	4.600
96	(121.92)	4.800	(119.38)	4.700
98	(124.46)	4.900	(121.92)	4.800
100	(127.00)	5.000	(124.46)	4.900

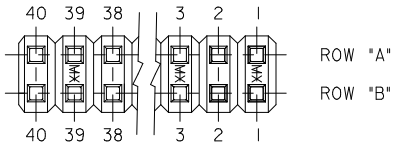

VIEW "AB"

USE FOR LOCATING VOIDED CKTS.
(TOP VIEW SHOWN)
(SEE NOTE 6)

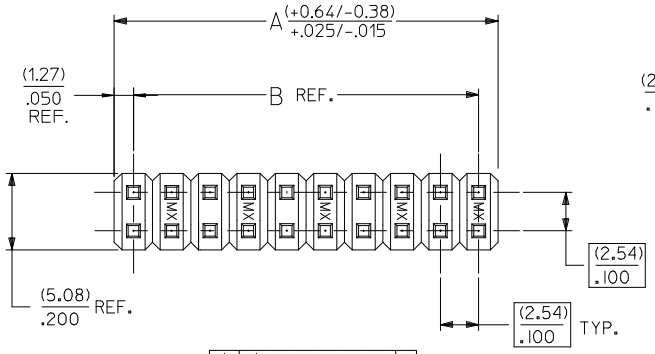

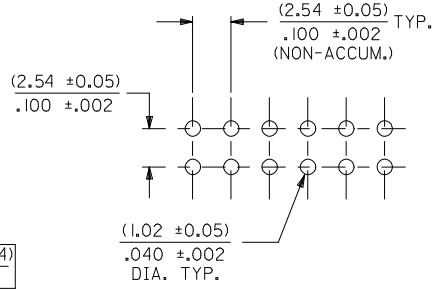

RECOMMENDED P.C. BOARD HOLE LAYOUT

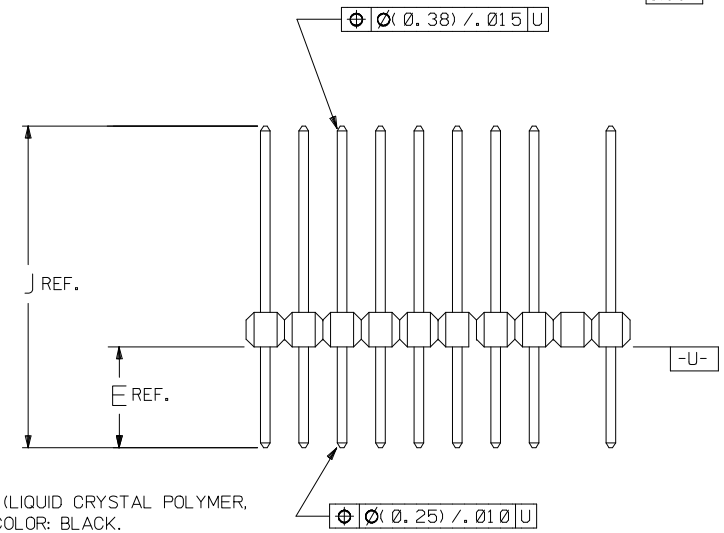

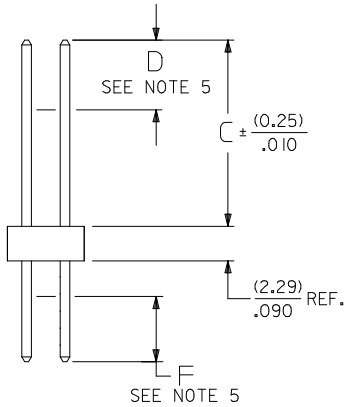

NOTES:

1. MATERIAL:
   PIN: COPPER ALLOY
   WAFER: GLASS FILLED LCP (LIQUID CRYSTAL POLYMER, UL 94V-0, COLOR: BLACK.
2. FINISH:
   TIN = (0.00380)/.000150 MINIMUM TIN PLATE OVER (0.00127)/.000050 MINIMUM NICKEL PLATE.
   15 GOLD = (0.00038)/.000015 MINIMUM GOLD PLATE IN SELECT AREA, (0.00190)/.000075 MINIMUM TIN PLATE IN SELECT AREA, OVER (0.00127)/.000050 MINIMUM NICKEL PLATE OVERALL.
   30 GOLD = (0.00076)/.000030 MINIMUM GOLD PLATE IN SELECT AREA, (0.00190)/.000075 MINIMUM TIN PLATE IN SELECT AREA, OVER (0.00127)/.000050 MINIMUM NICKEL PLATE OVERALL.
   15G/100T = (0.00038)/.000015 MINIMUM GOLD PLATE IN SELECT AREA, (0.00254)/.000100 MINIMUM TIN PLATE IN SELECT AREA, OVER (0.00127)/.000050 MINIMUM NICKEL PLATE OVERALL.

* THE PRIMARY SHIPPING CARTON WILL BE LABELED "COMPLIANT TO RoHS DIRECTIVE 2002/95/EC AND ELV ANNEX II OF DIRECTIVE 2000/53/EC". CARTONS WITHOUT THIS LABEL MAY CONTAIN PRODUCT WITH LEAD PLATING.

3. PRODUCT SPECIFICATION: PS-70280
4. PACKAGING INFORMATION: (UNLESS OTHERWISE NOTED IN TABLES) BULK PACK PER PK-70873-0353.
5. MEASURE POINT FOR PLATING THICKNESS.
6. VOIDED PIN LOCATIONS ARE IDENTIFIED NUMERICALLY FROM RIGHT TO LEFT AND ALPHABETICALLY FROM TOP TO BOTTOM USING VIEW "AB"; SEE CHART FOR LOCATION.
7. PIN PUSHOUT FORCE: 3 POUNDS MINIMUM IN EITHER DIRECTION.
8. FOR ILLUSTRATION PURPOSES, 20 (DUAL 10) CIRCUIT SIZE IS SHOWN.
9. PINS MEET SOLDERABILITY SPEC SMES-152.
10. WAFER TO BE FLAT WITHIN (0.03 MM/CM) .003 IN./IN.
11. THIS PART CONFORMS TO CLASS B REQUIREMENTS OF COSMETIC SPECIFICATION PS-45499-002.

2	J1
1	K
SHT	REV

CORRECTED DIMENSION
EC NO: UCP2009-2631 2009/06/04
DRWN:TRBENES 2009/06/10
CHKD:MKIPPER 2009/06/12
APPR:FSMITH
DESCRIPTION
K REV

QUALITY SYMBOLS
▼=0
▽C=0

GENERAL TOLERANCES (UNLESS SPECIFIED)

	mm	INCH
4 PLACES	± ---	± ---
3 PLACES	± ---	± .005
2 PLACES	± 0.13	± .01
1 PLACE	± 0.25	± ---
ANGULAR ±1/2°		

DRAFT WHERE APPLICABLE MUST REMAIN WITHIN DIMENSIONS

DIMENSION STYLE: MM/IN
SCALE: 4:1
DESIGN UNITS: INCH
THIRD ANGLE PROJECTION

DRAWN BY: RB DATE: 93/01/08
CHECKED BY: DATE:
APPROVED BY: DJB DATE: 93/01/08

TITLE: WAFER ASSY -HIGH TEMP DUAL ROW W/BREAK-OFF OPTION W/VOIDS

molex MOLEX INCORPORATED

MATERIAL NO.: SEE TABLE
DOCUMENT NO.: SDA-70280-5001-9999
SHEET NO.: 1 OF 2
SIZE: C

THIS DRAWING CONTAINS INFORMATION THAT IS PROPRIETARY TO MOLEX INCORPORATED AND SHOULD NOT BE USED WITHOUT WRITTEN PERMISSION

OBSOLETE	ENGINEERING NUMBER	EDP NUMBER		CKT. SIZE	VOIDED PIN LOCATION (SEE NOTE 6) ROW	VOIDED PIN LOCATION (SEE NOTE 6) LOCATION	E REF.		J REF.	C ±.010 (0.25)	PLATING TYPE SEE SHEET 1	CONNECTOR END PLATING TYPE	CONNECTOR END PLATING D MEAS.		P.C. BOARD END PLATING TYPE	P.C. BOARD END PLATING F MEAS.		FOR PACKAGING INFORMATION, SEE NOTE #4 ON SHEET 1 (UNLESS OTHERWISE SPECIFIED BELOW)
	A-70280-5001	10-98-0004		26	B	1	.107 (2.72)		.437 (11.10)	.240 (6.10)	15 GOLD	GOLD	.100 (2.54)		TIN	.050 (1.27)		
	A-70280-5002	10-98-0014		16	A	2	.107 (2.72)		.437 (11.10)	.240 (6.10)	15 GOLD	GOLD	.100 (2.54)		TIN	.050 (1.27)		
	A-70280-5003	70280-5003		38	B	13	.125 (3.18)		.455 (11.56)	.240 (6.10)	15G/100T	GOLD	.100 (2.54)		TIN	.050 (1.27)		
	A-70280-5004	70280-5004		08	B	2	.107 (2.72)		.437 (11.10)	.240 (6.10)	15 GOLD	GOLD	.100 (2.54)		TIN	.050 (1.27)		
	A-70280-5005	70280-5005		06	A B	2 3	.107 (2.72)		.437 (11.10)	.240 (6.10)	15 GOLD	GOLD	.100 (2.54)		TIN	.050 (1.27)		
	A-70280-5006	70280-500		20	A B	7 5	.107 (2.72)		.437 (11.10)	.240 (6.10)	TIN	TIN	.100 (2.54)		TIN	.050 (1.27)		
	A-70280-5007	70280-5007		10	A	1	.107 (2.72)		.437 (11.10)	.240 (6.10)	15 GOLD	GOLD	.100 (2.54)		TIN	.050 (1.27)		
	A-70280-5008	70280-5008		16	A	7	.107 (2.72)		.437 (11.10)	.240 (6.10)	TIN	TIN	.100 (2.54)		TIN	.050 (1.27)		
	A-70280-5009	70280-5009		50	A	13	.107 (2.72)		.437 (11.10)	.240 (6.10)	TIN	TIN	.100 (2.54)		TIN	.050 (1.27)		
	A-70280-5010	70280-5010		26	B	1	.107 (2.72)		.437 (11.10)	.240 (6.10)	15 GOLD	GOLD	.100 (2.54)		TIN	.050 (1.27)		
X	A-70280-5011	70280-5011		26	A B	5,15,21 6,10,22	.107 (2.72)		.437 (11.10)	.240 (6.10)	15 GOLD	GOLD	.100 (2.54)		TIN	.050 (1.27)		
	A-70280-5012	70280-5012		04	B	1,2	.107 (2.72)		.437 (11.10)	.240 (6.10)	15 GOLD	GOLD	.100 (2.54)		TIN	.050 (1.27)		
	A-70280-5013	70280-5013		40	A	11	.107 (2.72)		.437 (11.10)	.240 (6.10)	15 GOLD	GOLD	.100 (2.54)		TIN	.050 (1.27)		
	A-70280-5014	70280-5014		10	A	5	.135 (3.43)		.465 (11.81)	.240 (6.10)	15 GOLD	GOLD	.100 (2.54)		TIN	.050 (1.27)		
	A-70280-5015	70280-5015		10	A	5	.135 (3.43)		.465 (11.81)	.240 (6.10)	30 GOLD	GOLD	.100 (2.54)		TIN	.050 (1.27)		
	A-70280-5016	70280-5016		10	A	5	.110 (2.79)		.440 (11.18)	.240 (6.10)	15 GOLD	GOLD	.100 (2.54)		TIN	.050 (1.27)		
	A-70280-5017	70280-5017		10	B	4	.110 (2.79)		.440 (11.18)	.240 (6.10)	15 GOLD	GOLD	.100 (2.54)		TIN	.050 (1.27)		
	A-70280-5018	70280-5018		16	A	3	.110 (2.79)		.440 (11.18)	.240 (6.10)	15 GOLD	GOLD	.100 (2.54)		TIN	.050 (1.27)		

UPDATE DIMENSIONS
EC NO: UCP2007-3272 2007/06/27
DRWN:ADERR 2007/06/27
CHKD:JBELL 2007/06/28
APPR:FSMITH
DESCRIPTION
REV J1

QUALITY SYMBOLS
▼=0
(C)=0

GENERAL TOLERANCES (UNLESS SPECIFIED)

	mm	INCH
4 PLACES	± ---	± ---
3 PLACES	± ---	± ---
2 PLACES	± ---	± ---
1 PLACE	± ---	± ---
ANGULAR ±1/2°		

DRAFT WHERE APPLICABLE MUST REMAIN WITHIN DIMENSIONS

DIMENSION STYLE: MM/IN
SCALE: ---
DESIGN UNITS: INCH
THIRD ANGLE PROJECTION

DRAWN BY: RB DATE: 93/01/08
CHECKED BY: DATE:
APPROVED BY: DJB DATE: 93/01/08

TITLE: WAFER ASSEM.-HIGH TEMP. DUAL ROW W/BREAK-OFF OPTION W/VOIDS

molex MOLEX INCORPORATED

MATERIAL NO.: SEE TABLE
DOCUMENT NO.: SDA-70280-5001-9999
SHEET NO.: 2 OF 2
SIZE: C

THIS DRAWING CONTAINS INFORMATION THAT IS PROPRIETARY TO MOLEX INCORPORATED AND SHOULD NOT BE USED WITHOUT WRITTEN PERMISSION