© 2019 TE Connectivity. All Rights Reserved.

REVISIONS					
P	LTR	DESCRIPTION	DATE	DWN	APVD
	I	INITIAL DRAWING	24MAY2019	JMS	GK
	A	INITIAL RELEASE	04DEC2019	CN	GK
	A1	REVISED PER ECN-23-240510	21NOV2023	SR	MS

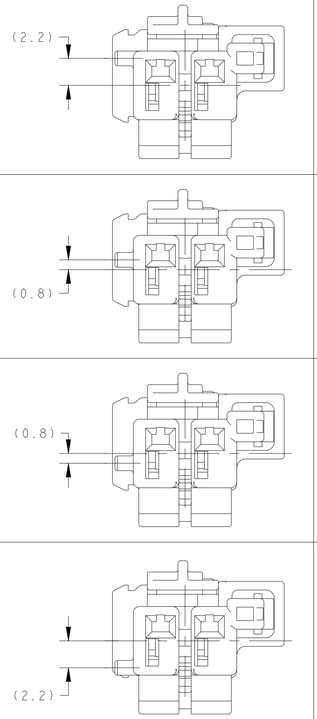

MATING FACE VIEW	CODE
A	
B	
C	
D	

KEYING OPTIONS

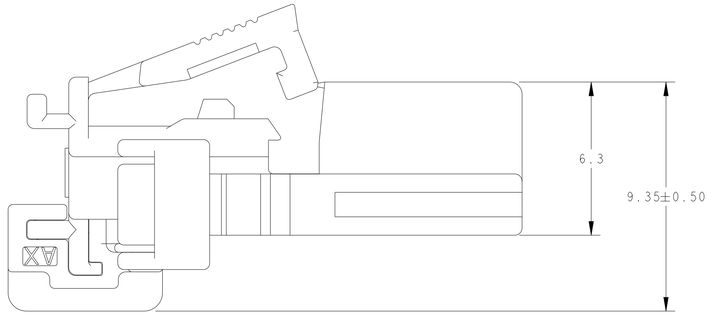

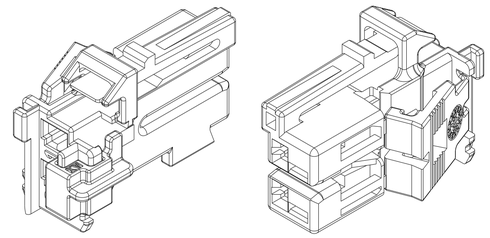

ISOMETRIC VIEWS
SCALE 4:1

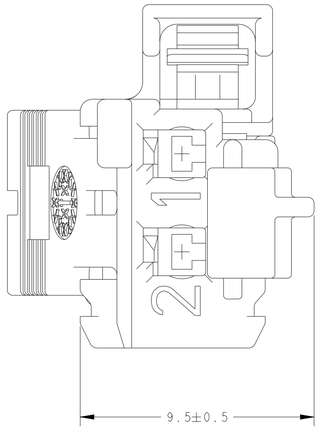

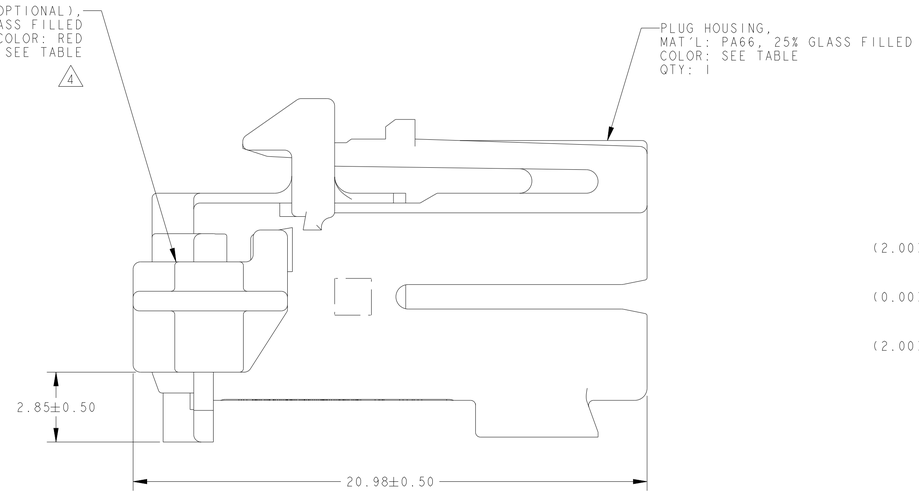

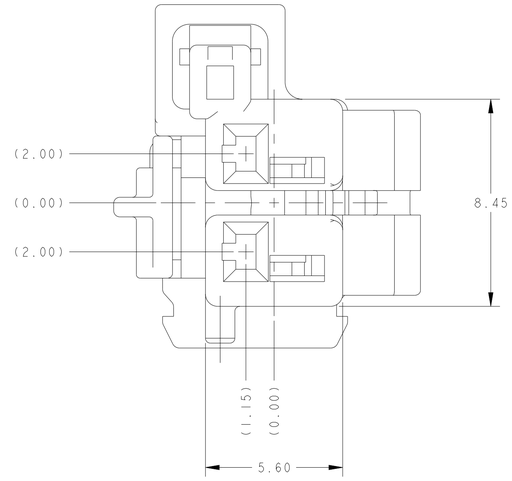

1. 2356394-1 SHOWN IN GENERAL VIEWS.
2. PLUG ASSEMBLY WILL ACCEPT THE FOLLOWING TERMINAL PART NUMBERS: 1670144-1 (TIN PLATED) 0.50-0.75mm²
3. ASSEMBLY IS SHIPPED WITH SECONDARY LOCK IN THE PRE-LOCK POSITION AS SHOWN, SECONDARY LOCK MAY CLOSE INADVERTENTLY DURING SHIPPING IF THIS OCCURS, RELOCATE SECONDARY LOCK TO THE OPEN POSITION PRIOR TO INSERTION OF TERMINALS.

4 CPA SHOWN IN PRE-STAGED, AS SHIPPED, POSITION.

5 WIRE DRESS COVER IS NOT PART OF ASSEMBLY. IT IS SOLD AS A SEPARATE SALEABLE ITEM AS PART NUMBER 2203698-1.

6 MATING COMPONENTS, REFER TO BOM TABLE BELOW.

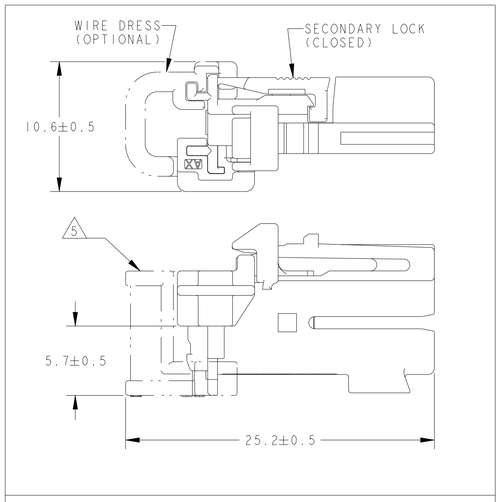

CPA AND SECONDARY LOCK IN CLOSED POSITION
WITH OPTONAL WIRE DRESS (P/N 2203698-1)
SCALE 4:1

MATING COMPONENT 2P CAP HSG	HOUSING COLOR	CPA QTY	KEYING OPTION	PART NUMBER
-	GRAY	NA	D	2356394-8
-	GREEN	NA	C	2356394-7
-	BLUE	NA	B	2356394-6
-	NATURAL (BROWN)	NA	A	2356394-5
2340311-4	GRAY	1	D	2356394-4
2340311-3	GREEN	1	C	2356394-3
2340311-2	BLUE	1	B	2356394-2
2340311-1	NATURAL (BROWN)	1	A	2356394-1

THIS DRAWING IS A CONTROLLED DOCUMENT.

DIMENSIONS: mm

TOLERANCES UNLESS OTHERWISE SPECIFIED:
0 PLC ±-
1 PLC ±0.3
2 PLC ±0.15
3 PLC ±-
4 PLC ±-
ANGLES ±1°

MATERIAL: SEE CALLOUT
FINISH: -

DWN J.SHIRK 24MAY2019
CHK G.KITAZAWA 24MAY2019
APVD G.KITAZAWA 24MAY2019
PRODUCT SPEC -
APPLICATION SPEC 408-32152
WEIGHT -

TE Connectivity

NAME: PLUG ASSEMBLY 2 POSN, 1.2mm MCON

SIZE	CAGE CODE	DRAWING NO	RESTRICTED TO
A1	-	C-2356394	

RESTRICTED CUSTOMER

SCALE 8:1 SHEET 1 OF 1 REV A1

4805 (3/13)