THIS DRAWING IS UNPUBLISHED. RELEASED FOR PUBLICATION 2017
© COPYRIGHT 2017 BY -TE CONNECTIVITY ALL RIGHTS RESERVED.

3 SEAL TYPE	CONTACT SIZE	MIN. INSUL. OD [mm]	MAX. INSUL. OD [mm]	WIRE RANGE [mm²] REF ONLY
NORMAL	16	.100 [2.540]	.134 [3.404]	14-20 AWG [2.0-.50]
E	16	.053 [1.346]	.120 [3.048]	14-20 AWG [2.0-.50]

REVISIONS

P	LTR	DESCRIPTION	DATE	DWN	APVD
	C	REVISED PER PCN E-17-009663	08JUN2017	CM	DM

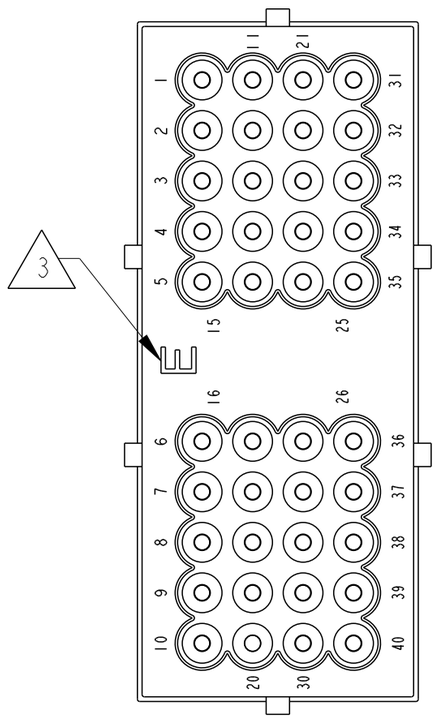

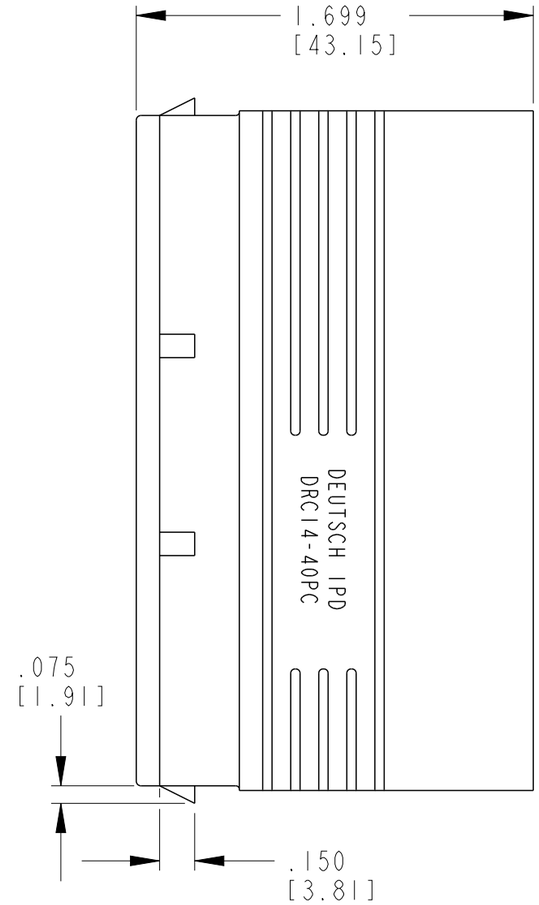

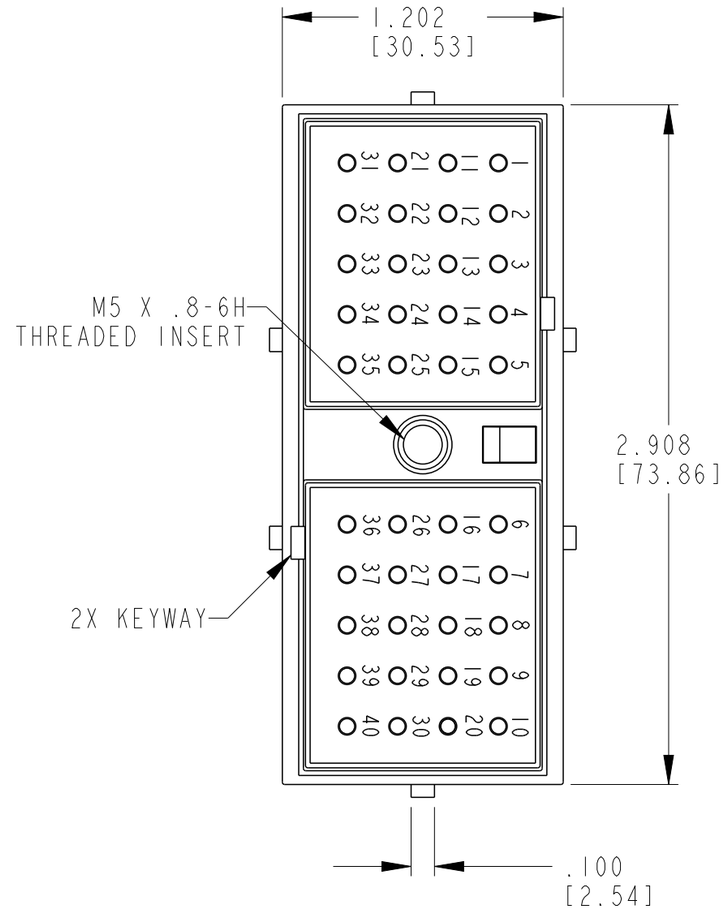

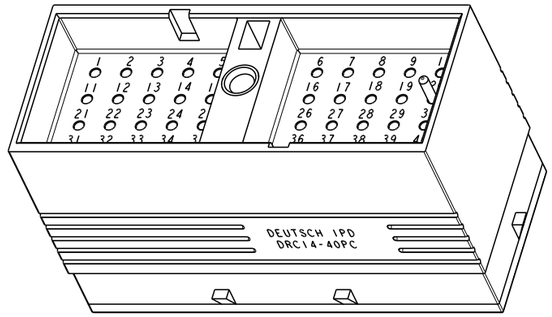

5. FOR CONTACT AND WIRE PERFORMANCE AND APPLICATION CHARACTERISTICS, SEE DRAWING 0425-015-0000.

4. MATERIAL: HOUSING: PLASTIC; GROMMET: RUBBER; INSERT: STEEL.

3. WHEN X = E: MARK LETTER "E" IDENTIFIES "E" WIRE SEAL.
WHEN X = BLANK: IDENTIFIES "NORMAL" WIRE SEAL

2. THIS RECEPTACLE MATES WITH DRC16-40S-XXXX; DRC18-40SC-XXXX PLUGS. (XXXX= ALL MODIFICATIONS) CONSULT FACTORY FOR MODS.

1. RECEPTACLE IS SUPPLIED WITH DUST CAP (NOT SHOWN).

NOTES:

TE INTERNAL PN	DEUTSCH PN
DRC14-40PC	DRC14-40PC
DRC14-40PCE	DRC14-40PCE

THIS DRAWING IS A CONTROLLED DOCUMENT.

DIMENSIONS: INCHES [mm]

TOLERANCES UNLESS OTHERWISE SPECIFIED:
0 PLC ±
1 PLC ±
2 PLC ±
3 PLC ±.025 [.635]
4 PLC ±
ANGLES ±0°30'0"

MATERIAL 4

FINISH

DWN J.APOSTOL 29OCT2012
CHK D.HASIBUAN 05NOV2012
APVD D.MEYER 06NOV2012
PRODUCT SPEC -
APPLICATION SPEC -
WEIGHT -

TE Connectivity

NAME RECEPTACLE, INLINE 40 SIZE 16
DRC SERIES KEY ARRANGEMENT -C-
-

SIZE	CAGE CODE	DRAWING NO	RESTRICTED TO
A3	4AFU8	C-DRC14-40PCX	-

CUSTOMER DRAWING | SCALE 1.5:1 | SHEET 1 OF 1 | REV C

1470-19 (3/13)