Jul.1.2024 Copyright 2024 HIROSE ELECTRIC CO., LTD. All Rights Reserved.
In case of consideration for using Automotive equipment / device which demand high reliability, kindly contact our sales window correspondents.

	COUNT	DESCRIPTION OF REVISIONS	BY	CHKD	DATE		COUNT	DESCRIPTION OF REVISIONS	BY	CHKD	DATE
△					. .	△					. .
△					. .	△					. .
△					. .	△					. .

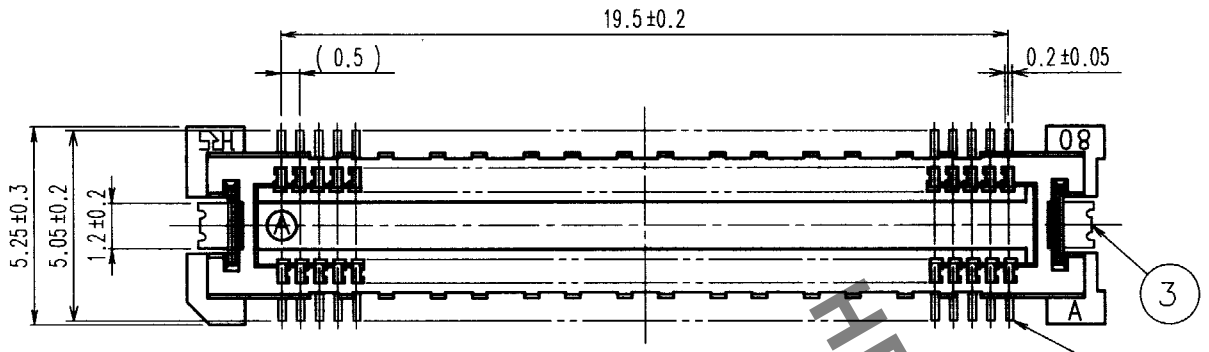

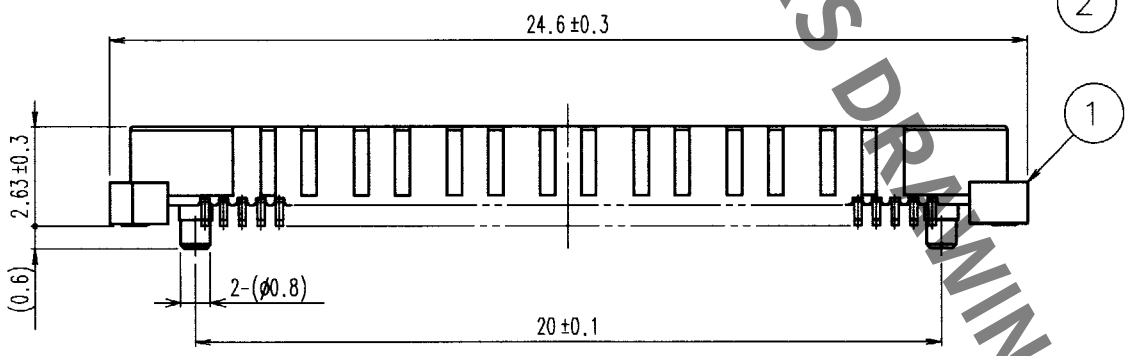

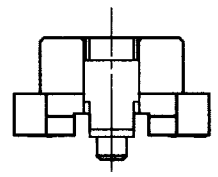

RECOMMENDED LAND PATTERN DIMENSION OF PCB

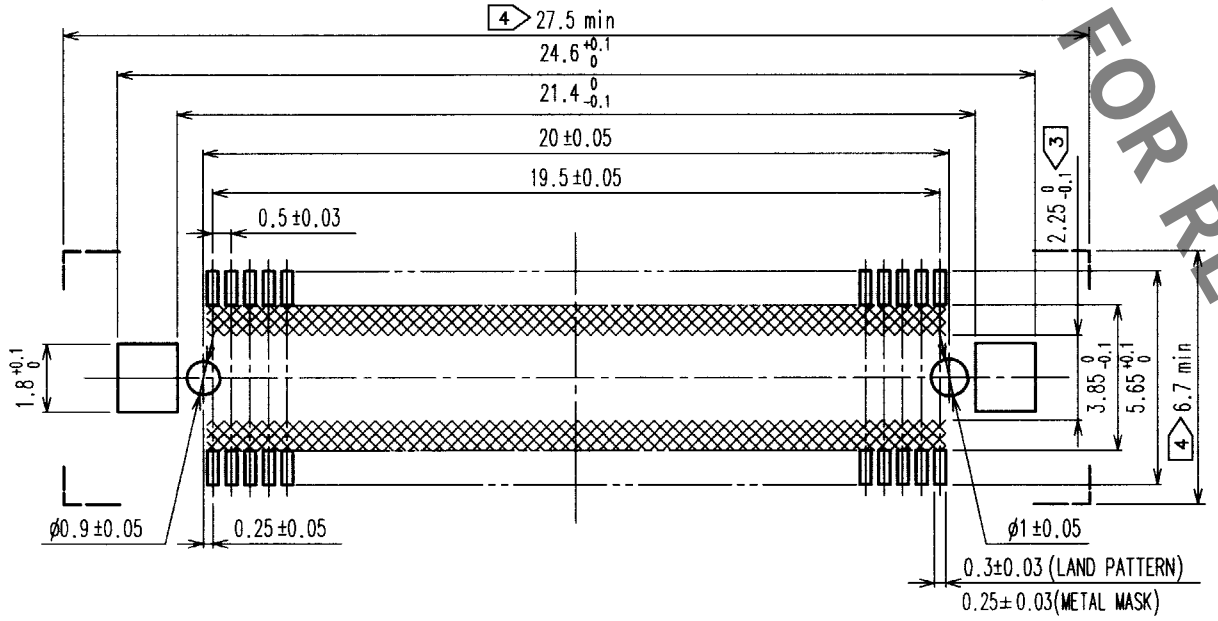

SIGNAL PORTION CROSS SECTION (10:1)

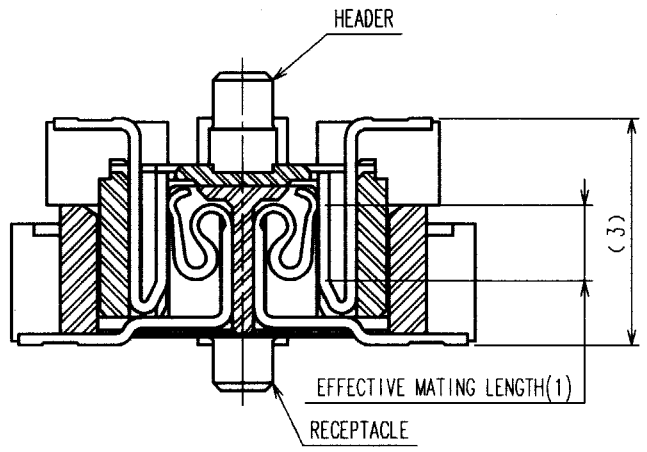

NOTES
1. SMT LEAD-COPLANARITY:0.1 MAX.
2. THIS PRODUCT HAS NO POLARITY TO PATTERN FOR MOUNTING.
3. MAKE SURE WIDTH OF PATTERN IS WITHIN THAT OF LAND ,OR LEAD MAY TOUCH PATTERN.(THIS APPLIES TO HATCHED ▨ AREA.)
4. DO NOT MOUNT OTHER DEVICES ONTO [ ] AREA ,OR MATING PAIR CANNOT BE MATED.
5. TO BE EMBOSSED CARRIER TAPED AS SPECIFIED IN SHEET 2.

NO.	MATERIAL	FINISH, REMARKS	NO.	MATERIAL	FINISH, REMARKS
2	COPPER ALLOY	CONTACT AREA:GOLD(0.1μm) OVER NICKEL LEAD:GOLD FLASH OVER NICKEL			
1	LCP	BEIGE UL94V-0	3	PHOSPHOR BRONZE	TIN PLATED

CODE NO.(OLD)	DRAWN	DESIGNED	CHECKED	APPROVED	RELEASED
CL	N.Nakamura '02.08.07	N.Nakamura '02.08.07	H.Okawa '02.08.07	J.Yoshimura '02.08.07	

SCALE 5 : 1 UNITS mm	DRAWING NO. EDC3-152626-02 HRS HIROSE ELECTRIC CO.,LTD.	PART NO. FX11A-80P-SV0.5(22) CODE NO. CL573-0648-5-22 1/2

TO
PCK

HRS DRAWING FOR REFERENCE

Jul.1.2024 Copyright 2024 HIROSE ELECTRIC CO., LTD. All Rights Reserved.
In case of consideration for using Automotive equipment / device which demand high reliability, kindly contact our sales window correspondents.

	COUNT	DESCRIPTION OF REVISIONS	BY	CHKD	DATE		COUNT	DESCRIPTION OF REVISIONS	BY	CHKD	DATE
△					. .	△					. .
△					. .	△					. .
△					. .	△					. .

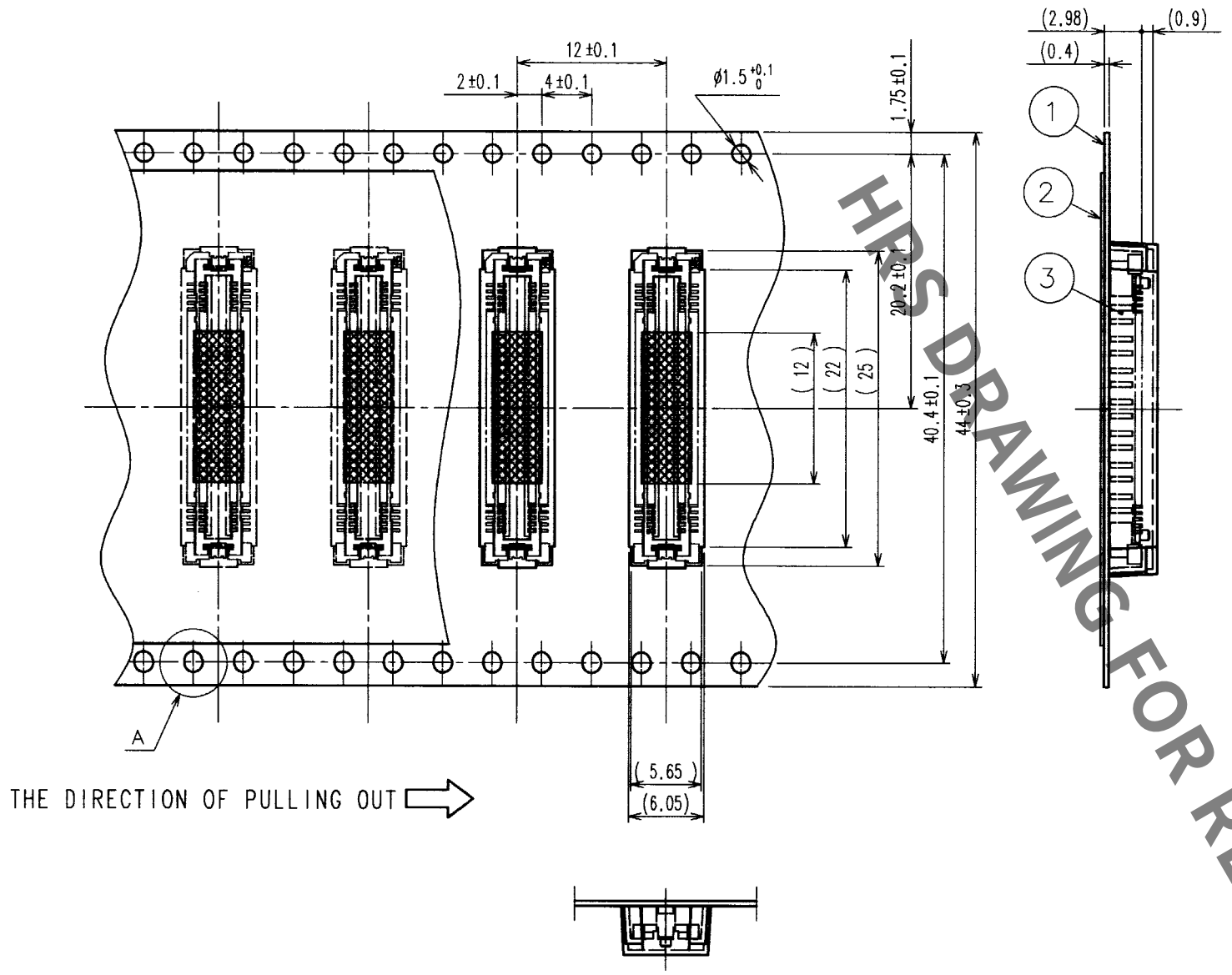

REELED DIMENSION(FREE)

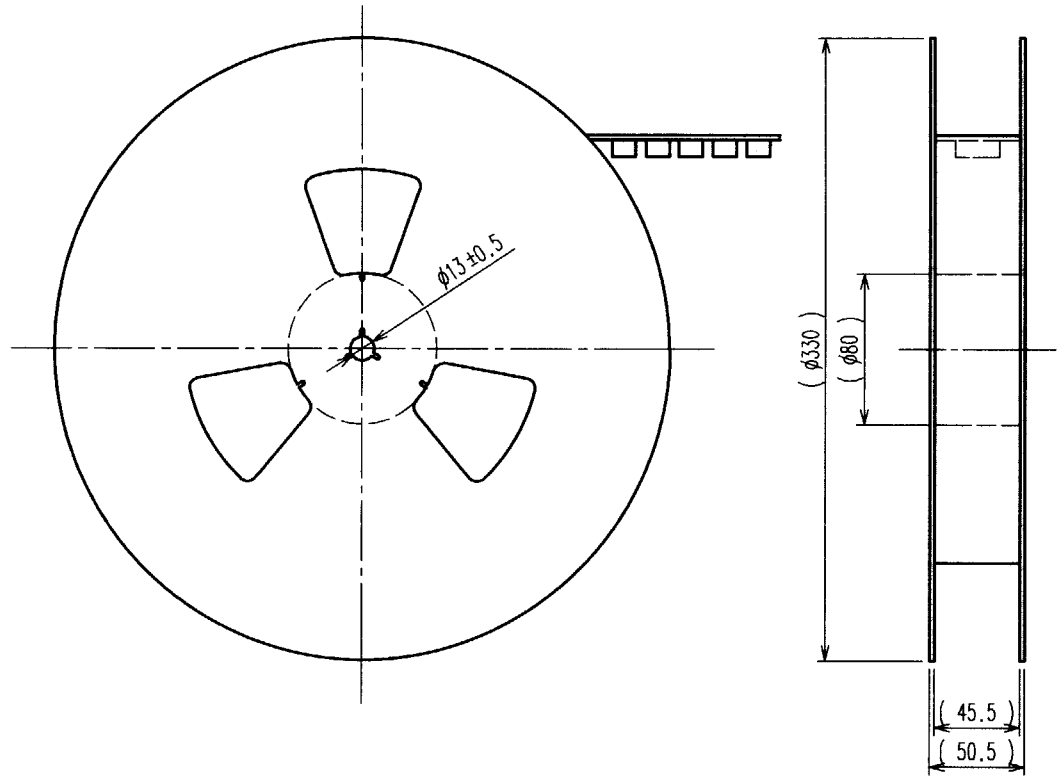

A(5:1)

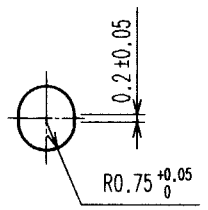

DETAIL FOR VACUUM PICKUP(5:1)

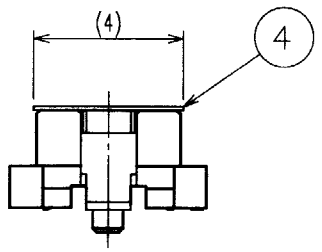

NOTES 1 1REEL:1000 CONNECTORS.
2 MINIMUM 10 COMPARTMENTS FROM BOTH REEL ENDS REMAIN EMPTY.
3 THIS PRODUCT HAS NO POLARITY TO TAPE AND REEL PACKAGING.

HRS DRAWING FOR REFERENCE

NO.	MATERIAL	FINISH, REMARKS	NO.	MATERIAL	FINISH, REMARKS
2	PET	TOP COVER TAPE	4	POLYIMIDE	(TAPE FOR VACUUM PICKUP)
1	PS	EMBOSSED CARRIER TAPE	3	(CONNECTOR)	

CODE NO.(OLD)	DRAWN	DESIGNED	CHECKED	APPROVED	RELEASED
CL	H.Tokunaga 02.08.07	H.Tokunaga 02.08.07	H.Okawa 02.08.07	J.Jashimura 02.08.07	. .
DRAWING FOR PACKING					

SCALE 2 : 1	DRAWING NO. EDC3-152626-02	PART NO. FX11A-80P-SV0.5(22)
UNITS mm	HRS HIROSE ELECTRIC CO., LTD	CODE NO. CL573-0648-5-22 2/

TO
PCK

FORM NO.229