Jun.1.2024 Copyright 2024 HIROSE ELECTRIC CO., LTD. All Rights Reserved.
In case of consideration for using Automotive equipment / device which demand high reliability, kindly contact our sales window correspondents.

| | COUNT | DESCRIPTION OF REVISIONS | BY | CHKD | DATE | | COUNT | DESCRIPTION OF REVISIONS | BY | CHKD | DATE |
|---|---|---|---|---|---|---|---|---|---|---|---|
| △ | | | | | . . | △ | | | | | . . |
| △ | | | | | . . | △ | | | | | . . |
| △ | | | | | . . | △ | | | | | . . |

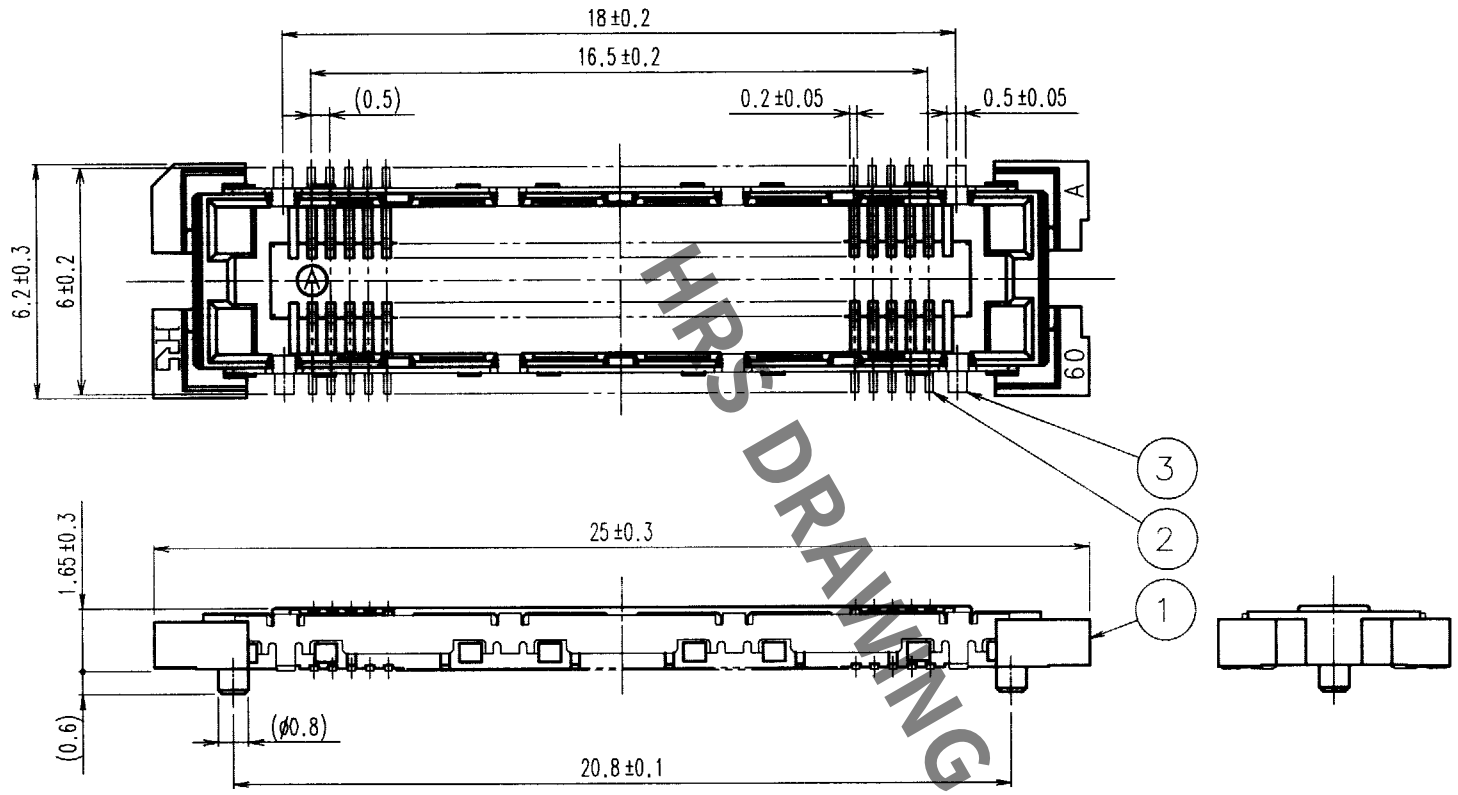


RECOMMENDED LAND PATTERN DIMENSION OF PCB

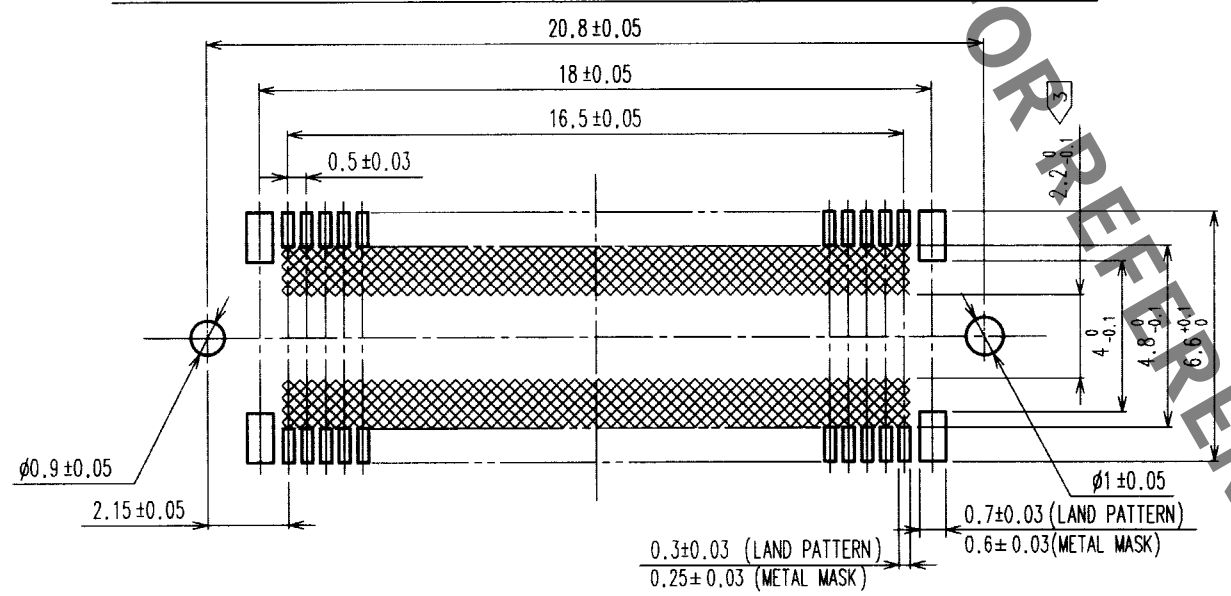


HRS DRAWING FOR REFERENCE

| NO. | MATERIAL | FINISH, REMARKS | NO. | MATERIAL | FINISH, REMARKS |
|---|---|---|---|---|---|
| 2 | PHOSPHOR BRONZE | CONTACT AREA:GOLD(0.1μm) OVER NICKEL<br>LEAD:GOLD FLASH OVER NICKEL | | | |
| 1 | LCP | BEIGE UL94V-0 | 3 | PHOSPHOR BRONZE | TIN PLATED |

NOTES
1. SMT LEAD-COPLANARITY:0.1 MAX.
2. THIS PRODUCT HAS NO POLARITY TO PATTERN FOR MOUNTING.
3. MAKE SURE WIDTH OF PATTERN IS WITHIN THAT OF LAND ,OR LEAD MAY TOUCH PATTERN. (THIS APPLIES TO HATCHED ▩ AREA.)

| CODE NO. (OLD) | DRAWN | DESIGNED | CHECKED | APPROVED | RELEASED |
|---|---|---|---|---|---|
| CL | J.Matsukawa 99.2.12 | J.Matsukawa 99.2.12 | Z.Yoshimura 99.2.12 | Z.Yoshimura 99.2.12 | |

| | | |
|---|---|---|
| SCALE 5 : 1 | DRAWING NO. EDC3-152116 | PART NO. FX11LA-68S-SV |
| UNITS mm | HRS HIROSE ELECTRIC CO.,LTD. | CODE NO. CL573-0142-6 1/1 |

TO PCK

FORM NO.229