SAMZO | REAC/ROHS

REV	ECN NO	DESRIPTION	DESIGN	APPROVAL	DATE
A1	NEW	Replace frame			2018.06.12

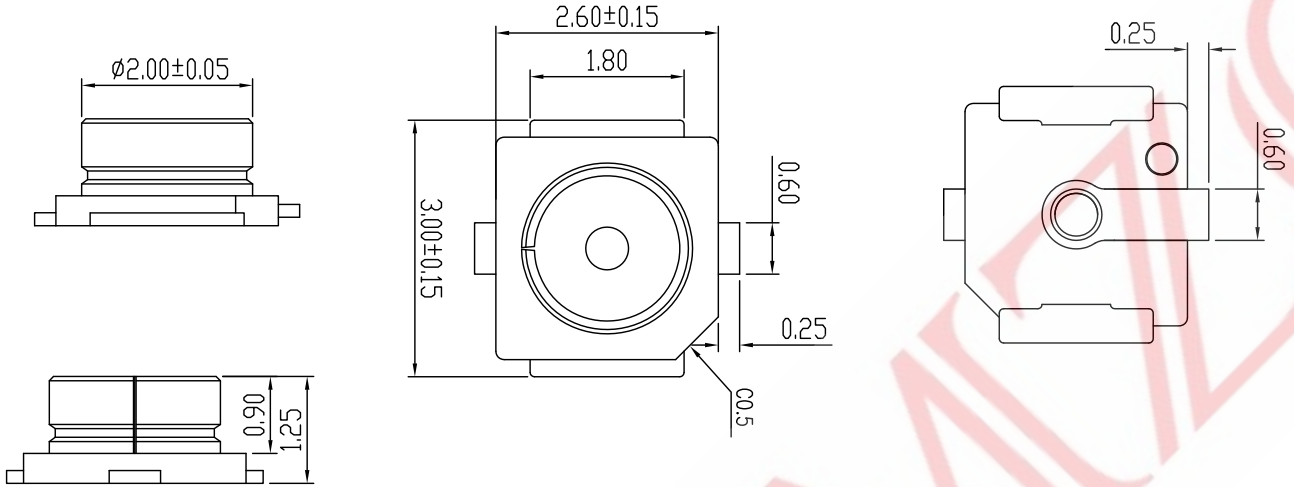

NOTES(备注) :

1.0. RATING(额定值) :

1.1. VOITAGE(电压) :60 VAC (R.M.S.)

1.2. NOMINAL CHARACTERISTIC IMPEDANCE(特性阻抗) : 50 Ohm

1.3. APPLICABLE FREQUENCY (适用频率) : DC ~ 6GHz

1.4. VSWR(电压驻波比) : 1.3 MAX. (DC~3GHz), 1.5 MAX. (3~6GHz)

1.5. TEMPERATURE(适用温度) :-40° C TO +85° C

1.6. APPLIED TO IR SOLDERING PROCESS(适用回流焊接方式)

2.0. MATERIAL SEE BILL OF MATERIAL (材料清单) :

2.1.HOUSING (塑胶) : THERMOPLASTIC LCP,UL94V-0(LCP符合UL94V-0) ,

2.2.CENTER CONTACT(中心端子) : COPPER ALLOY C5191(铜合金C5191).

2.3.SHELL CONTACT (外壳) : COPPER ALLOY C5191(铜合金C5191) .

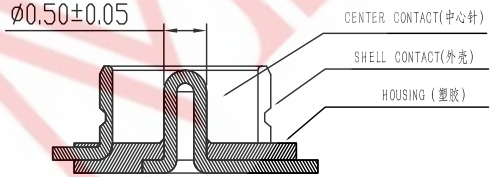

IPEX-1-20-*-J-00

- Mold code编码:00模具编码
- Surface treatment镀层:镀金
- Plastic color塑胶颜色:B-黑色/W-白色/N-本色
- Interface diameter口径:Φ2.0
- Product number编号:1代
- Product series系列:IPEX天线座

CENTER CONTACT

GROUND CONTACT

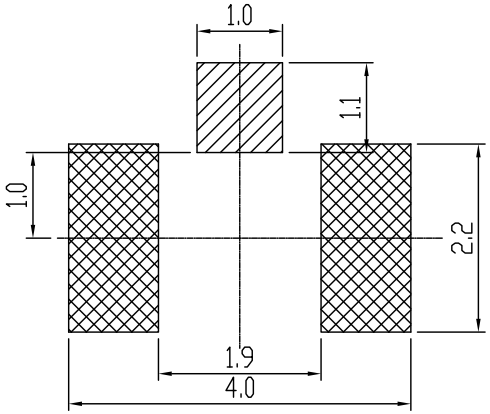

RECOMMENDED PCB LAYOUT

(TOLERANCE:±0.05)

ITEM	DESCRIPTION	MATERIAL	QTY	FINSH/COLOR
A	塑胶	LCP	1	------
B	端子	C5195	1	镀金
A	外壳	C5195	1	镀金

DESIGN	WANGGUIFA	2018.06.12
CHECKED	ZHENGUILAN	2018.06.12
APPROVED	LILIANJIANG	2018.06.14

GENERAL TOLERANCE	
⩾0~2<	±0.15
⩾2~5<	±0.25
⩾0~2<	±0.15
⩾5	±0.35

FIRST VIEW

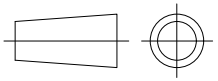

SCALE	1:1	UNIT	mm

The copyright belongs to samzo parts [China] Co., Ltd. please use the material after samzo parts agree to authorize. The final right of interpretation belongs to samzo parts.
WWW.KKK-JP.COM

SAMZO COMPONENTS

Electronic switch and connector manufacturer

TITLE:: IPEX-1代 SMT Φ2.0 H1.25

DWG NO: IPEX-1-P001

PART NO: IPEX-1-1605001

MODEL NO: IPEX-1-20-*-J-00

NAME: IPEX 1P