REV	ECN NO	DESRIPTION	DESIGN	APPROVAL	DATE
A1	NEW	Replace frame			2020.06.12

ROHS

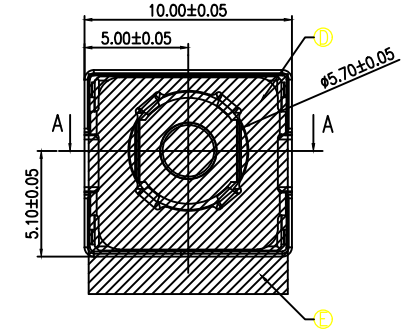

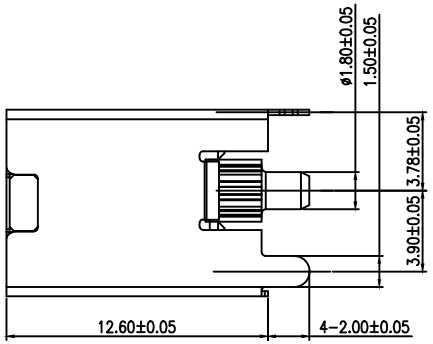

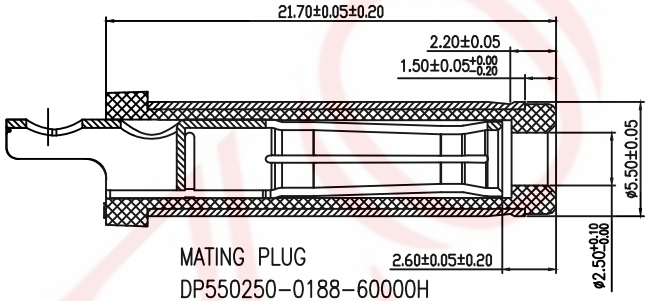

MATING PLUG
DP550250-0188-60000H

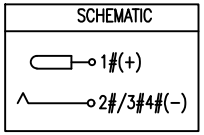

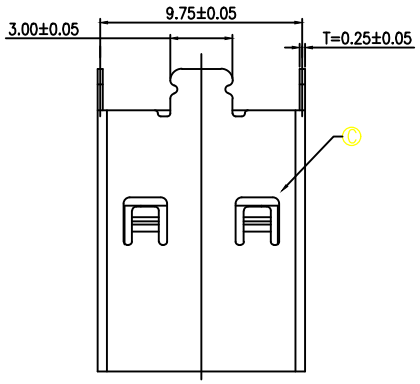

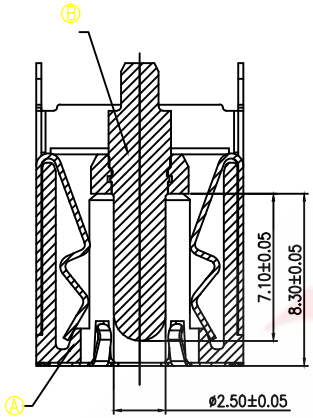

SECTION A-A

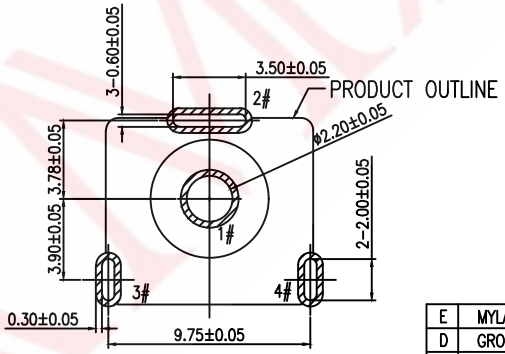

RECOMMENDED PCB LAYOUT
TOP VIEW TOLERANCE:±0.05

SPECIFICATION:

1. RATING: DC 20V 20A
2. CONTACT RESISTANCE:
   30mΩ MAX.(INITIAL)
   50mΩ MAX.(FINAL)
3. INSULATION RESISTANCE: 100 MΩ MIN.
4. WITHSTAND VOLTAGE: 500 VAC
5. INSERTION FORCE: 3N~30N
6. EXTRACTION FORCE: 3N~30N
7. DURABILITY: 5,000 CYCLES

9C L 4 126 B E G A

- A — Model Definition
- G — Mould Number: MX1075
- E — Needle Diameter: 2.5mm
- B — Fixing Method: Without Fixed Column
- 126 — Interface Method: Conventional Flared Opening
- 4 — Overall Length: 12.60 mm
- L — Pin Position: 4 Pins
- 9C — Mounting Method: Vertical (DIP)
- Product Series: DC Power Jacks

NO.	DESCRIPTION	MATERIAL	REMARKS	QTY
E	MYLAR	—	—	1
D	GROUND	SUS 304	—	1
C	SHELL	COPPER ALLOY	Ni 40u"MIN.	1
B	CENTER PIN	BRASS	GOLD FLASH/Ni 40u" MIN.	1
A	HOUSING	HIGH TEMP.THERMOPLASTIC	BLACK	1

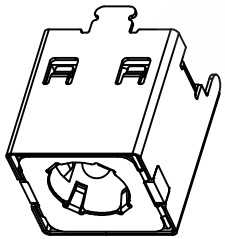

3D VIEW

			GENERAL TOLERANCE	
			≥0~2<	±0.15
DESIGN	WANGGUIFA	2018.06.12	≥2~5<	±0.25
CHECKED	ZHENGUILAN	2018.06.12	≥0~2<	±0.15
APPROVED	LILIANJIANG	2018.06.14	≥5	±0.35

FIRST VIEW

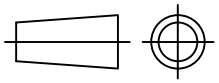

SCALE	1:1	UNIT	mm

The copyright belongs to samzo parts [China] Co., Ltd. please use the material after samzo parts agree to authorize. The final right of interpretation belongs to samzo parts.
WWW.KKK-JP.COM

SAMZO COMPONENTS
Electronic switch and connector manufacturer

TITLE:: 20A大电流 立式插件
DWG NO: 9CL4126-A1075
PART NO: 9CL4-55251075
MODEL NO: 9CL4126BEGA
NAME: DC JACK