REV	ECN NO	DESRIPTION	DESIGN	APPROVAL	DATE
A1	NEW	Replace frame			2020.06.12

ROHS

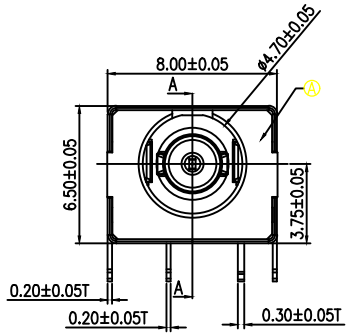

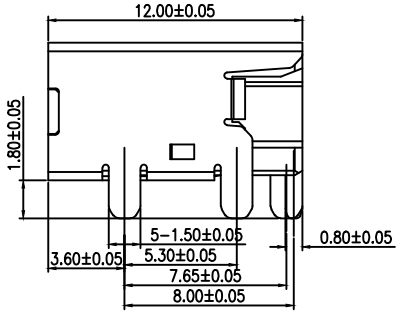

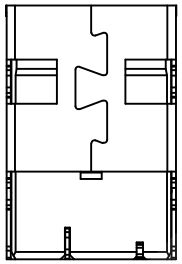

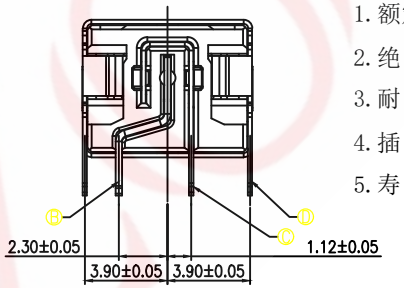

主要技术性能

1. 额定电负荷： 20V 5A;
2. 绝 缘 电 阻：≥100MΩ;
3. 耐 压：AC500V(50Hz)/min;
4. 插 拔 力：3～25N;
5. 寿 命：5,000次。

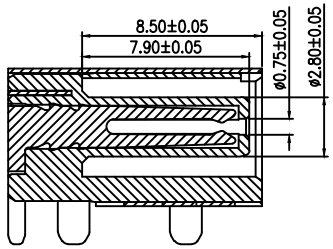

SECTION A-A

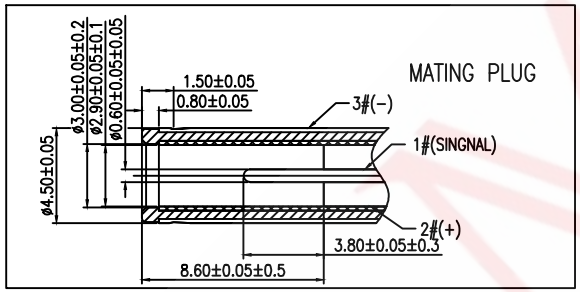

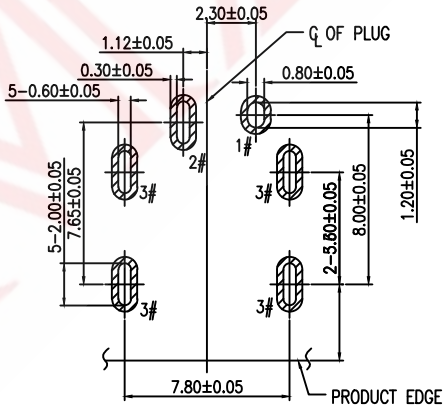

RECOMMENDED PCB LAYOUT
TOP VIEW TOLERANCE:±0.05

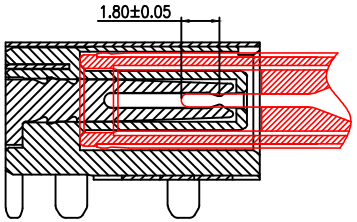

SCHEMATIC

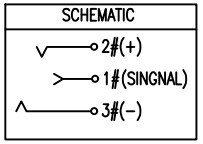

9C W 6 120 B E K A

- Model Definition
- Mould Number: MX0355
- Needle Diameter: Core 5.0 mm, Inner Hole 0.6 mm
- Fixing Method: Without Fixed Column
- Interface Method: Conventional Flared Opening
- Overall Length: 12.00 mm
- Pin Position: 6 Pin
- Mounting Method: Horizontal (DIP)
- Product Series: DC Power Jacks

序号	名 称	数量	材 料	备 注
4	圆针	1	黄 铜	镀银
3	插片	1	黄 铜	镀银
2	弹片	1	磷 铜	镀银
1	基座	1	PA9T(黑色)	

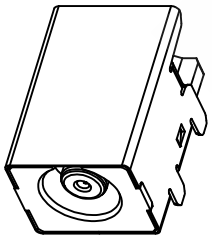

3D VIEW

			GENERAL TOLERANCE	
			≥0~2<	±0.15
DESIGN	WANGGUIFA	2018.06.12	≥2~5<	±0.25
CHECKED	ZHENGUILAN	2018.06.12	≥0~2<	±0.15
APPROVED	LILIANJIANG	2018.06.14	≥5	±0.35

FIRST VIEW

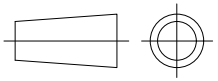

SCALE	1:1	UNIT	mm

The copyright belongs to samzo parts [China] Co., Ltd. please use the material after samzo parts agree to authorize. The final right of interpretation belongs to samzo parts.
WWW.KKK-JP.COM

SAMZO COMPONENTS
Electronic switch and connector manufacturer

TITLE:: 大电流 卧式板上 6PIN
DWG NO: 9CW6120-A0355
PART NO: 9CW6-45060355
MODEL NO: 9CW6120BEKA
NAME: DC JACK