## M12 4 POL AC FEMALE

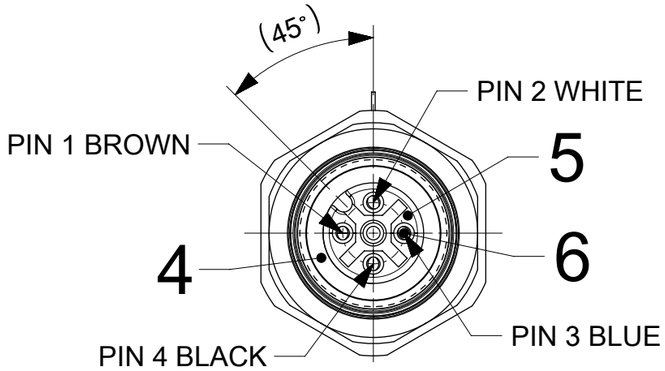


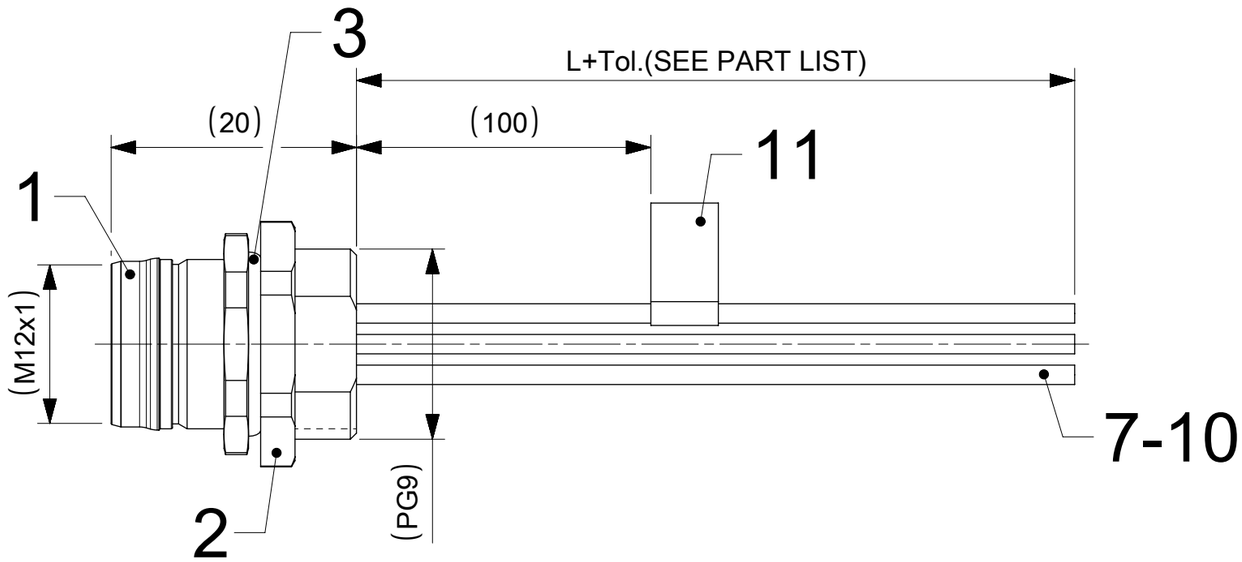


## M12 5 POL AC FEMALE

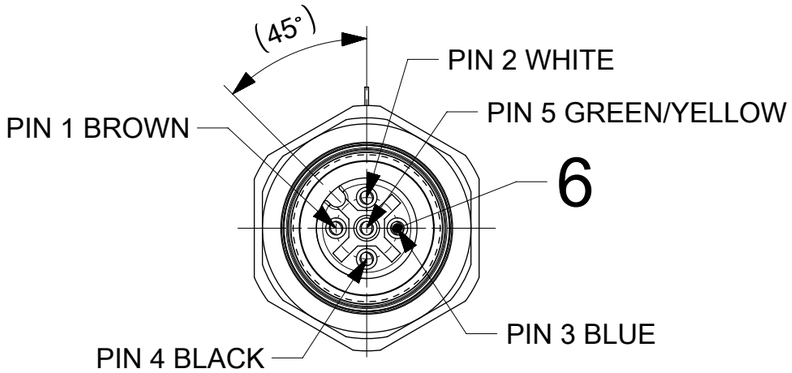


## M12 8 POL AC FEMALE

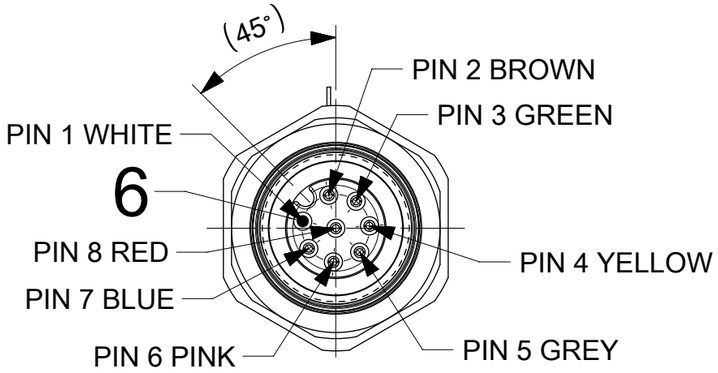


## M12 12 POL AC FEMALE

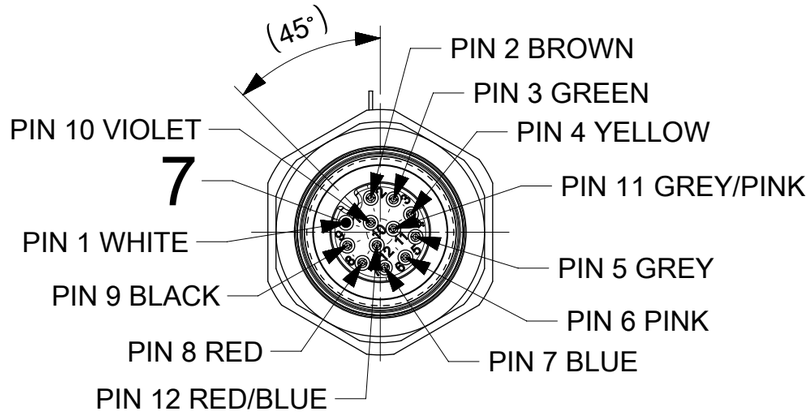


## M12 4 POL DC FEMALE

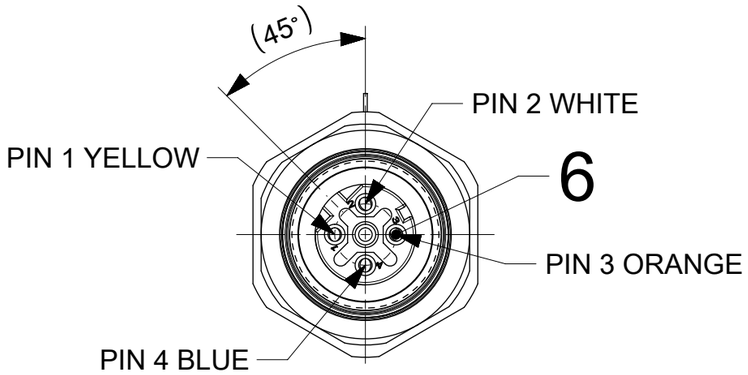


| | | | |
|---|---|---|---|
| DOCUMENT STATUS | P1 | RELEASE DATE | 2023/01/31 08:21:37 |

FORMAT: tb-psd-A3
REVISION: J
DATE: 2020/01/14

FUNCTIONAL SYMBOLS: FA = 0, FC = 0, FP = 0
DIVISIONAL SYMBOLS

THIS DRAWING CONTAINS INFORMATION THAT IS PROPRIETARY TO MOLEX ELECTRONIC TECHNOLOGIES, LLC AND SHOULD NOT BE USED WITHOUT WRITTEN PERMISSION

| DIMENSION UNITS | SCALE |
|---|---|
| mm | 2:1 |

GENERAL TOLERANCES (UNLESS SPECIFIED)

| | | |
|---|---|---|
| ANGULAR TOL | ± | 1.0 ° |
| 4 PLACES | ± | |
| 3 PLACES | ± | |
| 2 PLACES | ± | 0.05 |
| 1 PLACE | ± | 0.3 |
| 0 PLACES | ± | 0.5 |

DRAFT WHERE APPLICABLE MUST REMAIN WITHIN DIMENSIONS

CURRENT REV DESC: CHANGED MIN. TEMP. IN TABLE

EC NO: 736602
DRWN: RSCHIEBER 2023/01/30
CHK'D: RSILLER 2023/01/31
APPR: RSILLER 2023/01/31

INITIAL REVISION:
DRWN: FDAFERNER 2021/02/16
APPR: RSILLER 2022/07/13

THIRD ANGLE PROJECTION | DRAWING: A3-SIZE | SERIES: 120404

molex

REC U12 XP XC FE PG9 FM WIR BRASS NI XM

PRODUCT CUSTOMER DRAWING

| DOCUMENT NUMBER | DOC TYPE | DOC PART | REVISION |
|---|---|---|---|
| 1204040011 | PSD | 000 | A1 |

| MATERIAL NUMBER | CUSTOMER | SHEET NUMBER |
|---|---|---|
| SEE PART LIST | GENERAL MARKET | 1 OF 3 |

TABLE 1 - 4P A-CODE

| ITEM | QTY | DESCRIPTION | MATERIAL | FINISH/COLOR |
|---|---|---|---|---|
| 1 | 1 | SHELL PG9 FE BRASS FM L20 NI REC U12 | BRASS | Ni |
| 2 | 1 | NUT PG9 BRASS NI HEX | | |
| 3 | 1 | GASKET OR NBR 11X2 BK | NBR | BLACK |
| 4 | 1 | GASKET OR FPM 7.1X1.35 RD 60 | FPM | RED |
| 5 | 1 | INSERT M12 FE 4P AC TPU BK UNSH | TPU | BLACK |
| 6 | 4 | CONTACT 10 FE STA AU CR WRA 0.14-0.50 | BRASS | Au |
| 7 | 1 | WIRE;22AWG;BU;1.58;PVC;17x0.16;UL1569 | PVC | BLUE |
| 8 | 1 | WIRE;22AWG;BN;1.58;PVC;17x0.16;UL1569 | | BROWN |
| 9 | 1 | WIRE;22AWG;BK;1.58;PVC;17x0.16;UL1569 | | BLACK |
| 10 | 1 | WIRE;22AWG;WH;1.58;PVC;17x0.16;UL1569 | | WHITE |
| 11 | 1 | LABEL;SELF L.YELLOW(2.25X.75IN) | VINYL | YELLOW |
| 12 | - | POTTING MATERIAL | - | - |

TABLE 2 - 5P A-CODE

| ITEM | QTY | DESCRIPTION | MATERIAL | FINISH/COLOR |
|---|---|---|---|---|
| 1 | 1 | SHELL PG9 FE BRASS FM L20 NI REC U12 | BRASS | Ni |
| 2 | 1 | NUT PG9 BRASS NI HEX | | |
| 3 | 1 | GASKET OR NBR 11X2 BK | NBR | BLACK |
| 4 | 1 | GASKET OR FPM 7.1X1.35 RD 60 | FPM | RED |
| 5 | 1 | INSERT M12 FE 5P AC TPU BK UNSH | TPU | BLACK |
| 6 | 5 | CONTACT 10 FE STA AU CR WRA 0.14-0.50 | BRASS | Au |
| 7 | 1 | WIRE;22AWG;BU;1.58;PVC;17x0.16;UL1569 | PVC | BLUE |
| 8 | 1 | WIRE;22AWG;BN;1.58;PVC;17x0.16;UL1569 | | BROWN |
| 9 | 1 | WIRE;22AWG;BK;1.58;PVC;17x0.16;UL1569 | | BLACK |
| 10 | 1 | WIRE;22AWG;WH;1.58;PVC;17x0.16;UL1569 | | WHITE |
| 11 | 1 | WIRE;20AWG;GN/YE;1.76;PVC;26x0.16;UL1569 | | GREEN/YELLOW |
| 12 | 1 | LABEL;SELF L.YELLOW(2.25X.75IN) | VINYL | YELLOW |
| 13 | - | POTTING MATERIAL | - | - |

TABLE 3 - 8P A-CODE

| ITEM | QTY | DESCRIPTION | MATERIAL | FINISH/COLOR |
|---|---|---|---|---|
| 1 | 1 | SHELL PG9 FE BRASS FM L20 NI REC U12 | BRASS | Ni |
| 2 | 1 | NUT PG9 BRASS NI HEX | | |
| 3 | 1 | GASKET OR NBR 11X2 BK | NBR | BLACK |
| 4 | 1 | GASKET OR FPM 7.1X1.35 RD 60 | FPM | RED |
| 5 | 1 | INSERT M12 FE 8P AC REC PUR BK UNSH | PUR | BLACK |
| 6 | 8 | CONTACT 8 FE TUR AU CR SHORT 7/8POLE | BRASS | Au |
| 7 | 1 | WIRE;24AWG;BU;1.43;PVC;11x0.16;UL1569 | PVC | BLUE |
| 8 | 1 | WIRE;24AWG;BN;1.43;PVC;11x0.16;UL1569 | | BROWN |
| 9 | 1 | WIRE;24AWG;YE;1.43;PVC;11x0.16;UL1569 | | YELLOW |
| 10 | 1 | WIRE;24AWG;GN;1.43;PVC;11x0.16;UL1569 | | GREEN |
| 11 | 1 | WIRE;24AWG;GY;1.43;PVC;11x0.16;UL1569 | | GREY |
| 12 | 1 | WIRE;24AWG;PK;1.43;PVC;11x0.16;UL1569 | | PINK |
| 13 | 1 | WIRE;24AWG;RD;1.43;PVC;11x0.16;UL1569 | | RED |
| 14 | 1 | WIRE;24AWG;WH;1.43;PVC;11x0.16;UL1569 | | WHITE |
| 15 | 1 | LABEL;SELF L.YELLOW(2.25X.75IN) | VINYL | YELLOW |
| 16 | - | POTTING MATERIAL | - | - |

TABLE 4 - 12P A-CODE

| ITEM | QTY | DESCRIPTION | MATERIAL | FINISH/COLOR |
|---|---|---|---|---|
| 1 | 1 | SHELL PG9 FE BRASS FM L20 NI REC U12 | BRASS | Ni |
| 2 | 1 | NUT PG9 BRASS NI HEX | | |
| 3 | 1 | GASKET OR NBR 11X2 BK | NBR | BLACK |
| 4 | 1 | GASKET OR FPM 7.1X1.35 RD 60 | FPM | RED |
| 5 | 1 | INSERT M12 FE 12P AC PUR BK SHD | PUR | BLACK |
| 6 | 1 | M12S-FRONT SHELL-FEMALE SHIELD | BRASS | Ni |
| 7 | 12 | M12-Fem-Contact-12pol | | Au |
| 8 | 1 | WIRE;26AWG;BU;1.30;PVC;7x0.16;UL1569 | PVC | BLUE |
| 9 | 1 | WIRE;26AWG;BN;1.30;PVC;7x0.16;UL1569 | | BROWN |
| 10 | 1 | WIRE;26AWG;YE;1.30;PVC;7x0.16;UL1569 | | YELLOW |
| 11 | 1 | WIRE;26AWG;GN;1.30;PVC;7x0.16;UL1569 | | GREEN |
| 12 | 1 | WIRE;26AWG;GY;1.30;PVC;7x0.16;UL1569 | | GREY |
| 13 | 1 | WIRE;26AWG;PK;1.30;PVC;7x0.16;UL1569 | | PINK |
| 14 | 1 | WIRE;26AWG;RD;1.30;PVC;7x0.16;UL1569 | | RED |
| 15 | 1 | WIRE;26AWG;BK;1.30;PVC;7x0.16;UL1569 | | BLACK |
| 16 | 1 | WIRE;26AWG;VT;1.30;PVC;7x0.16;UL1569 | | VIOLET |
| 17 | 1 | WIRE;26AWG;WH;1.30;PVC;7x0.16;UL1569 | | WHITE |
| 18 | 1 | WIRE;26AWG;GY/PK;1.30;PVC;7x0.16;UL1569 | | GREY/PINK |
| 19 | 1 | WIRE;26AWG;RD/BU;1.30;PVC;7x0.16;UL1569 | | RED/BLUE |
| 20 | 1 | LABEL;SELF L.YELLOW(2.25X.75IN) | VINYL | YELLOW |
| 21 | - | POTTING MATERIAL | - | - |

TABLE 5 - 4P D-CODE

| ITEM | QTY | DESCRIPTION | MATERIAL | FINISH/COLOR |
|---|---|---|---|---|
| 1 | 1 | SHELL PG9 FE BRASS FM L20 NI REC U12 | BRASS | Ni |
| 2 | 1 | NUT PG9 BRASS NI HEX | | |
| 3 | 1 | GASKET OR NBR 11X2 BK | NBR | BLACK |
| 4 | 1 | GASKET OR FPM 7.1X1.35 RD 60 | FPM | RED |
| 5 | 1 | INSERT M12 FE 4P DC CSE PUR BK UNSH | PUR | BLACK |
| 6 | 4 | CONTACT 10 FE STA AU CR WRA 0.14-0.50 | BRASS | Au |
| 7 | 1 | WIRE;22AWG;BU;1.58;PVC;17x0.16;UL1569 | PVC | BLUE |
| 8 | 1 | WIRE;22AWG;OG;1.58;PVC;17x0.16;UL1569 | | ORANGE |
| 9 | 1 | WIRE;22AWG;YE;1.58;PVC;17x0.16;UL1569 | | YELLOW |
| 10 | 1 | WIRE;22AWG;WH;1.58;PVC;17x0.16;UL1569 | | WHITE |
| 11 | 1 | LABEL;SELF L.YELLOW(2.25X.75IN) | VINYL | YELLOW |
| 12 | - | POTTING MATERIAL | - | - |

THIS DRAWING CONTAINS INFORMATION THAT IS PROPRIETARY TO MOLEX ELECTRONIC TECHNOLOGIES, LLC AND SHOULD NOT BE USED WITHOUT WRITTEN PERMISSION

FUNCTIONAL SYMBOLS: F/A = 0, F/C = 0, F/P = 0

DIVISIONAL SYMBOLS

DIMENSION UNITS: mm
SCALE: 1:1

GENERAL TOLERANCES (UNLESS SPECIFIED)

| | | |
|---|---|---|
| ANGULAR TOL | ± | 1.0 ° |
| 4 PLACES | ± | |
| 3 PLACES | ± | |
| 2 PLACES | ± | 0.05 |
| 1 PLACE | ± | 0.3 |
| 0 PLACES | ± | 0.5 |

DRAFT WHERE APPLICABLE MUST REMAIN WITHIN DIMENSIONS

CURRENT REV DESC: CHANGED MIN. TEMP. IN TABLE

EC NO: 736602
DRWN: RSCHIEBER 2023/01/30
CHK'D: RSILLER 2023/01/31
APPR: RSILLER 2023/01/31

INITIAL REVISION:
DRWN: FDAFERNER 2021/02/16
APPR: RSILLER 2022/07/13

THIRD ANGLE PROJECTION

DRAWING: A3-SIZE
SERIES: 120404

molex

REC U12 XP XC FE PG9 FM WIR BRASS NI XM

PRODUCT CUSTOMER DRAWING

| DOCUMENT NUMBER | DOC TYPE | DOC PART | REVISION |
|---|---|---|---|
| 1204040011 | PSD | 000 | A1 |

| MATERIAL NUMBER | CUSTOMER | SHEET NUMBER |
|---|---|---|
| SEE PART LIST | GENERAL MARKET | 2 OF 3 |

| DOCUMENT STATUS | P1 | RELEASE DATE | 2023/01/31 08:21:37 |
|---|---|---|---|

FORMAT: master-shared-A3
REVISION: J
DATE: 2020/01/16

| POLES | 4 POLE | 5 POLE | 8 POLE | 12 POLE | 4 POLE |
|---|---|---|---|---|---|
| LAYOUT | 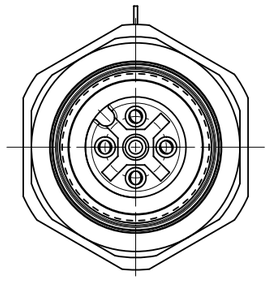 | 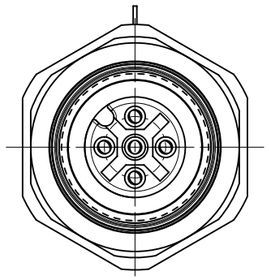 | 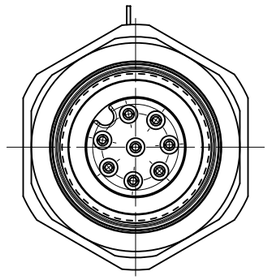 | 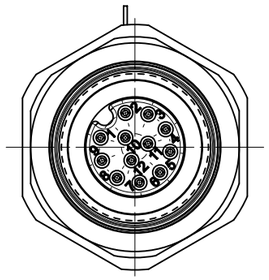 | 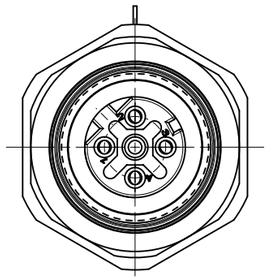 |
| VOLTAGE RATING | 250V | 60V | 30V | 30V | 250V |
| CODING | A - Code | A - Code | A - Code | A - Code | D - Code |
| AMPERE RATING | 4A | 4A | 2A | 1.5A | 4A |
| PROTECTION CLASS CONNECTOR INTERFACE SHELL TO ENCLOSURE | IP 67/69K (in mated condition / when properly installed) | | | | |
| OPERATING TEMP. | -40°C / 85°C | | | | |
| UL CERTIFICATION | FILE NO. E152210 | | | | |
| CSA CERTIFICATION | FILE NO. LR6837 | | | | |
| WIRE LEAD | 0.34 mm² PVC | 0.34 mm² PVC | 0.25 mm² PVC | 0.14 mm² PVC | 0.34 mm² PVC |
| PIN DIAMETER | 1.0 mm | 1.0 mm | 0.8 mm | 0.6 mm | 1.0 mm |
| WIRE COLOR | ACCORDING TO IEC 60947-5-2 | | ACCORDING TO DIN 47100 | | ACC. TO IEC 60947-5-2 |

NOTE:
1. PANEL THICKNESS MAX. 5.5mm

RECOMMENDED PANEL CUTOUT

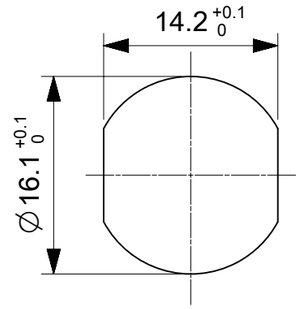


PART LIST 4P AC

| MOLEX P/N | ENGINEERING NUMBER | DESCRIPTION | L [mm] | TOL |
|---|---|---|---|---|
| 1204040011 | YR4J20E03C300 | REC U12 4P AC FE PG9 FM WIR BRASS NI 0.3M | 300 | +40 |
| 1204040036 | YR4J20E03C500 | REC U12 4P AC FE PG9 FM WIR BRASS NI 0.5M | 500 | +40 |

PART LIST 5P AC

| MOLEX P/N | ENGINEERING NUMBER | DESCRIPTION | L [mm] | TOL |
|---|---|---|---|---|
| 1204040012 | YR5J20E03C300 | REC U12 5P AC FE PG9 FM WIR BRASS NI 0.3M | 300 | +40 |
| 1204040037 | YR5J20E03C500 | REC U12 5P AC FE PG9 FM WIR BRASS NI 0.5M | 500 | +40 |

PART LIST 8P AC

| MOLEX P/N | ENGINEERING NUMBER | DESCRIPTION | L [mm] | TOL |
|---|---|---|---|---|
| 1204040013 | YR8J20E02C300 | REC U12 8P AC FE PG9 FM WIR BRASS NI 0.3M | 300 | +40 |
| 1204040038 | YR8J20E02C500 | REC U12 8P AC FE PG9 FM WIR BRASS NI 0.5M | 500 | +40 |

PART LIST 12P AC

| MOLEX P/N | ENGINEERING NUMBER | DESCRIPTION | L [mm] | TOL |
|---|---|---|---|---|
| 1204040014 | YRCJ20E01C300 | REC U12 12P AC FE PG9 FM WIR BRASS NI 0.3M | 300 | +40 |
| 1204040039 | YRCJ20E01C500 | REC U12 12P AC FE PG9 FM WIR BRASS NI 0.5M | 500 | +40 |

PART LIST 4P DC

| MOLEX P/N | ENGINEERING NUMBER | DESCRIPTION | L [mm] | TOL |
|---|---|---|---|---|
| 1204063002 | ERYA2J20E03C300 | REC U12 4P DC FE PG9 FM WIR BRASS NI 0.3M | 300 | +40 |
| 1204063005 | ERYA2J20E03C500 | REC U12 4P DC FE PG9 FM WIR BRASS NI 0.5M | 500 | +40 |

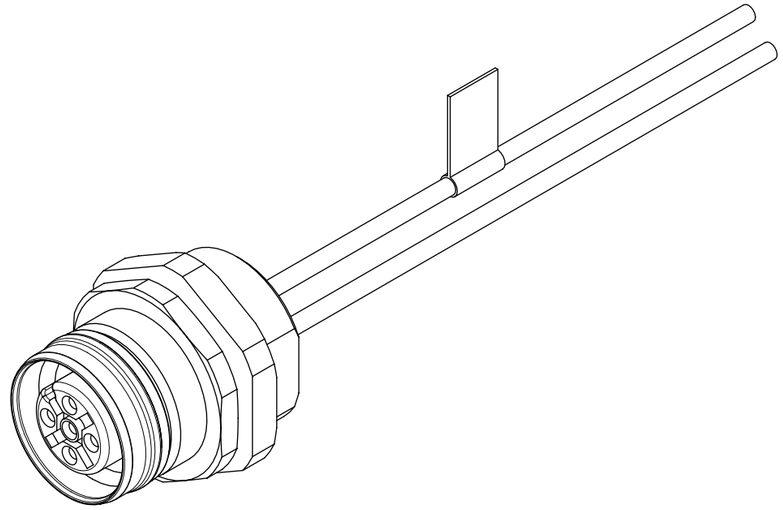

THIS DRAWING CONTAINS INFORMATION THAT IS PROPRIETARY TO MOLEX ELECTRONIC TECHNOLOGIES, LLC AND SHOULD NOT BE USED WITHOUT WRITTEN PERMISSION

FUNCTIONAL SYMBOLS: A = 0, C = 0, P = 0
DIVISIONAL SYMBOLS

| DIMENSION UNITS | SCALE |
|---|---|
| mm | 2:1 |

GENERAL TOLERANCES (UNLESS SPECIFIED)

| | | |
|---|---|---|
| ANGULAR TOL | ± | 1.0 ° |
| 4 PLACES | ± | |
| 3 PLACES | ± | |
| 2 PLACES | ± | 0.05 |
| 1 PLACE | ± | 0.3 |
| 0 PLACES | ± | 0.5 |

DRAFT WHERE APPLICABLE MUST REMAIN WITHIN DIMENSIONS

CURRENT REV DESC: CHANGED MIN. TEMP. IN TABLE

EC NO: 736602
DRWN: RSCHIEBER 2023/01/30
CHK'D: RSILLER 2023/01/31
APPR: RSILLER 2023/01/31

INITIAL REVISION:
DRWN: FDAFERNER 2021/02/16
APPR: RSILLER 2022/07/13

molex

REC U12 XP XC FE PG9 FM WIR BRASS NI XM

PRODUCT CUSTOMER DRAWING

| DOCUMENT NUMBER | DOC TYPE | DOC PART | REVISION |
|---|---|---|---|
| 1204040011 | PSD | 000 | A1 |

| THIRD ANGLE PROJECTION | DRAWING | SERIES | MATERIAL NUMBER | CUSTOMER | SHEET NUMBER |
|---|---|---|---|---|---|
| | A3-SIZE | 120404 | SEE PART LIST | GENERAL MARKET | 3 OF 3 |

| DOCUMENT STATUS | P1 | RELEASE DATE | 2023/01/31 08:21:37 |
|---|---|---|---|

FORMAT: master-Sheet-A3
REVISION: J
DATE: 2020/01/14